LIBERTY SERIES - LL3

Progressive Cavity Pump

CALL TOLL FREE 877-742-2878
FOR SALES AND SUPPORT

Return to BurtProcess.com

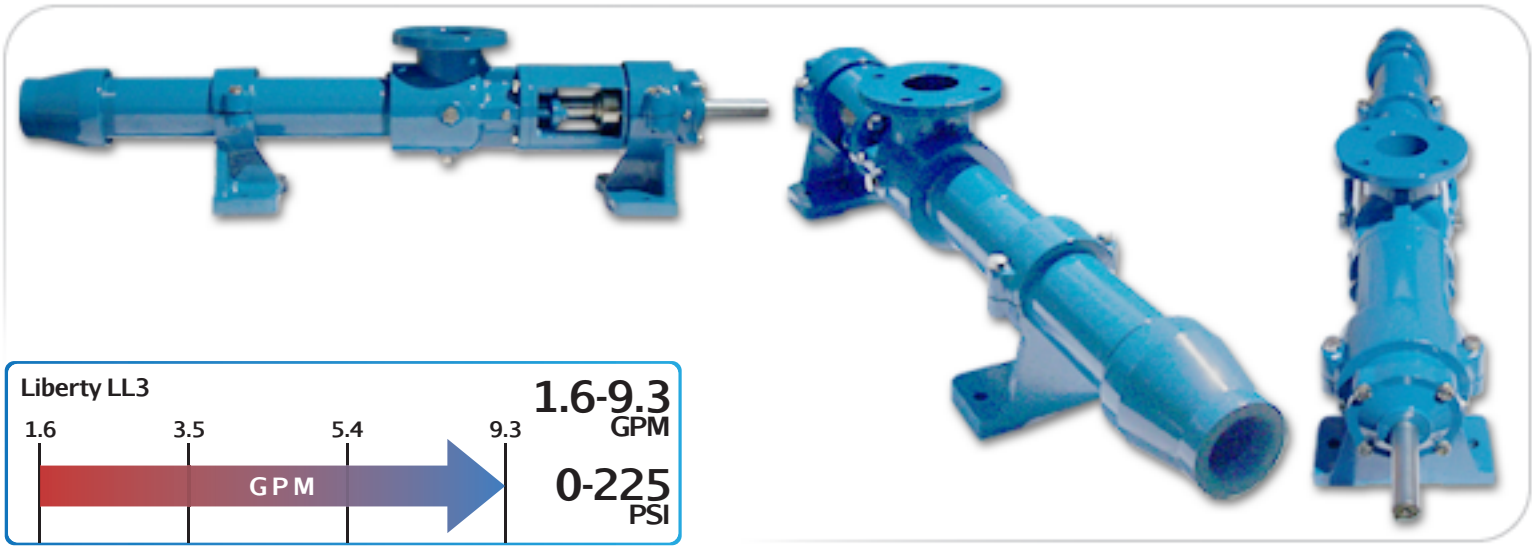

Features

- Modular Design
- Maintenance Free
- Easy Assembly/Disassembly
- Simple Pin-Joint Connection
- Non-Pulsating Low Shear
- NPT Discharge Connection
- Can Be Run In Either Direction

Materials

Rotor: *Tool Steel & Stainless Steel, Chrome-Plated*

Stator: *Buna, Rubber, Viton™, EPDM*

Motor: *1/2, 3/4, 1, 1.5, and 2 hp*

Inlet: *1-1/2"*

Outlet: *1-1/4"*

Bases: *Steel and Stainless Steel*

Curves

Click Links Below

1-Stage	2-Stage	3-Stage
1LL3	**2LL3**	**3LL3**

Drawings

Click Links Below

1-Stage	2-Stage	3-Stage
1LL3	**2LL3**	**3LL3**

Pump Description

The Liberty LL3 Progressive Cavity Pump is an affordable, maintenance free, dependable drop-in replacement non-pulsating progressive cavity pump which is an ideal solution for your low-flow rate and high viscosity pumping applications. It is ideal for pumping the latex in the carpet manufacturing industry such as adhesives, backing and filler materials as well as other viscous, abrasive liquids and solutions.

The LL3 Series PC Pump is a standard flanged pump design with a body made in either Cast Iron or 316 Stainless Steel. The LL Series Pump unit is a modular design with a simple pinned-joint drive assembly and is designed for either 1, 2, or 3 pumping stages for 75, 150 or 225 psi discharge pressures.

Standard LL3 Series PC Pump Rotors are Chrome Plated Hardened Tool Steel or Chrome Plated 316 Stainless Steel. All other internal pump wetted parts are Steel or 316 Stainless Steel and made for durability and use in the harshest manufacturing and pumping environments.

The LL3 Series Progressive Cavity Pump Stators come in a wide variety of elastomer materials depending on your application such as Buna Nitrile, Natural Rubber, EPDM and Viton for long usage. The standard seal design option for the LL3 series is a set of gland packing with Lantern Ring and flush connections.

Mechanical seal assembly retrofits are readily available and can be selected at the time of your order based upon your pumping applications. The Liberty LL3 Progressive Cavity Pump parts are direct aftermarket replacements that work with the Moyno® L3 Series, Tarby® TL3 Series and Continental® CL3 Series.*

Contact a Liberty Process representative today for more information about the LL3 Series.

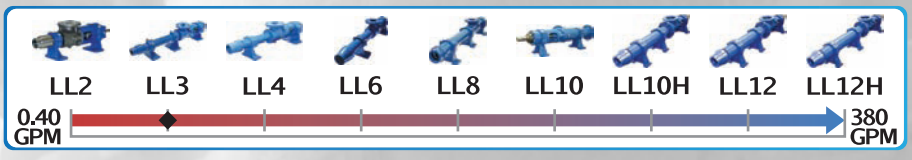

P: 847.640.7867 F: 847.640.7855
2525 Clearbrook Drive Arlington Heights, IL 60005

LIBERTY SERIES - ILL3

Progressive Cavity Pump

Performance Curves

RPM	200	400	600	800	1000	1200
NPSH REQ'D	.6	1.3	2	2.6	3.2	3.9
MIN. HP	1/4	1/3	1/3	1/2	3/4	3/4

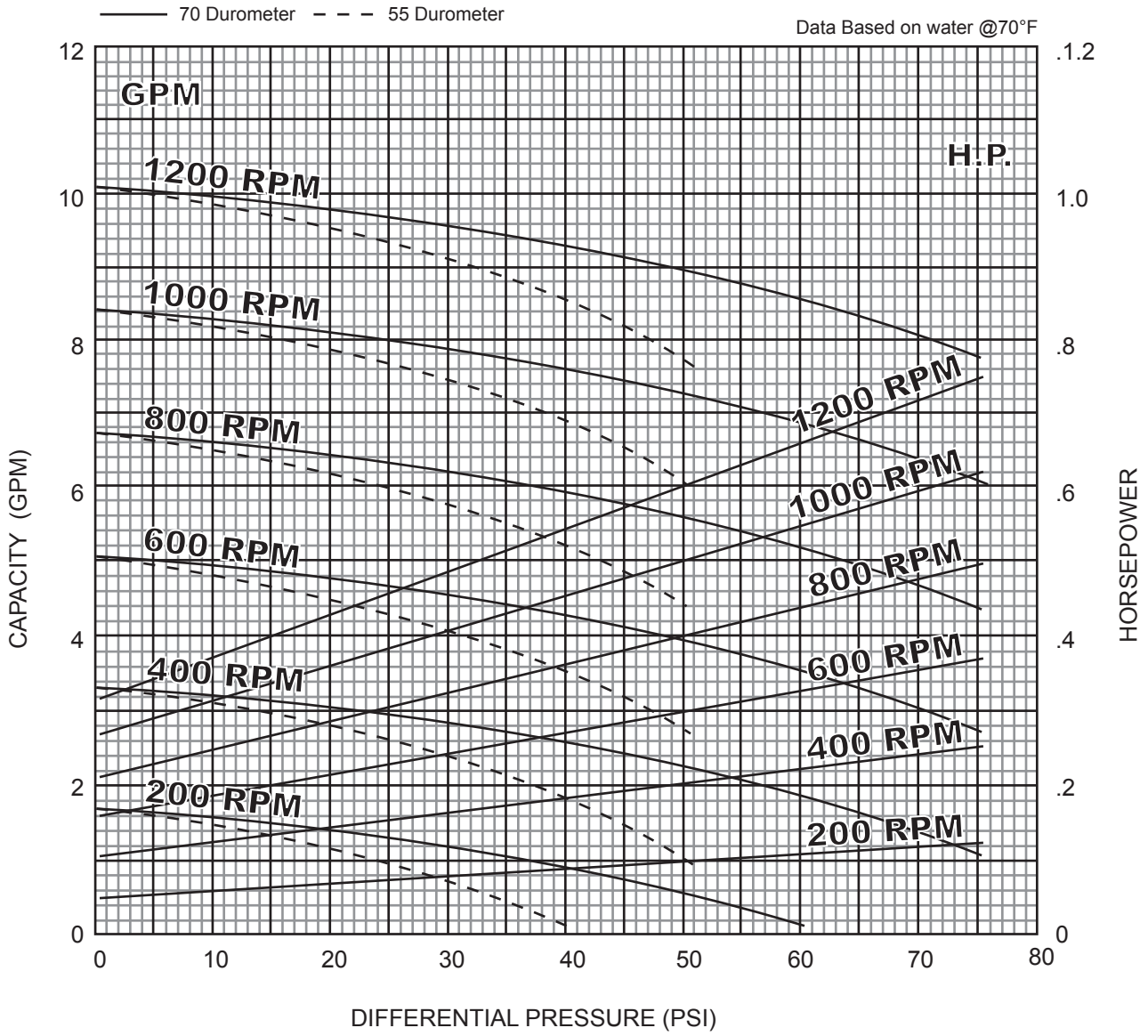

1 Stage Pump

BACK TO TOP

P: 847.640.7867 F: 847.640.7855
2525 Clearbrook Drive Arlington Heights, IL 60005

LIBERTY SERIES - 2LL3

Progressive Cavity Pump

Performance Curves

RPM	200	400	600	800	1000	1200
NPSH REQ'D	.6	1.3	2	2.6	3.2	3.9
MIN. HP	1/4	1/3	1/2	3/4	1	1

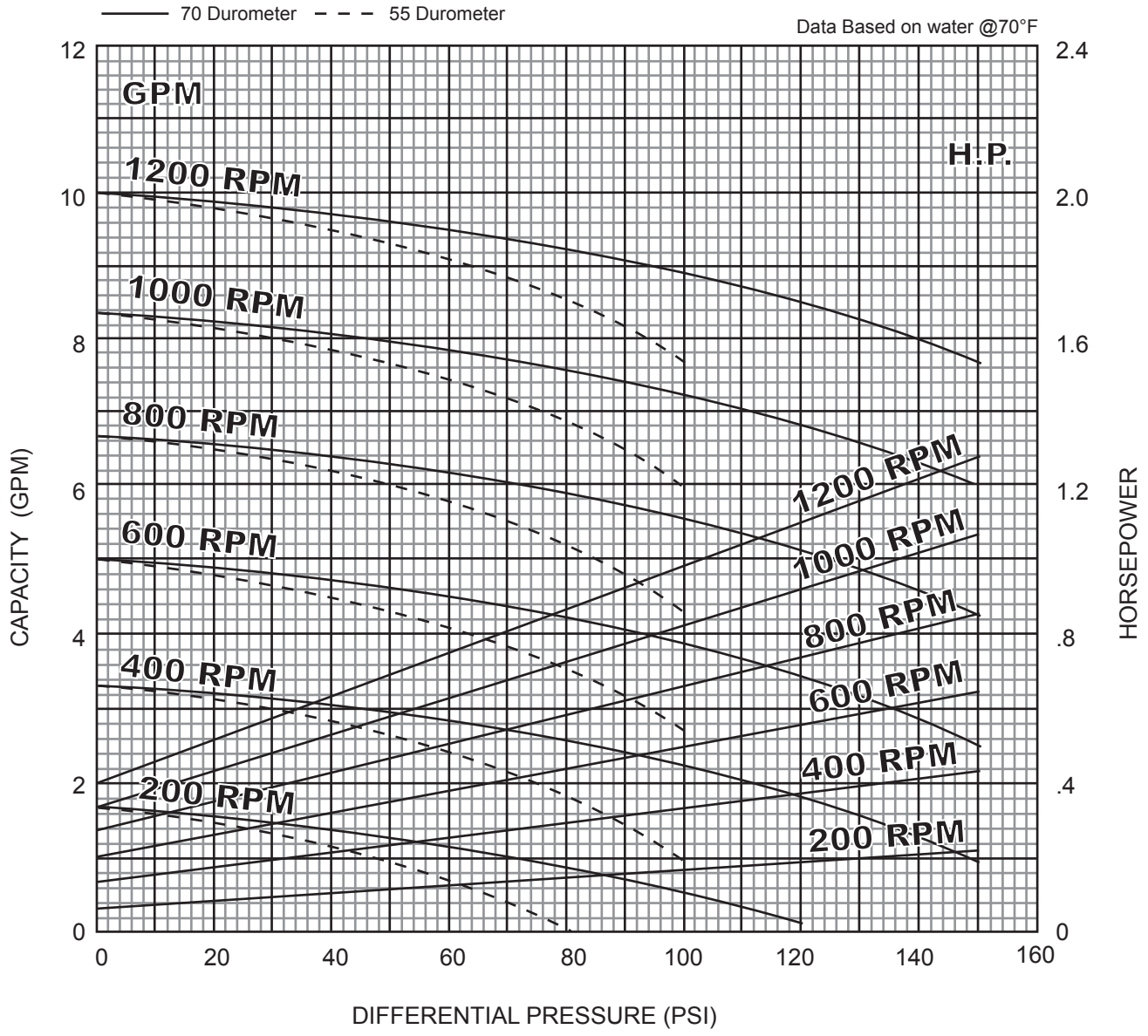

2 Stage Pump

BACK TO TOP

P: 847.640.7867 F: 847.640.7855
2525 Clearbrook Drive Arlington Heights, IL 60005
www.libertyprocess.com

LIBERTY SERIES - 3LL3

Progressive Cavity Pump

Performance Curves

RPM	200	400	600	800	1000	1200
NPSH REQ'D	.6	1.3	2	2.6	3.2	3.9
MIN. HP	1/4	1/3	1/3	1/2	3/4	3/4

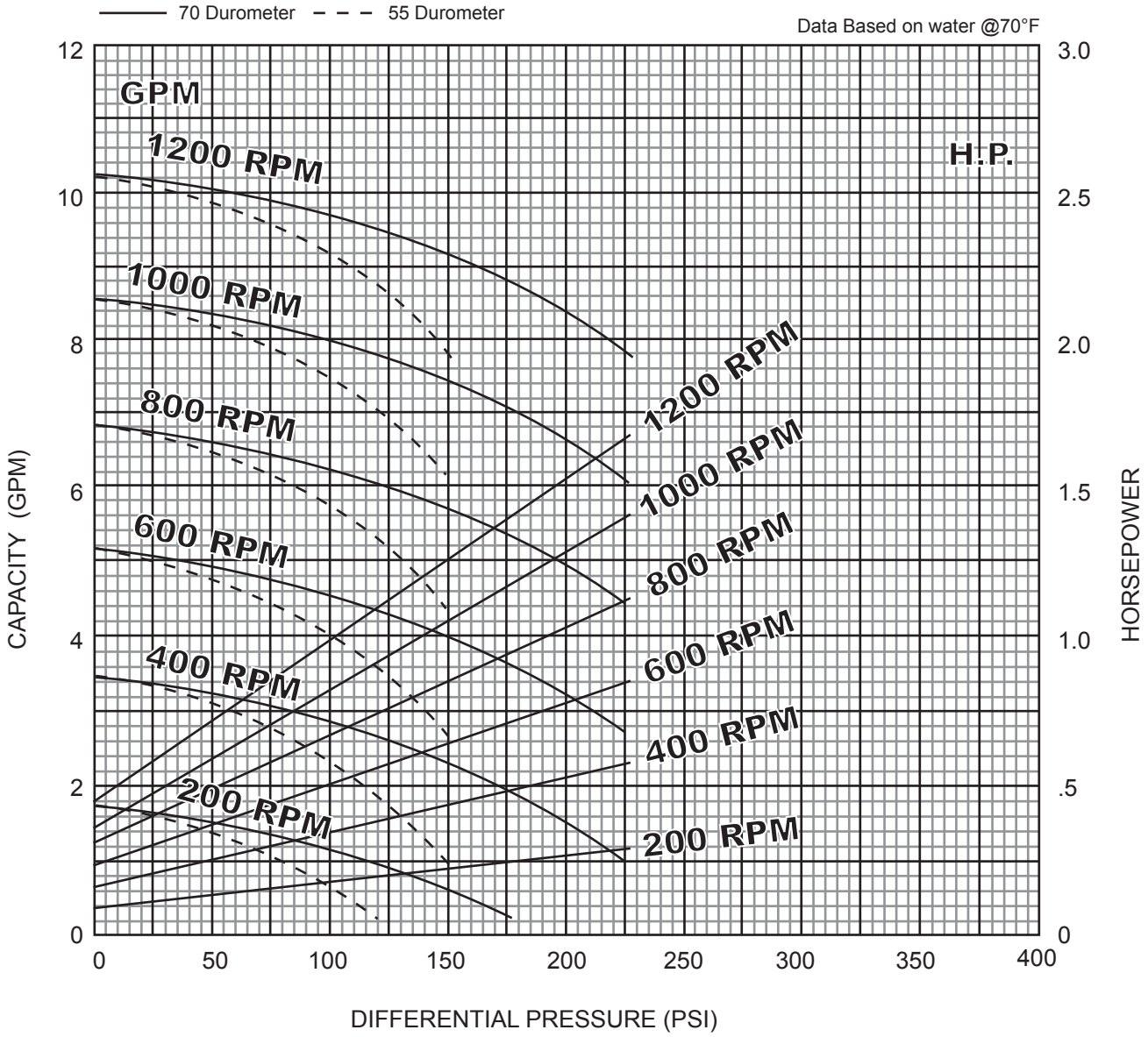

3 Stage Pump

BACK TO TOP

P: 847.640.7867 F: 847.640.7855
2525 Clearbrook Drive Arlington Heights, IL 60005
www.libertyprocess.com

LIBERTY SERIES - ILL3

Progressive Cavity Pump

Dimensional Drawings

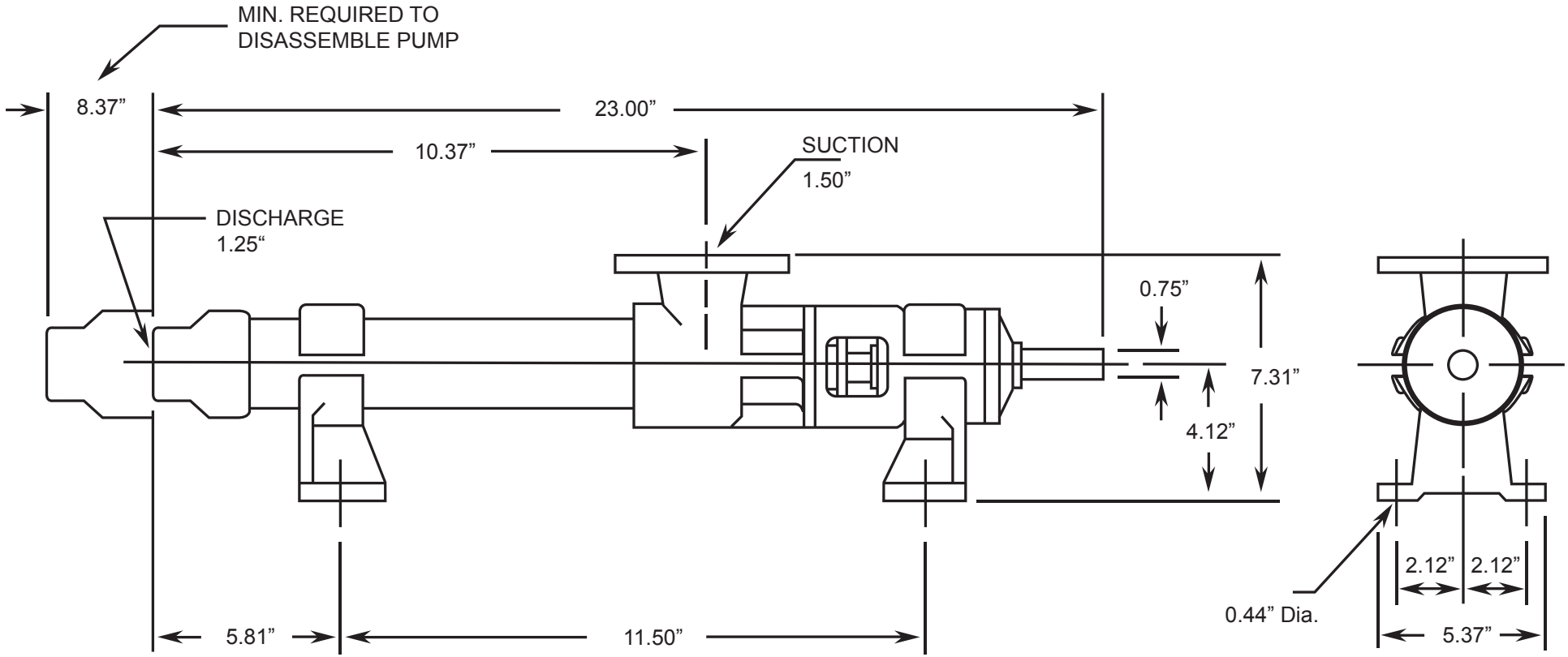

Net weight
≈ lbs.
47

ALL DIMN: Inches

BACK TO TOP

1 Stage Pump

P: 847.640.7867 F: 847.640.7855
2525 Clearbrook Drive Arlington Heights, IL 60005
www.libertyprocess.com

LIBERTY SERIES - 2LL3

Progressive Cavity Pump

Dimensional Drawings

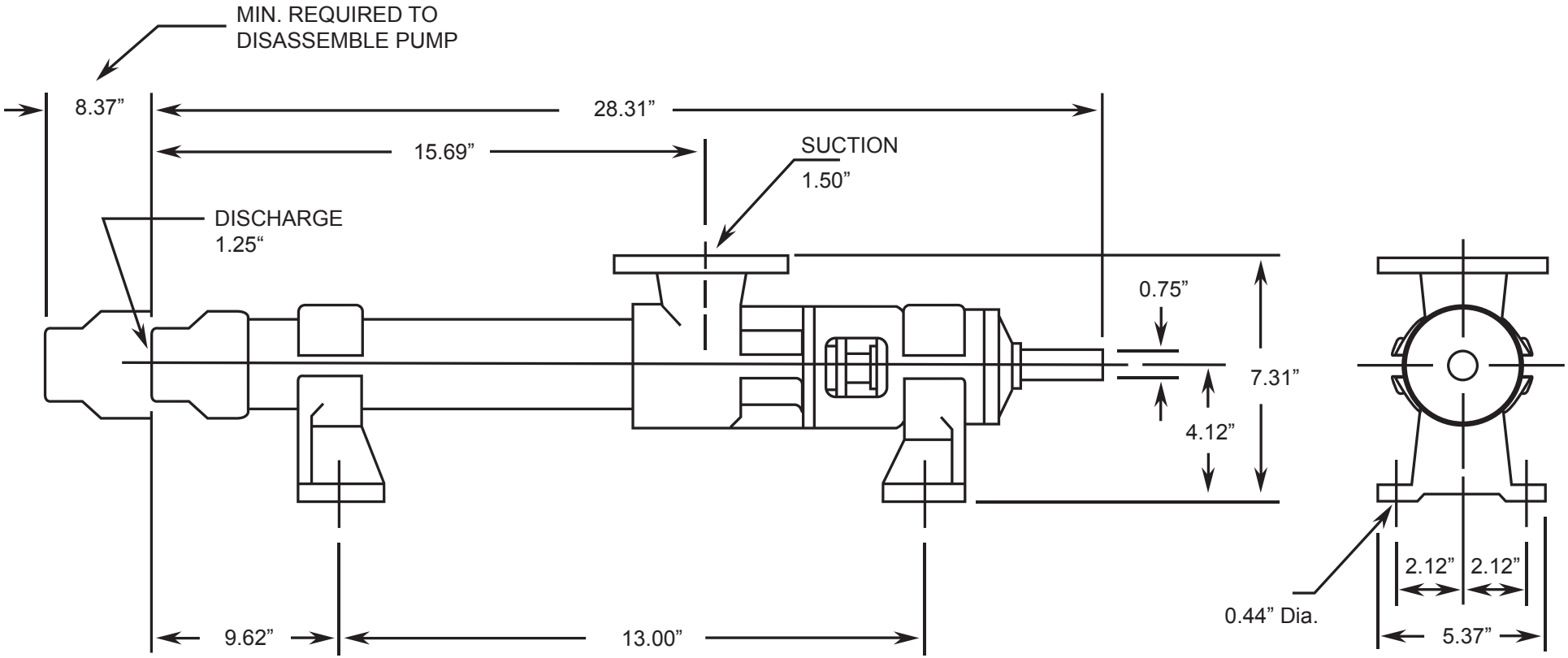

Net weight
≈ lbs.
51

ALL DIMN: Inches

BACK TO TOP

2 Stage Pump

P: 847.640.7867 F: 847.640.7855
2525 Clearbrook Drive Arlington Heights, IL 60005
www.libertyprocess.com

LIBERTY SERIES - 3LL3

Progressive Cavity Pump

Dimensional Drawings

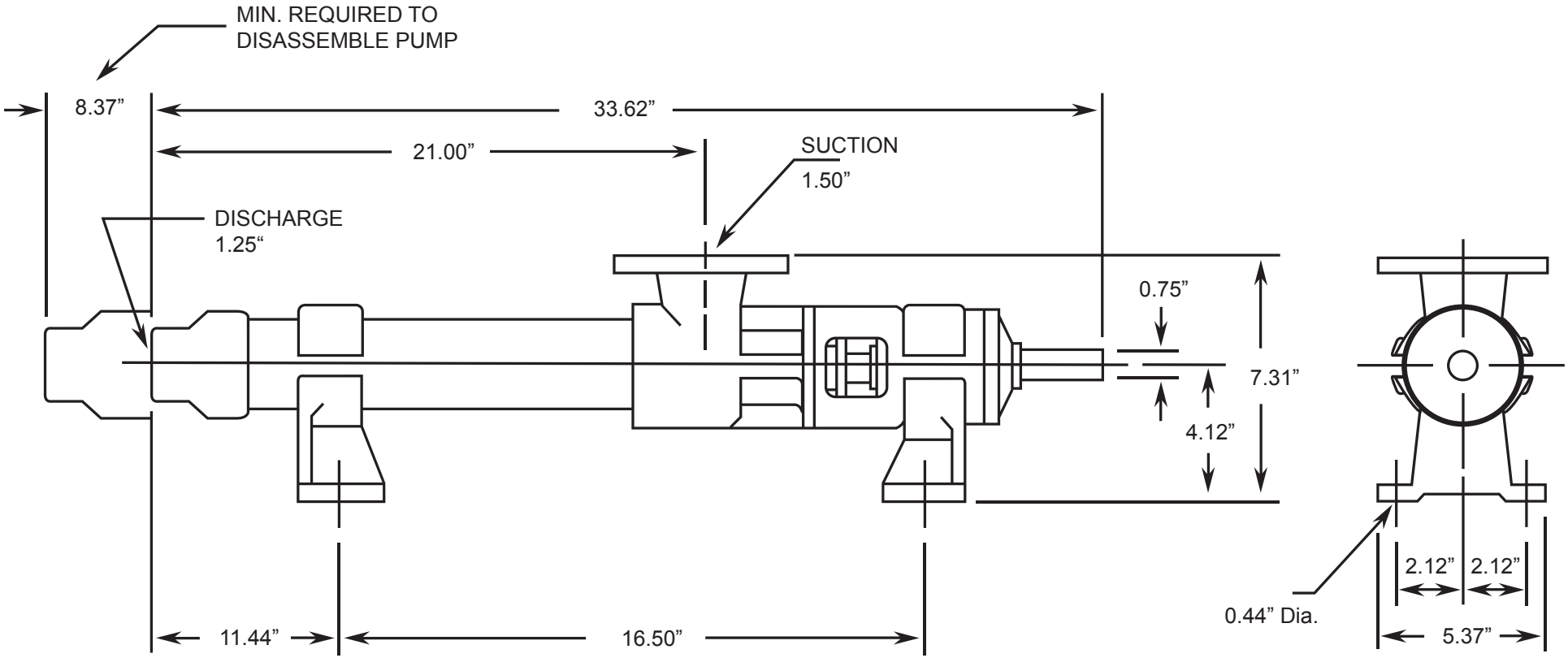

Net weight
≈ lbs.
55

ALL DIMN: Inches

BACK TO TOP

3 Stage Pump

P: 847.640.7867 F: 847.640.7855
2525 Clearbrook Drive Arlington Heights, IL 60005
www.libertyprocess.com