LIBERTY SERIES - LL4

Progressive Cavity Pump

CALL TOLL FREE 877-742-2878
FOR SALES AND SUPPORT
Return to BurtProcess.com

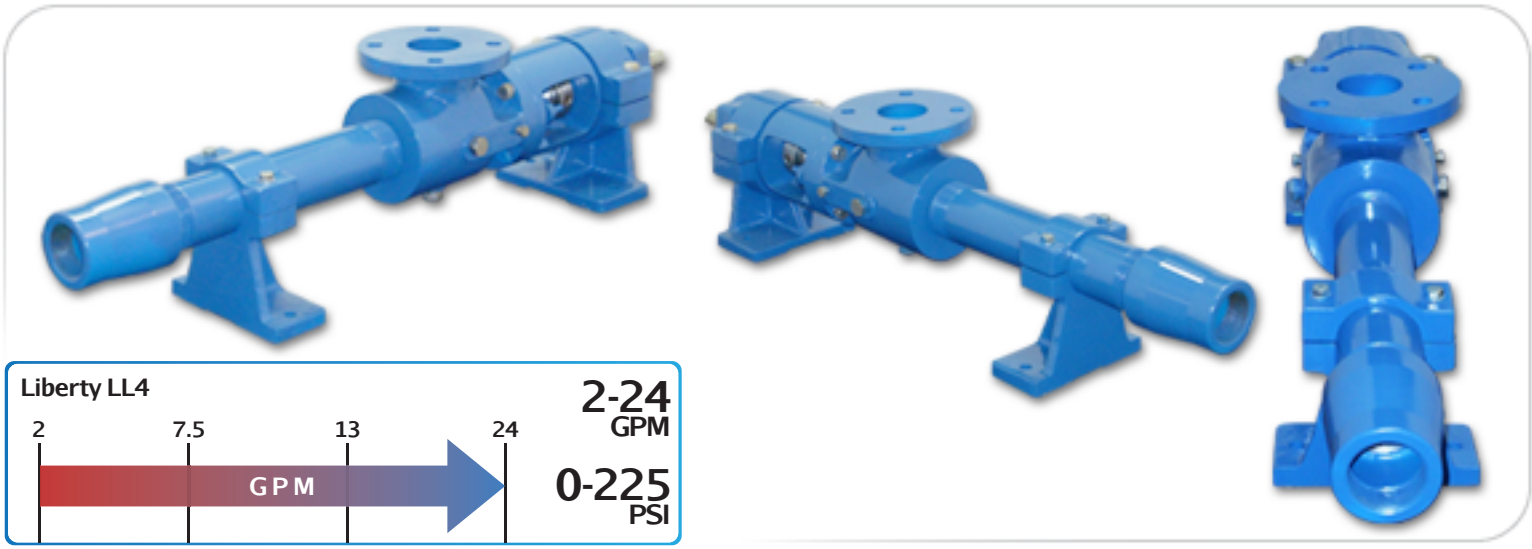

Features

- Modular Design
- Maintenance Free
- Easy Assembly/Disassembly
- Simple Pin-Joint Connection
- Non-Pulsating Low Shear
- NPT Discharge Connection
- Can Be Run In Either Direction

Materials

Rotor: *Tool Steel & Stainless Steel, Chrome-Plated*

Stator: *Buna, Rubber, Viton™, EPDM*

Motor: *1/2, 3/4, 1, 1.5, and 2 hp*

Inlet: *2-1/2"*

Outlet: *2"*

Bases: *Carbon and Stainless Steel*

Curves

Click Links Below

1-Stage	2-Stage	3-Stage
1LL4	**2LL4**	**3LL4**

Drawings

Click Links Below

1-Stage	2-Stage	3-Stage
1LL4	**2LL4**	**3LL4**

Pump Description

The Liberty LL4 Progressive Cavity Pump is an ideal low-costing progressive cavity pump for abrasive and wearing applications like grouting and other abrasive slurry mixtures. The LL4 Series PC Pump is a standard flanged pump design manufactured with cast iron or 316 stainless steel casings and designed in 1, 2, and 3 stages for 75, 150, and 225 psi discharge pressures pumping from 0-24 GPM. (2.02 Gallons per 100 revolutions)

The pump units modular design with simple hardened pinned joint drive assembly ensures ease of use with increased durability. The LL4 Series Progressive Cavity Pump Rotors are typically tool steel or 316 stainless steel with a hard chrome plating. All other wetted parts are either carbon steel or 316 stainless steel. Stators are available in many elastomer materials such as buna, natural rubber, epdm and viton depending upon application.

The standard seal design is a set of packing rope; however, mechanical seal assembly retrofits are readily available. The Liberty LL4 Progressive Cavity Pump parts are direct aftermarket replacements that work with the Moyno™ L4 Series, Tarby™ TL4 Series and Continental™ CL4 Series.*

Please contact Liberty process Equipment Today for more information on the LL4 Liberty Series of Progressive Cavity Pumps.

Contact a Liberty Process representative today for more information about the LL4 Series.

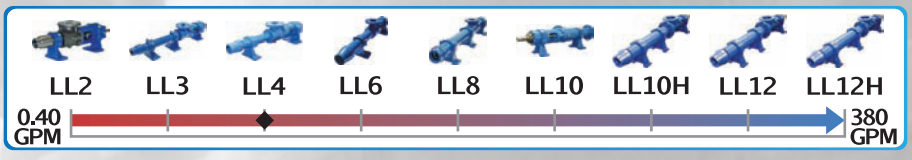

P: 847.640.7867 F: 847.640.7855
2525 Clearbrook Drive Arlington Heights, IL 60005

LIBERTY SERIES - ILL4

Progressive Cavity Pump

Performance Curves

RPM	200	400	600	800	1000	1200
NPSH REQ'D	.9	1.7	2.6	3.4	4.8	6.7
MIN. HP	1/3	1/2	1/2	3/4	1	1

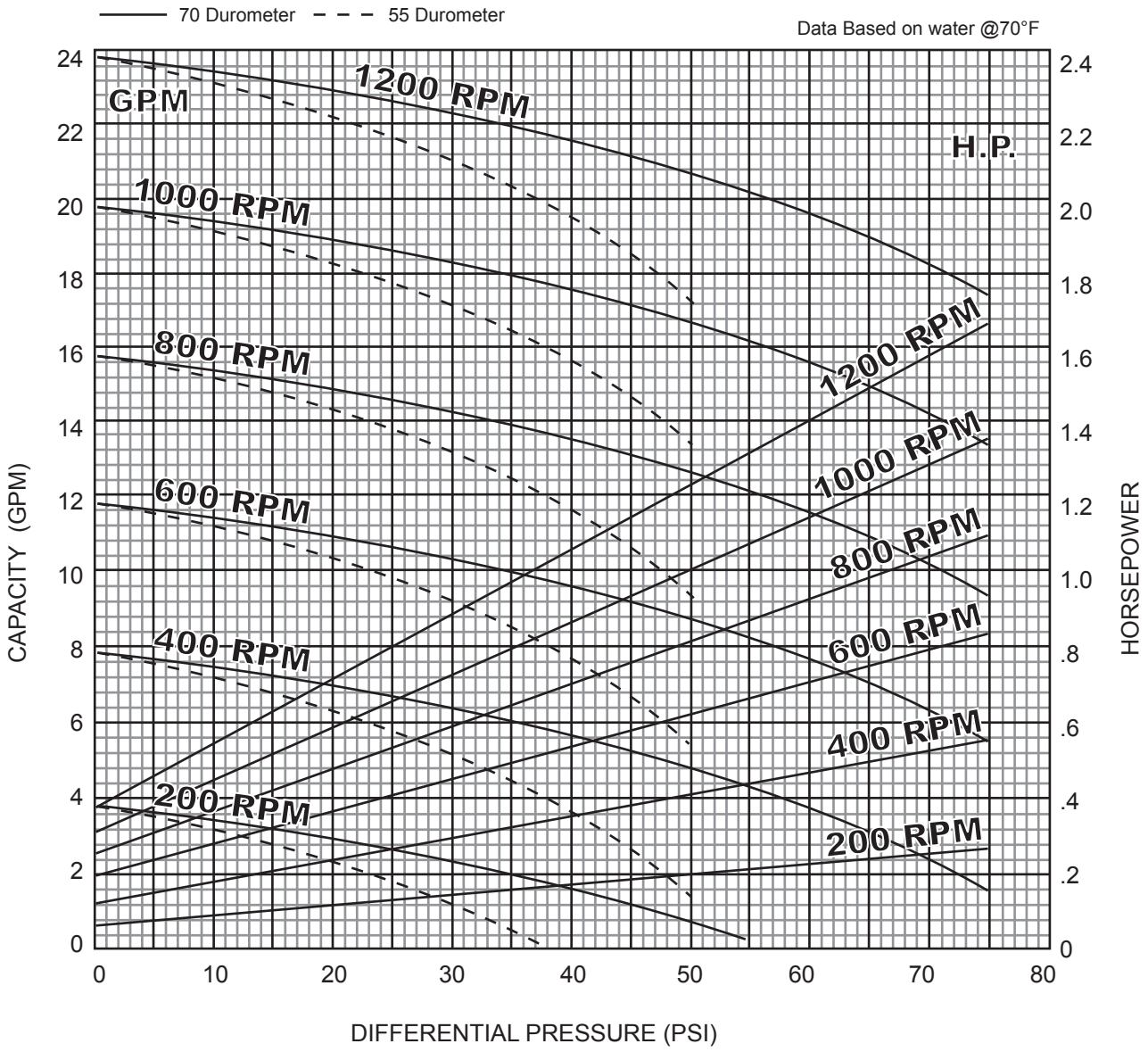

1 Stage Pump

BACK TO TOP

P: 847.640.7867 F: 847.640.7855
2525 Clearbrook Drive Arlington Heights, IL 60005

LIBERTY SERIES - 2LL4

Progressive Cavity Pump

Performance Curves

RPM	200	400	600	800	1000	1200
NPSH REQ'D	.9	1.7	2.6	3.4	4.8	6.7
MIN. HP	1/3	1/2	3/4	1	1-1/2	1-1/2

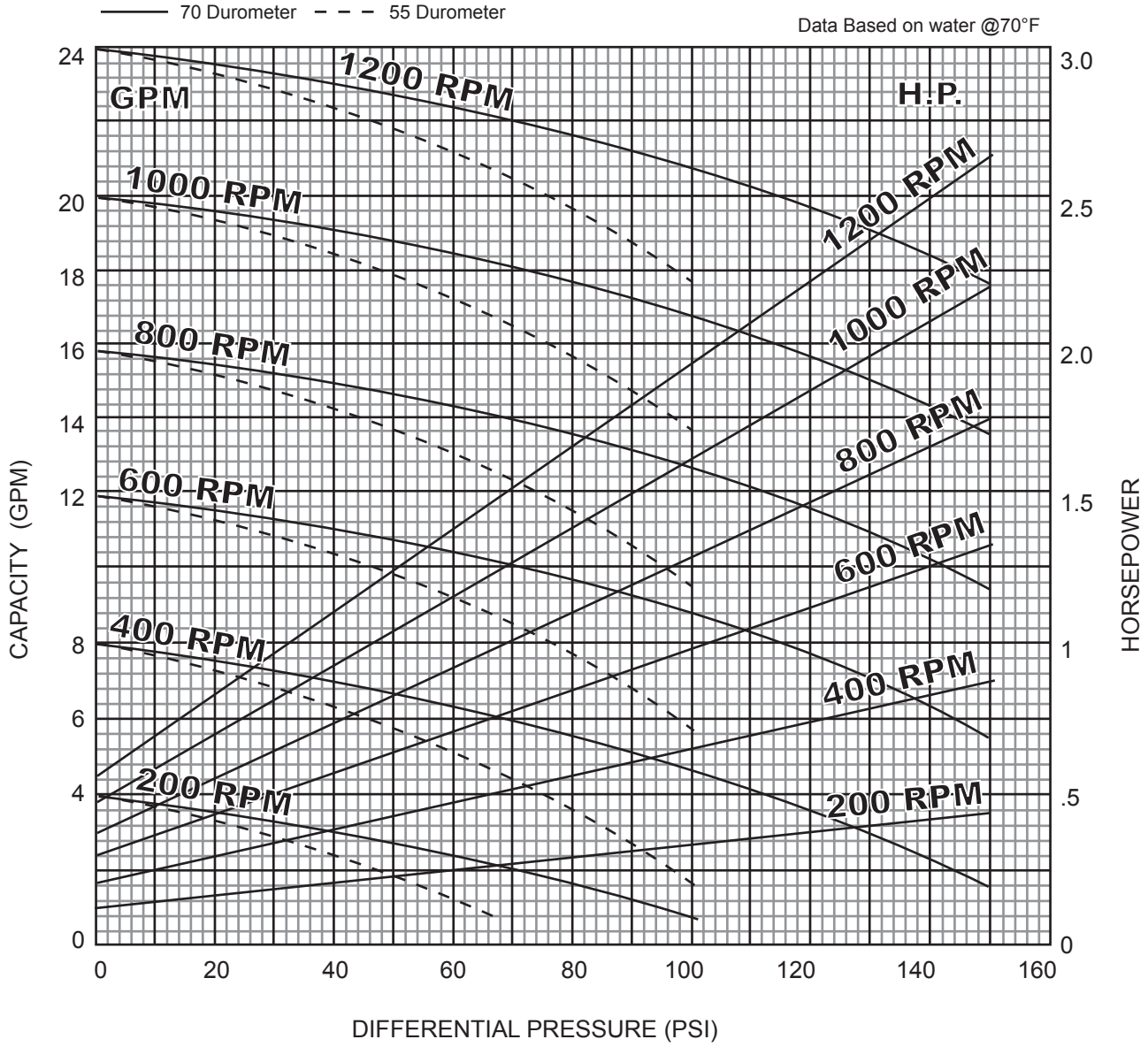

2 Stage Pump

BACK TO TOP

P: 847.640.7867 F: 847.640.7855
2525 Clearbrook Drive Arlington Heights, IL 60005
www.libertyprocess.com

LIBERTY SERIES - 3LL4

Progressive Cavity Pump

Performance Curves

RPM	200	400	600	800	1000	1200
NPSH REQ'D	.9	1.7	2.6	3.4	4.8	6.7
MIN. HP	1/2	3/4	1	1-1/2	2	2

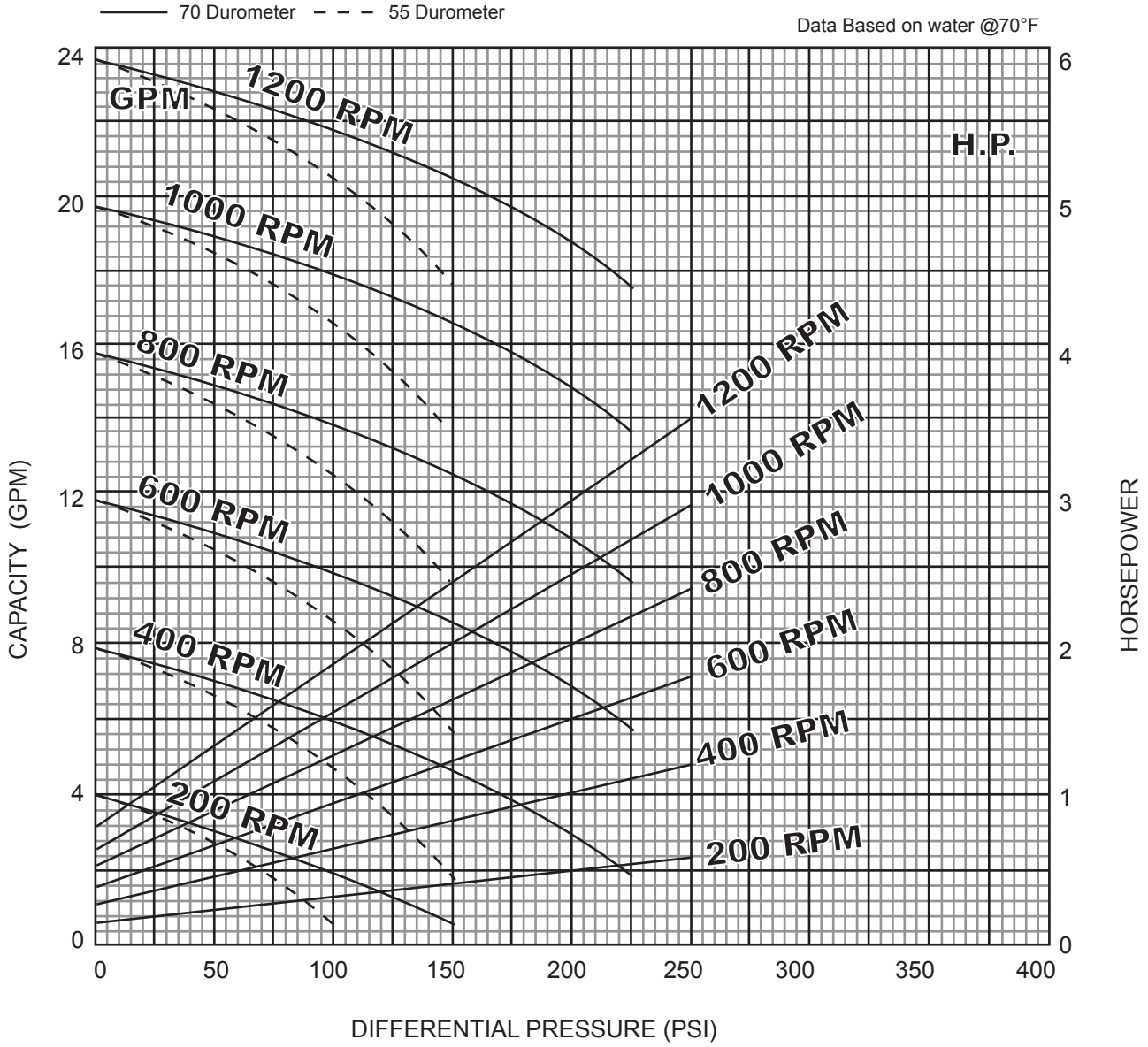

3 Stage Pump

BACK TO TOP

P: 847.640.7867 F: 847.640.7855
2525 Clearbrook Drive Arlington Heights, IL 60005
www.libertyprocess.com

LIBERTY SERIES - ILL4

Progressive Cavity Pump

Dimensional Drawings

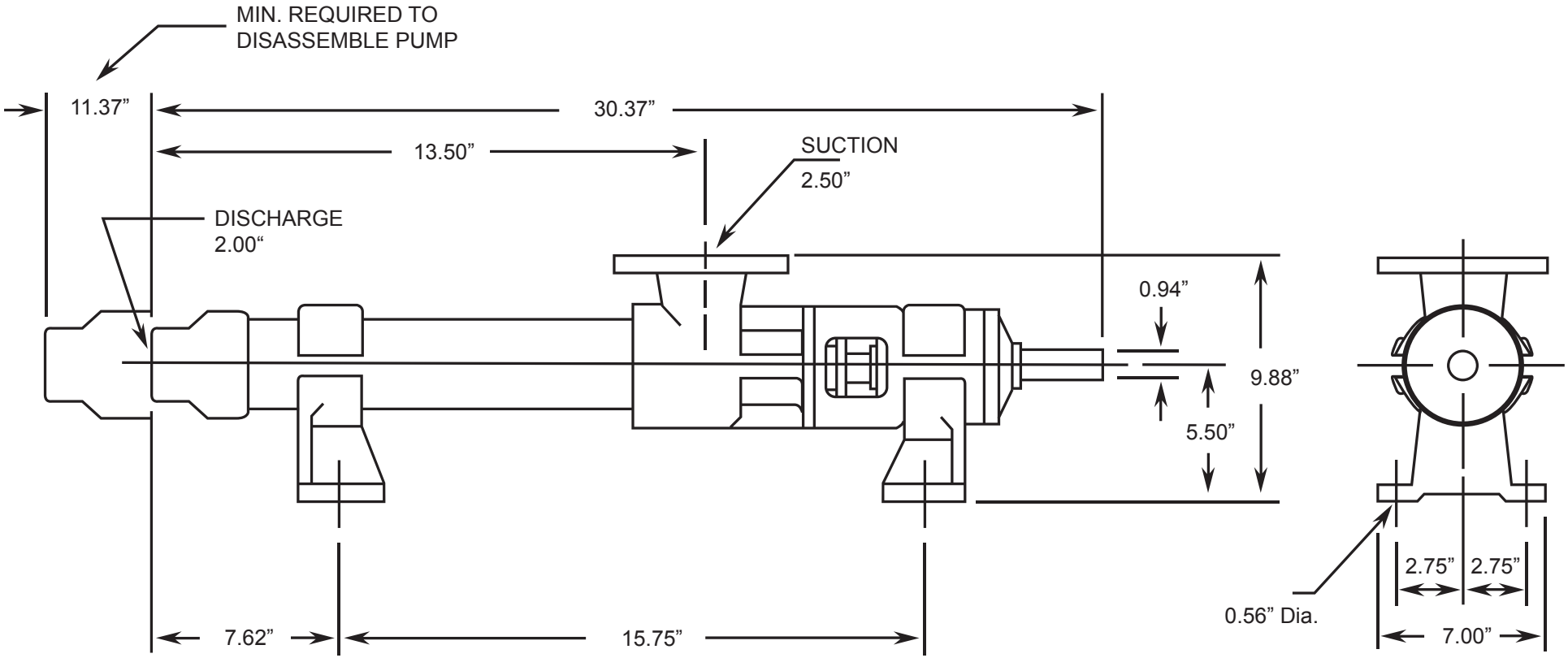

Net weight
≈ lbs.
85

ALL DIMN: Inches

BACK TO TOP

1 Stage Pump

P: 847.640.7867 F: 847.640.7855

2525 Clearbrook Drive Arlington Heights, IL 60005

www.libertyprocess.com

LIBERTY SERIES - 2LL4

Progressive Cavity Pump

Dimensional Drawings

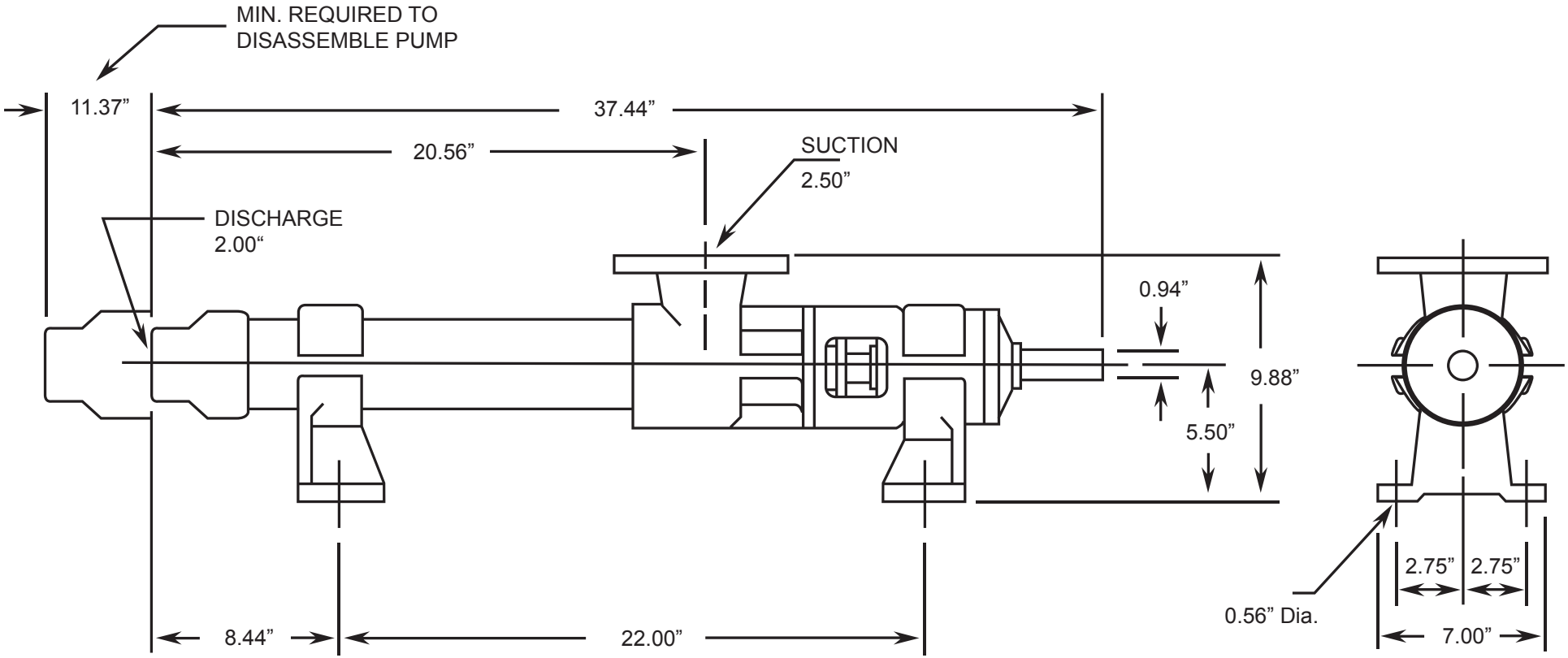

Net weight
≈ lbs.
91

ALL DIMN: Inches

BACK TO TOP

2 Stage Pump

P: 847.640.7867 F: 847.640.7855
2525 Clearbrook Drive Arlington Heights, IL 60005
www.libertyprocess.com

LIBERTY SERIES - 3LL4

Progressive Cavity Pump

Dimensional Drawings

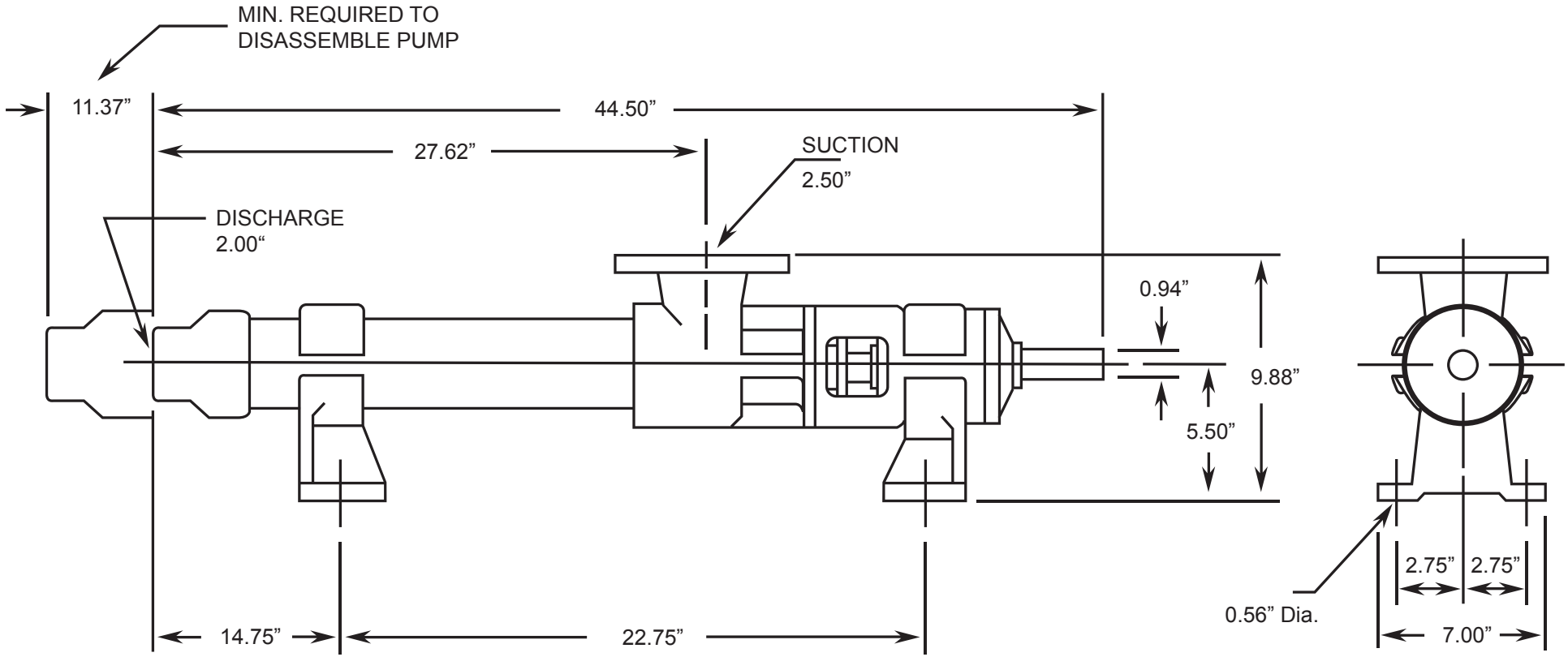

Net weight
≈ lbs.
97

ALL DIMN: Inches

BACK TO TOP

3 Stage Pump

P: 847.640.7867 F: 847.640.7855

2525 Clearbrook Drive Arlington Heights, IL 60005

www.libertyprocess.com