LIBERTY SERIES - LL6

Progressive Cavity Pump

CALL TOLL FREE 877-742-2878
FOR SALES AND SUPPORT
Return to BurtProcess.com





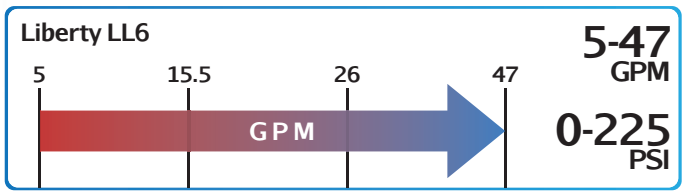

Features

- Modular Design
- Maintenance Free
- Easy Assembly/Disassembly
- Simple Pin Joint Design
- Non-Pulsating Low Shear
- NPT Discharge Connection
- Can Be Run In Either Direction

Materials

Rotor: *Tool Steel & Stainless Steel, Chrome-Plated*

Stator: *Buna, Rubber, Viton™, EPDM*

Motor: *1.5, 2, 3, and 5 hp*

Inlet: *3"*

Outlet: *2-1/2"*

Bases: *Carbon and Stainless Steel*

Curves

Click Links Below

1-Stage	2-Stage	3-Stage
1LL6	**2LL6**	**3LL6**

Drawings

Click Links Below

1-Stage	2-Stage	3-Stage
1LL6	**2LL6**	**3LL6**

Pump Description

The Liberty LL6 Progressive Cavity Pump is a low-cost, maintenance free, dependable drop-in replacement pump and is an ideal pump unit for abrasive pump applications such as the mud rotary drilling process for well drilling geotechnical and environment industrial applications due to its robust construction and design.

The Liberty LL6 Series PC Pump is a standard flanged progressive cavity pump manufactured with cast iron or 316 stainless steel casings and designed in 1, 2, and 3 stages for 75, 150, and 225 psi discharge pressures. Higher discharge pressures are available, please contact a Liberty representative for more information.

Flow rates to be achieved from 0-47 GPM (5.20 Gallons per 100 revolutions). The pump units modular design with simple hardened pinned joint drive assembly is a proven design that can handle the most difficult pumping applications. The LL6 Series Progressive Cavity Pump Rotors are typically tool steel or 316 stainless steel with a hard chrome plating for added durability. All other wetted parts are either carbon steel or 316 stainless steel.

The LL6 PC Pump Stators are available in many elastomer materials such as buna, natural rubber, epdm and viton depending upon your application. The standard seal design is a set of gland packing with Lantern Ring and flush connections. Mechanical seal options are readily available.

The Liberty LL6 Progressive Cavity Pump parts are direct aftermarket replacement pump parts for the Moyno™ L8, Tarby™ TL8 and Continental CL6 Series. Please contact your Liberty Process representative to help you select the pumps and parts that are right for your application and budget!

Contact a Liberty Process representative today for more information about the LL6 Series.

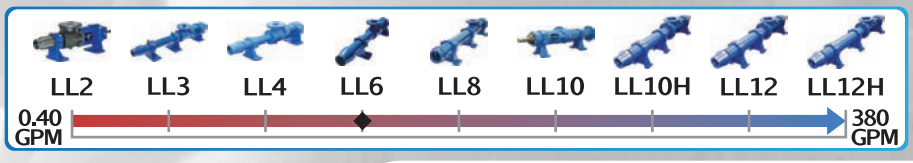

P: 847.640.7867 F: 847.640.7855
2525 Clearbrook Drive Arlington Heights, IL 60005

LIBERTY SERIES - ILL6

Progressive Cavity Pump

Performance Curves

RPM	100	300	500	700	900
NPSH REQ'D	.6	1.7	2.9	4.1	6.9
MIN. HP	1/3	3/4	1	1/1/2	2

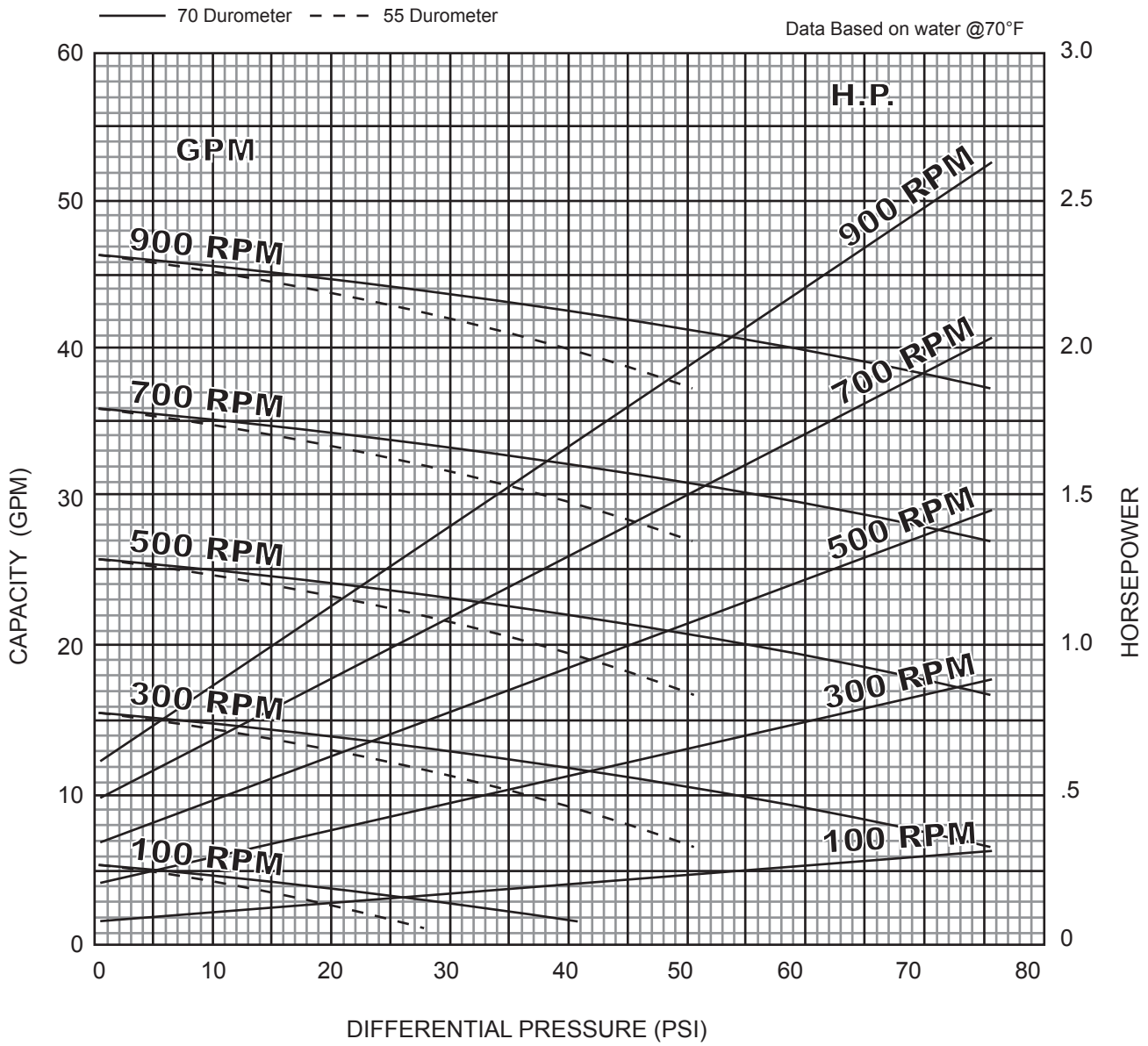

1 Stage Pump

BACK TO TOP

P: 847.640.7867 F: 847.640.7855
2525 Clearbrook Drive Arlington Heights, IL 60005

LIBERTY SERIES - 2LL6

Progressive Cavity Pump

Performance Curves

RPM	100	300	500	700	900
NPSH REQ'D	.6	1.7	2.9	4.1	6.9
MIN. HP	1/2	1/2	2	3	3

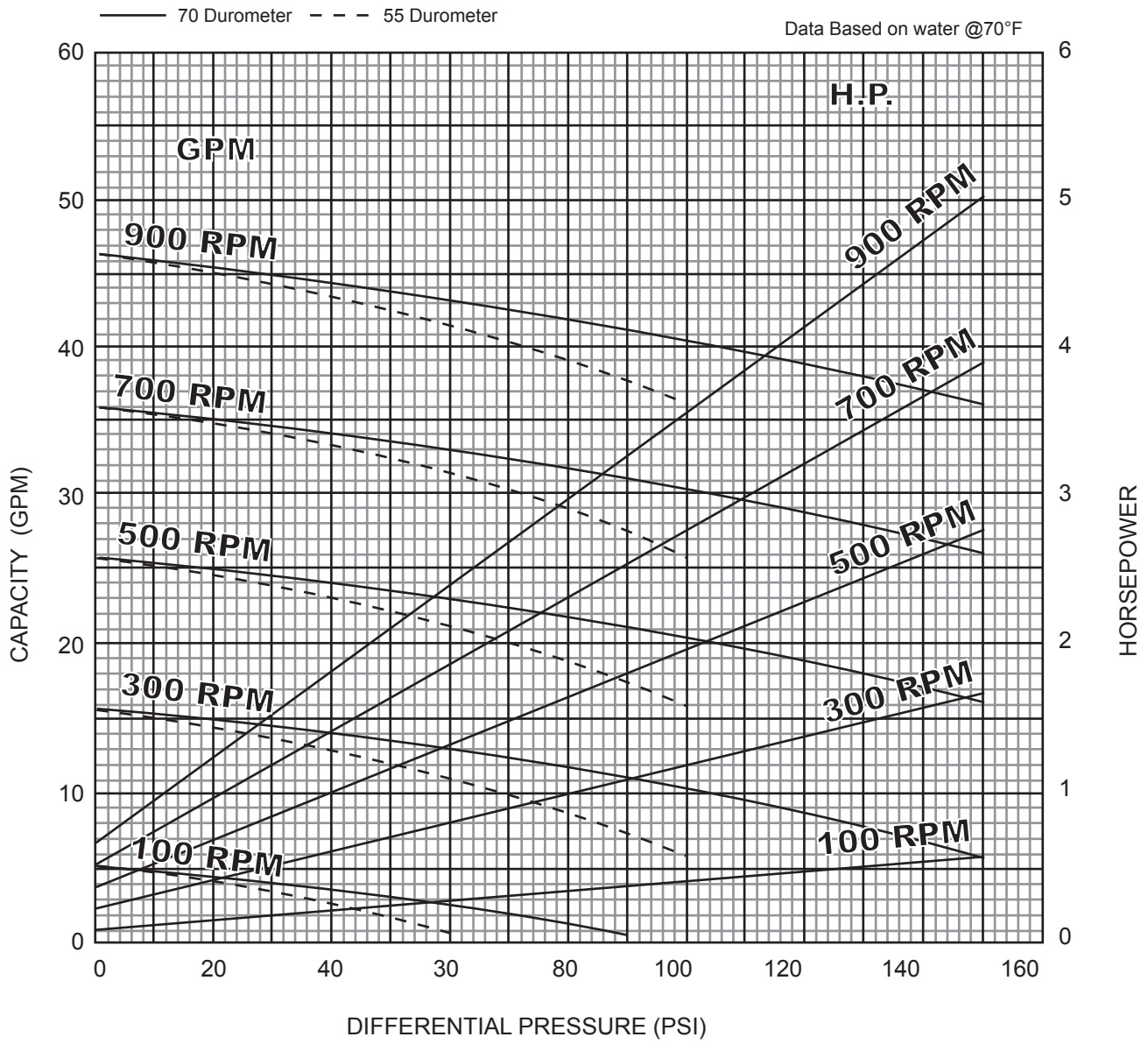

2 Stage Pump

BACK TO TOP

P: 847.640.7867 F: 847.640.7855
2525 Clearbrook Drive Arlington Heights, IL 60005
www.libertyprocess.com

LIBERTY SERIES - 3LL6

Progressive Cavity Pump

Performance Curves

RPM	100	300	500	700	900
NPSH REQ'D	.6	1.7	2.9	4.1	6.9
MIN. HP	1	2	3	4	5

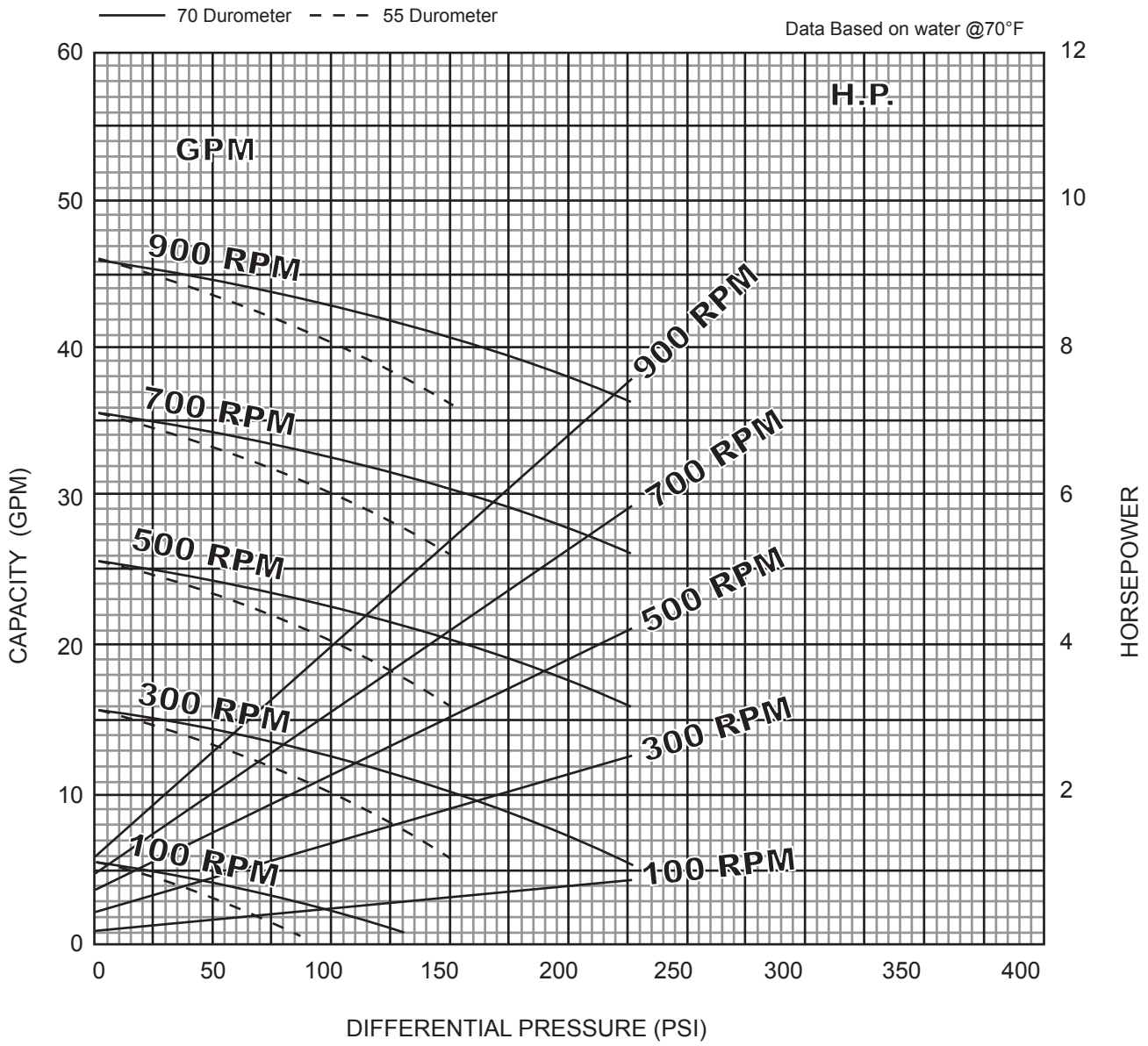

3 Stage Pump

BACK TO TOP

P: 847.640.7867 F: 847.640.7855
2525 Clearbrook Drive Arlington Heights, IL 60005

LIBERTY SERIES - ILL6

Progressive Cavity Pump

Dimensional Drawings

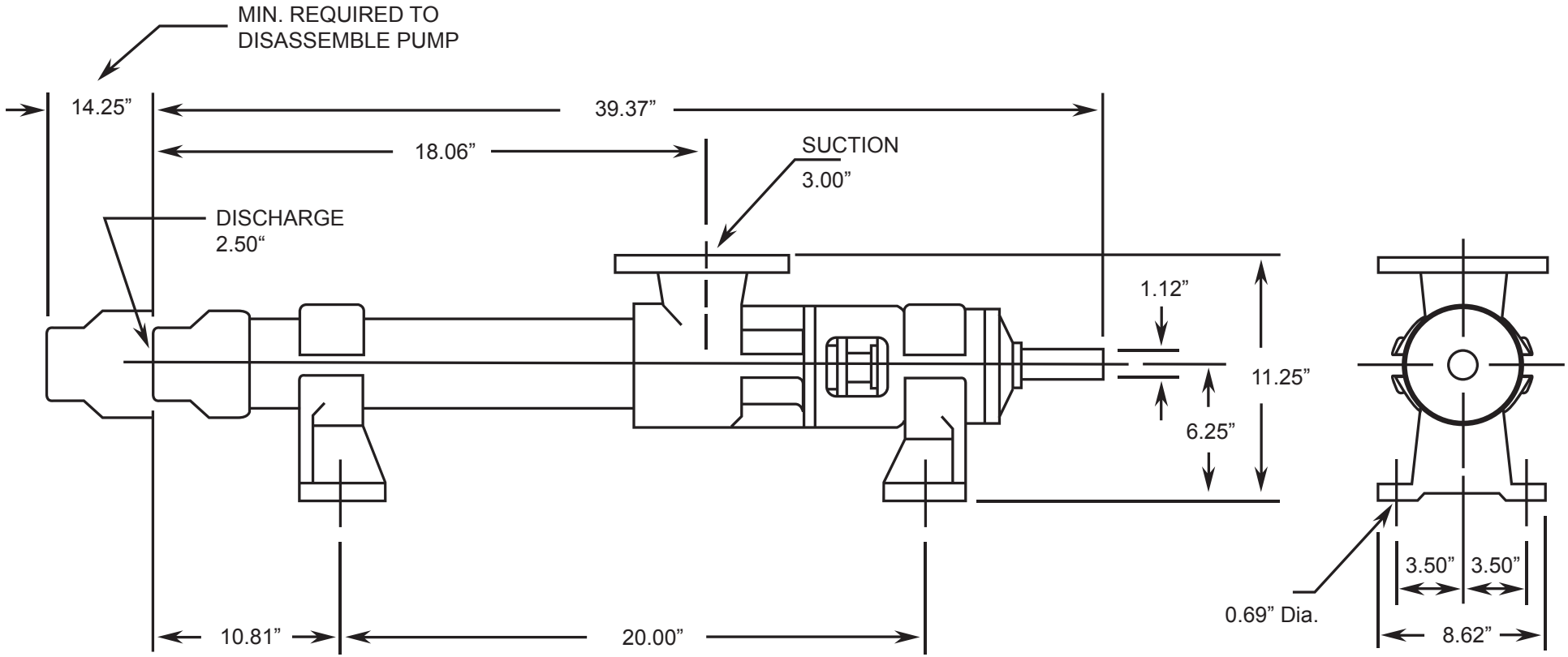

Net weight
≈ lbs.
141

ALL DIMN: Inches

BACK TO TOP

1 Stage Pump

P: 847.640.7867 F: 847.640.7855

2525 Clearbrook Drive Arlington Heights, IL 60005

www.libertyprocess.com

LIBERTY SERIES - 2LL6

Progressive Cavity Pump

Dimensional Drawings

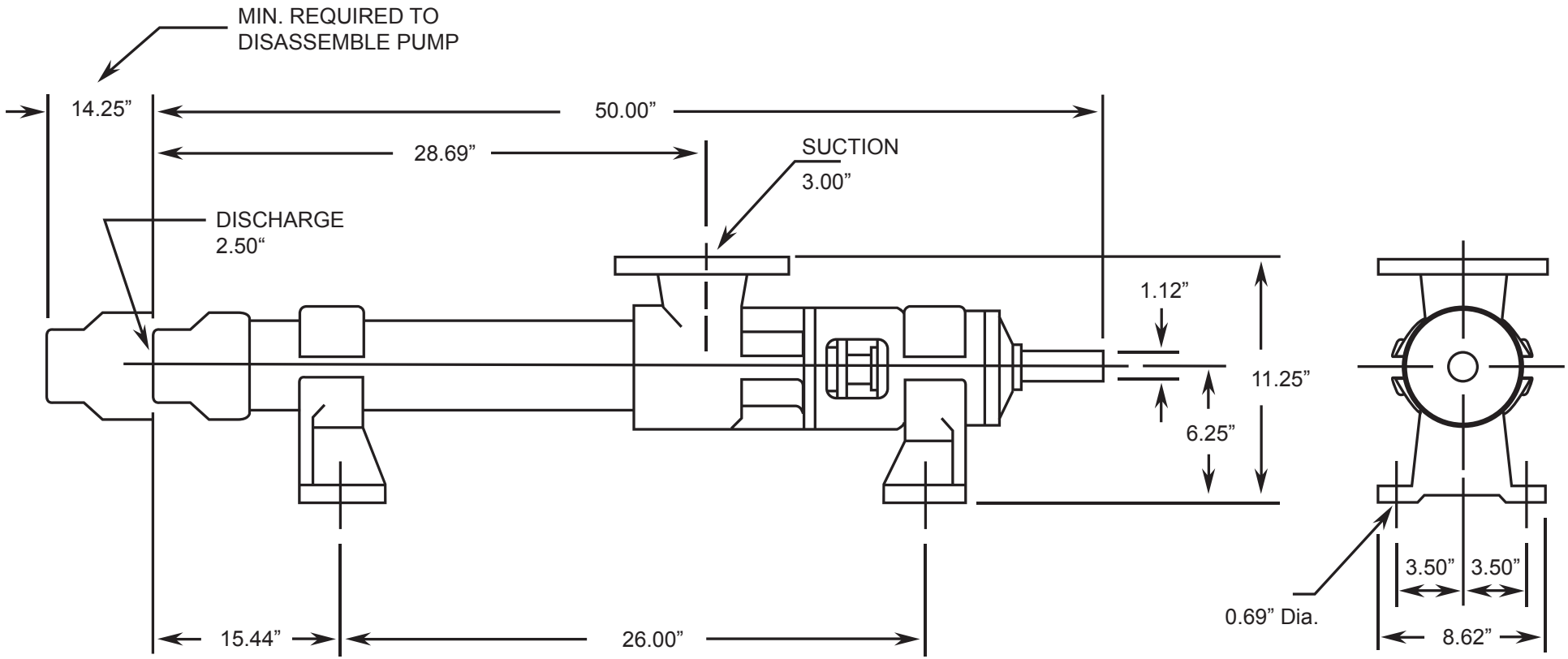

Net weight
≈ lbs.
159

ALL DIMN: Inches

BACK TO TOP

2 Stage Pump

P: 847.640.7867 F: 847.640.7855
2525 Clearbrook Drive Arlington Heights, IL 60005
www.libertyprocess.com

LIBERTY SERIES - 3LL6

Progressive Cavity Pump

Dimensional Drawings

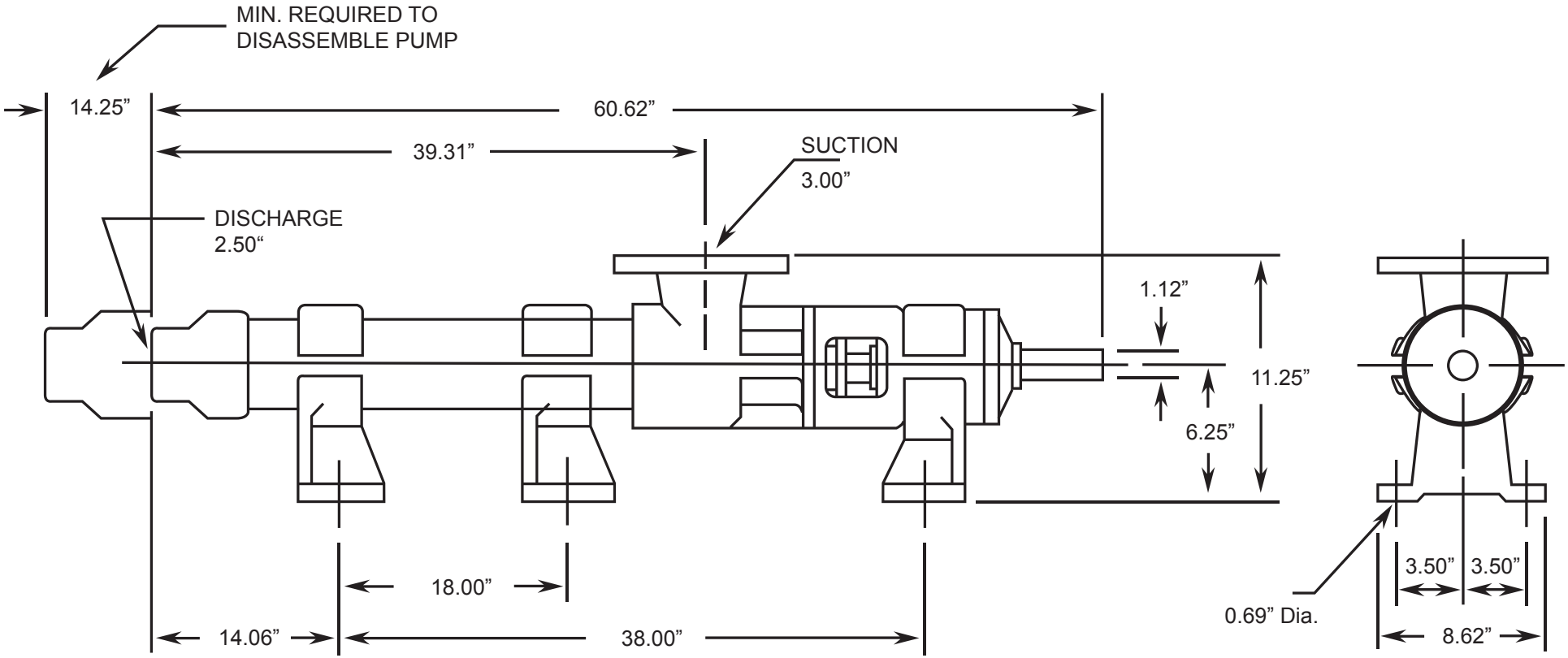

Net weight
≈ lbs.
192

ALL DIMN: Inches

BACK TO TOP

3 Stage Pump

P: 847.640.7867 F: 847.640.7855

2525 Clearbrook Drive Arlington Heights, IL 60005

www.libertyprocess.com