LIBERTY SERIES - LL8

Progressive Cavity Pump

CALL TOLL FREE 877-742-2878
FOR SALES AND SUPPORT
Return to BurtProcess.com

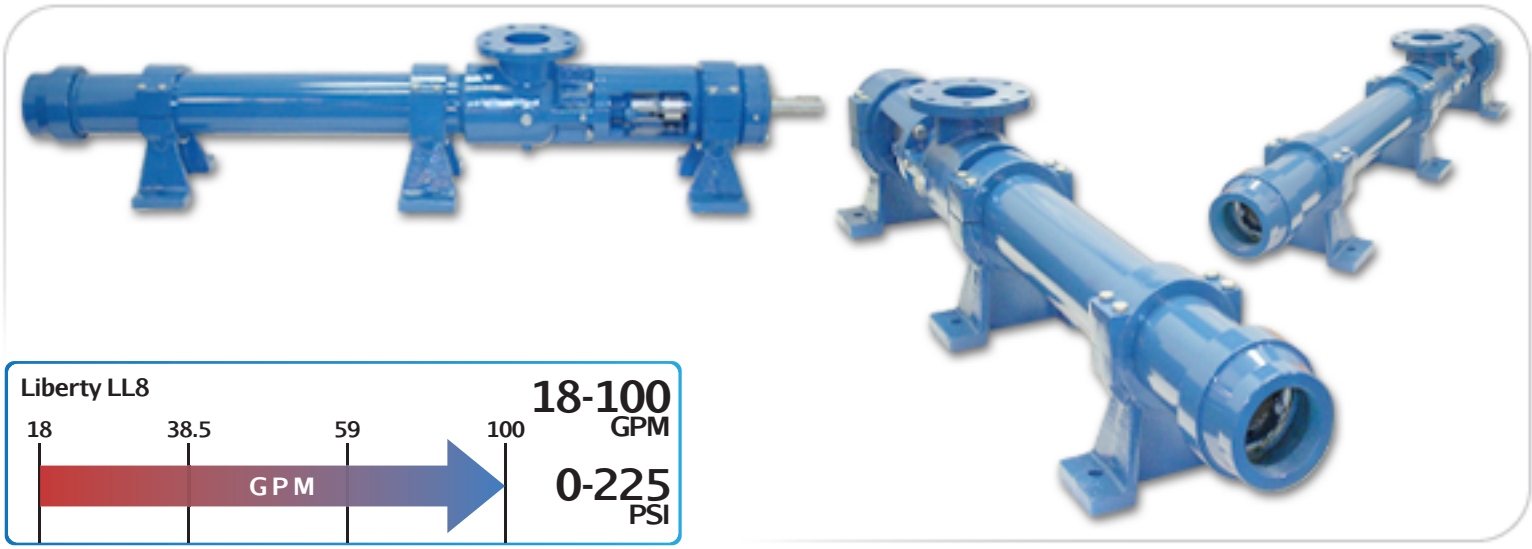

Features

- Modular Design
- Maintenance Free
- Easy Assembly/Disassembly
- Simple Pin Joint Design
- Non-Pulsating Low Shear
- NPT Discharge Connections

Materials

Rotor: *Tool Steel & Stainless Steel, Chrome-Plated*
Stator: *Buna, Rubber, Viton™, EPDM*
Motor: *3, 5, 7.5, and 10 hp*
Inlet: *4"*
Outlet: *4"*
Bases: *Carbon and Stainless Steel*

Curves

Click Links Below

1-Stage	2-Stage	3-Stage
1LL8	**2LL8**	**3LL8**

Drawings

Click Links Below

1-Stage	2-Stage	3-Stage
1LL8	**2LL8**	**3LL8**

Pump Description

The Liberty LL8 Progressive Cavity Pump is an ideal unit for abrasive pumping applications like drilling mud, rendering plants and grease truck applications. Flow rate (11.7 gallons/100 revolutions) 15 up to 100 GPM.

The Liberty LL8 Series PC Pump is a standard flanged pump design manufactured with cast iron or 316 stainless steel pump casings and designed in 1, 2, and 3 stages for 75,150 and 225 psi discharge pressures.

The pump unit is a modular design with simple hardened pinned joint drive assembly. The LL8 Rotors are typically hardened tool steel or 316 stainless steel with a hard chrome plating for long life in abrasive pumping applications.

All other wetted parts are either carbon steel or 316 stainless steel. Stators are available in many elastomer materials such as buna, natural rubber, epdm and viton. The standard seal design is a set of gland packing with a lantern ring and flush connections. Mechanical seal options for this progressive cavity pump are readily available.

The Liberty unit is a low-cost, maintenance free, dependable drop-in replacement progressive cavity pump. The Liberty LL8 Progressive Cavity Pump parts are direct aftermarket progressive cavity pump part replacements that work with the Moyno™ L8 series, the Tarby™ TL8 series and Continental™ CL8 Series.

Contact a Liberty Process representative today for more information about the LL8 Series.

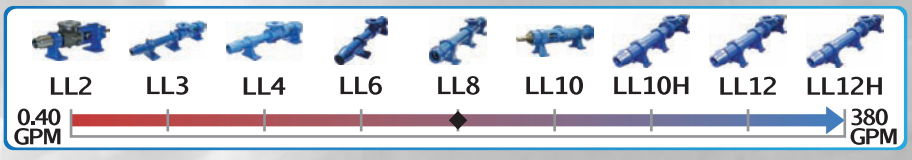

P: 847.640.7867 F: 847.640.7855
2525 Clearbrook Drive Arlington Heights, IL 60005

LIBERTY SERIES - ILL8

Progressive Cavity Pump

Performance Curves

RPM	100	300	500	700	900
NPSH REQ'D	.8	2.2	3.7	6.9	10.5
MIN. HP	1/2	1-1/2	2	3	5

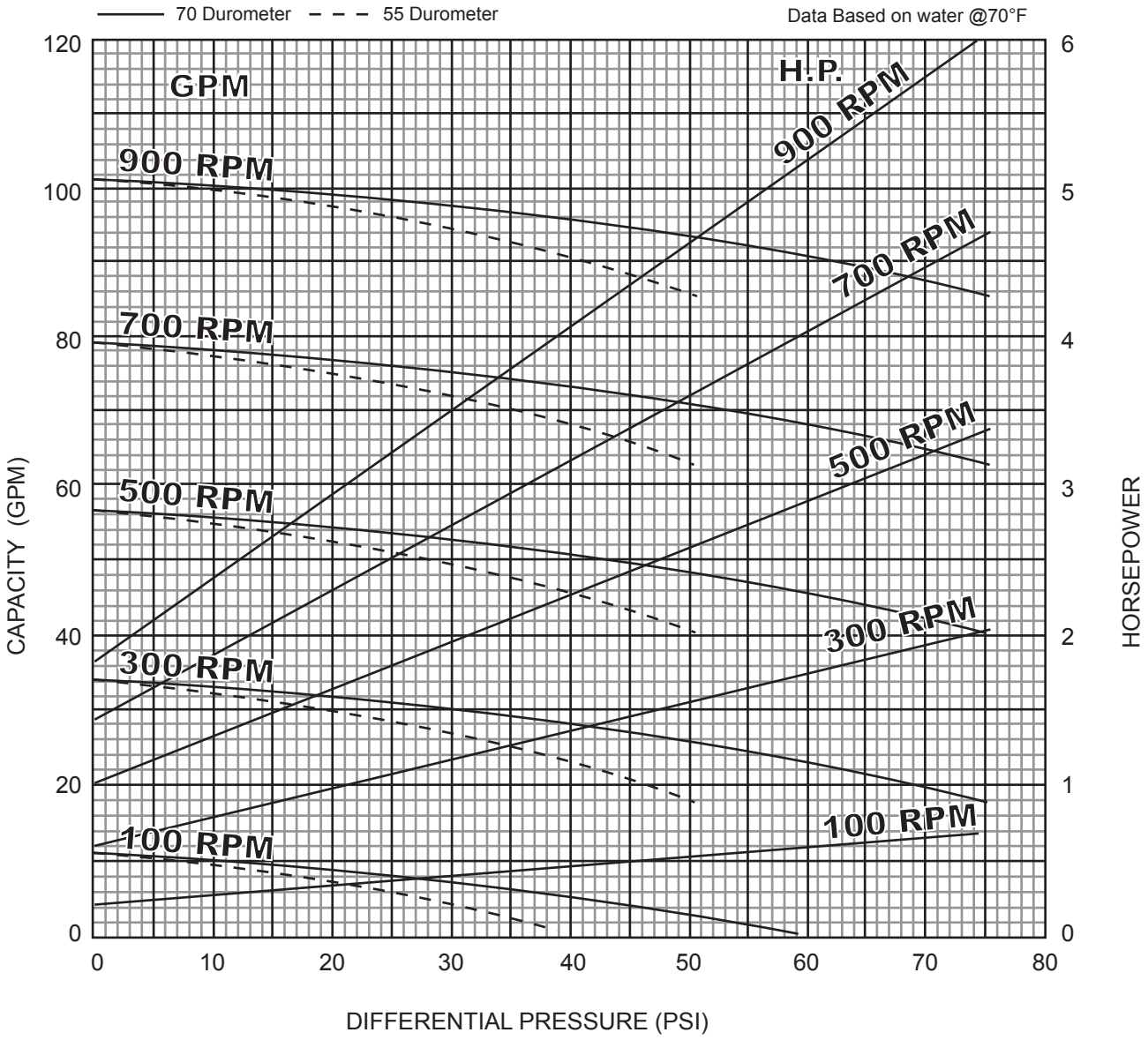

1 Stage Pump

BACK TO TOP

P: 847.640.7867 F: 847.640.7855
2525 Clearbrook Drive Arlington Heights, IL 60005
www.libertyprocess.com

LIBERTY SERIES - 2LL8

Progressive Cavity Pump

Performance Curves

RPM	100	300	500	700	900
NPSH REQ'D	.8	2.2	3.7	6.9	10.5
MIN. HP	1-1/2	3	5	7-1/2	7-1/2

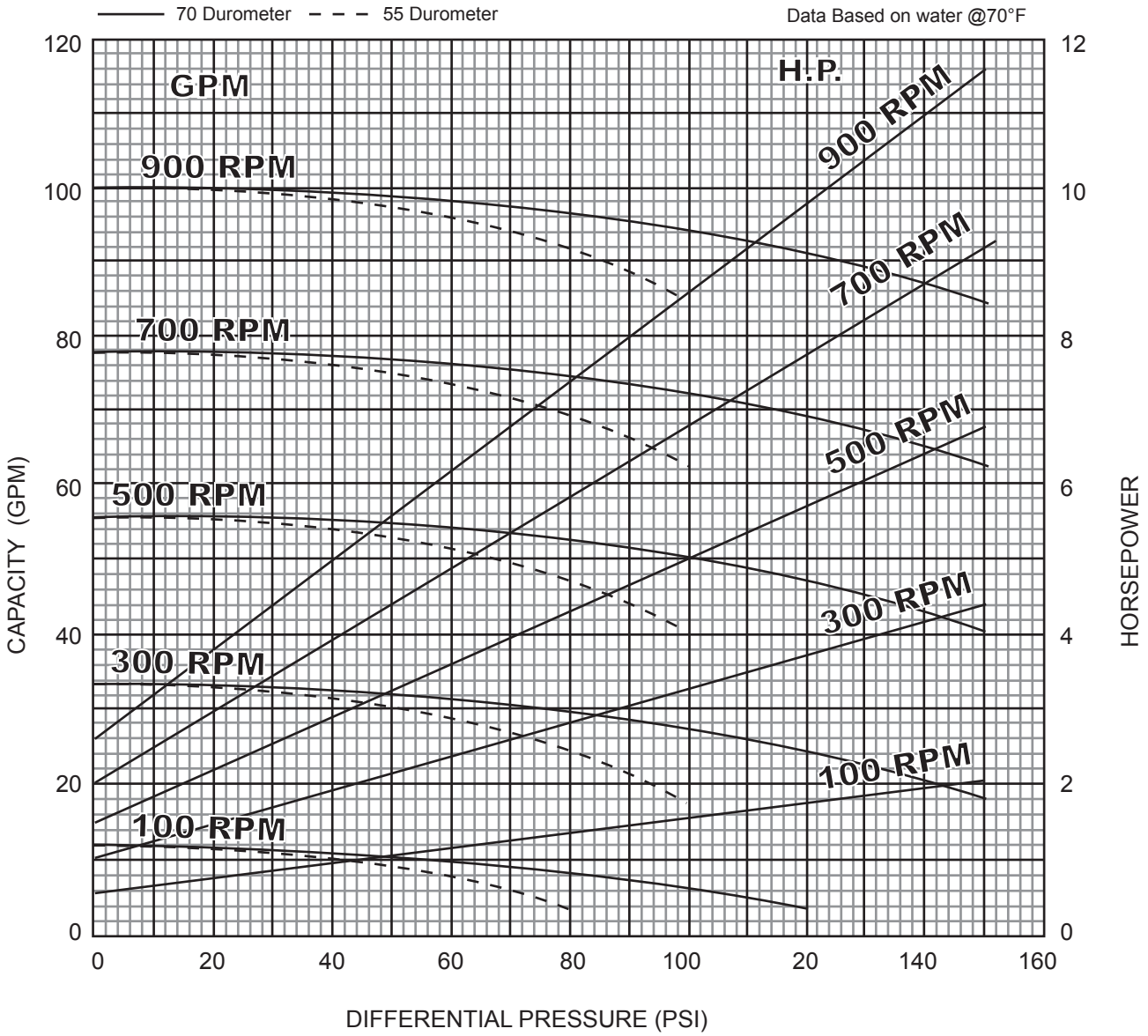

2 Stage Pump

BACK TO TOP

P: 847.640.7867 F: 847.640.7855
2525 Clearbrook Drive Arlington Heights, IL 60005
www.libertyprocess.com

LIBERTY SERIES - 3LL8

Progressive Cavity Pump

Performance Curves

RPM	100	300	500	700	900
NPSH REQ'D	.8	2.2	3.7	6.9	10.5
MIN. HP	2	5	7-1/2	10	10

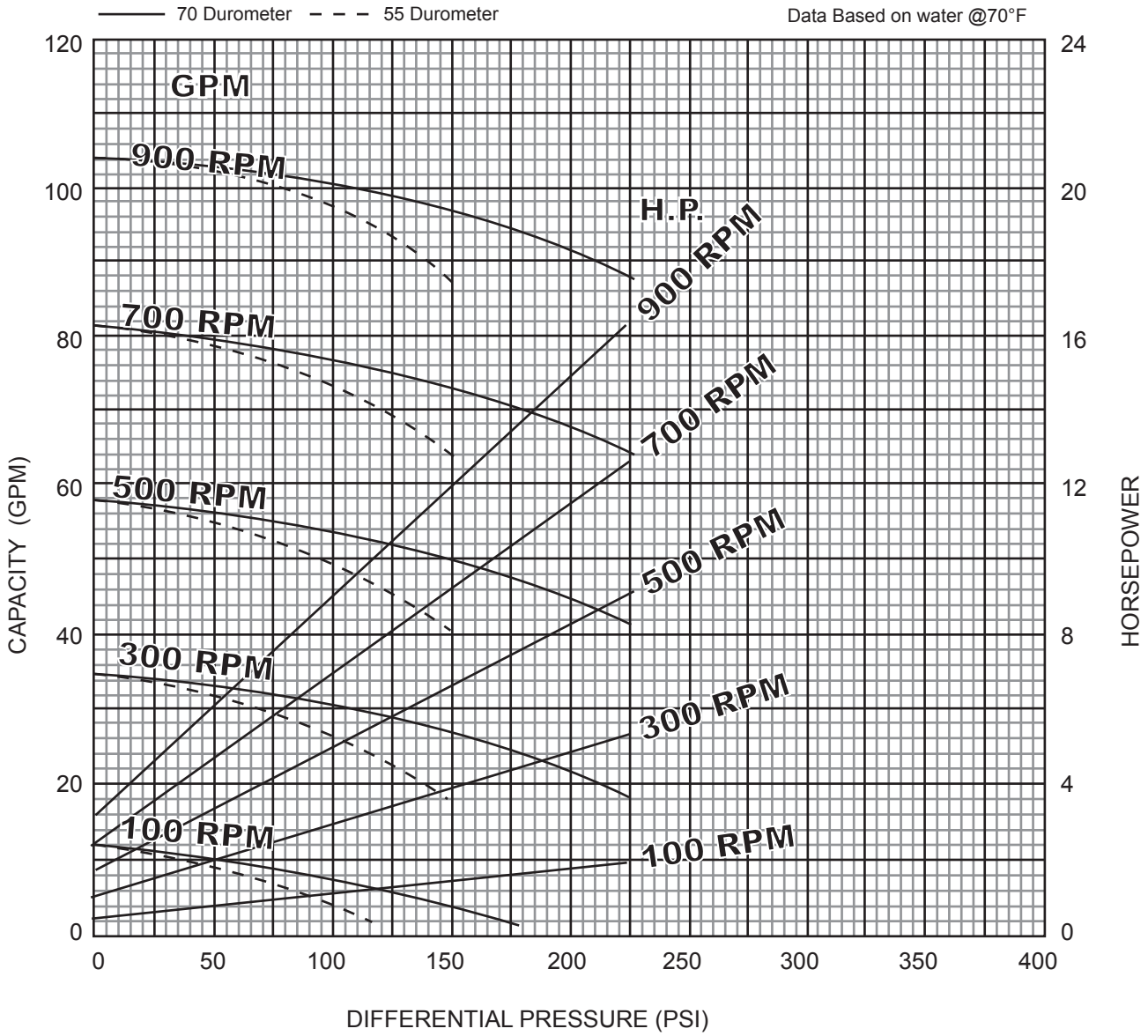

3 Stage Pump

BACK TO TOP

P: 847.640.7867 F: 847.640.7855
2525 Clearbrook Drive Arlington Heights, IL 60005
www.libertyprocess.com

LIBERTY SERIES - ILL8

Progressive Cavity Pump

Dimensional Drawings

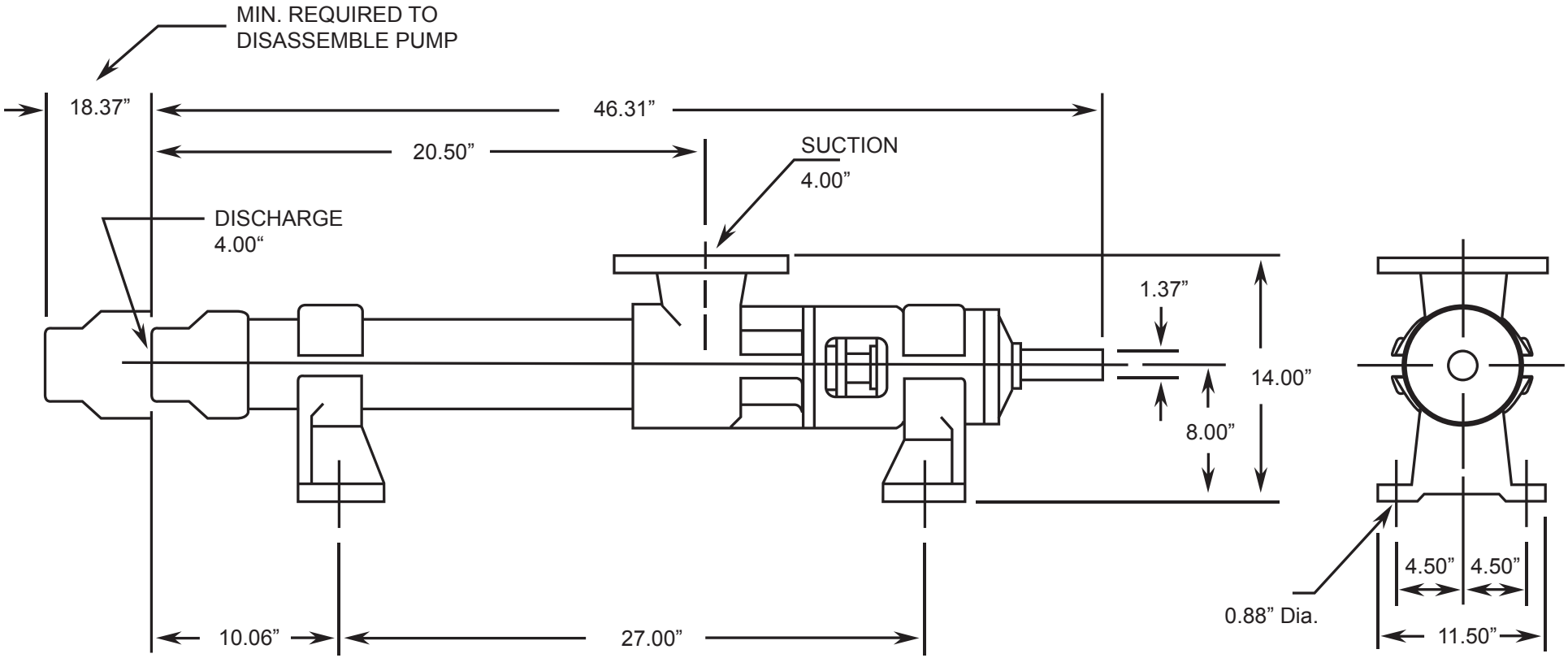

Net weight
≈ lbs.
303

ALL DIMN: Inches

BACK TO TOP

1 Stage Pump

P: 847.640.7867 F: 847.640.7855
2525 Clearbrook Drive Arlington Heights, IL 60005
www.libertyprocess.com

LIBERTY SERIES - 2LL8

Progressive Cavity Pump

Dimensional Drawings

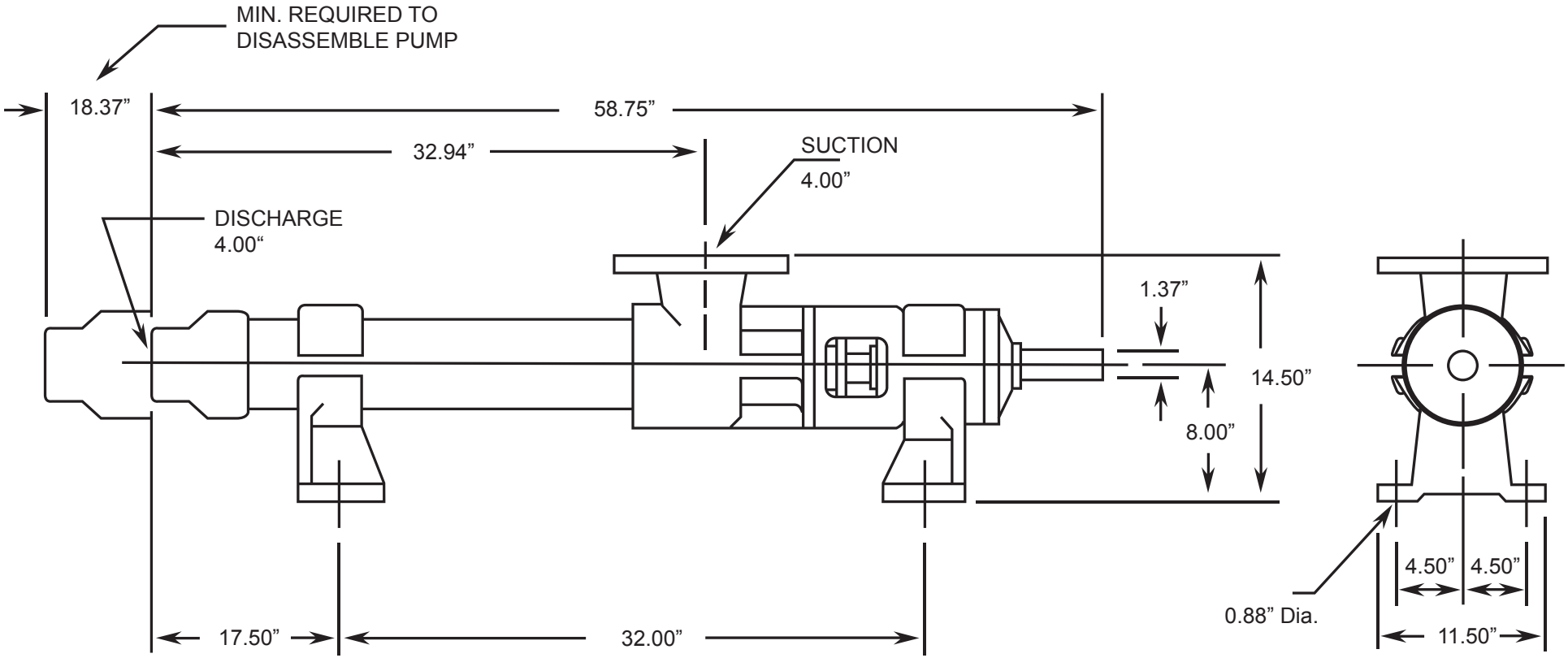

Net weight
≈ lbs.
322

ALL DIMN: Inches

BACK TO TOP

2 Stage Pump

P: 847.640.7867 F: 847.640.7855
2525 Clearbrook Drive Arlington Heights, IL 60005
www.libertyprocess.com

LIBERTY SERIES - 3LL8

Progressive Cavity Pump

Dimensional Drawings

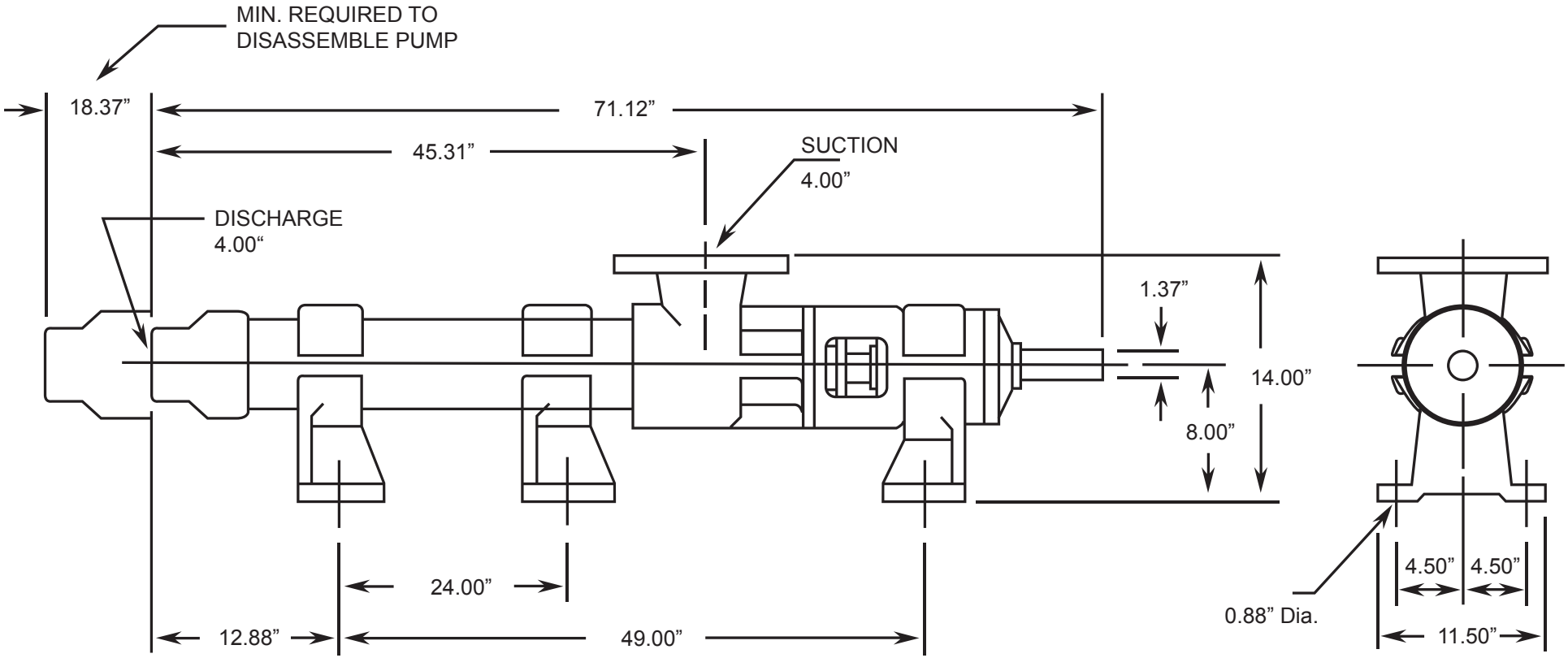

Net weight
≈ lbs.
372

ALL DIMN: Inches

BACK TO TOP

3 Stage Pump

P: 847.640.7867 F: 847.640.7855
2525 Clearbrook Drive Arlington Heights, IL 60005
www.libertyprocess.com