For more information, please call 877-742-2878 or
visit www.burtprocess.com

Instruction **Supplement**

Series B1
Electronic Metering Pump

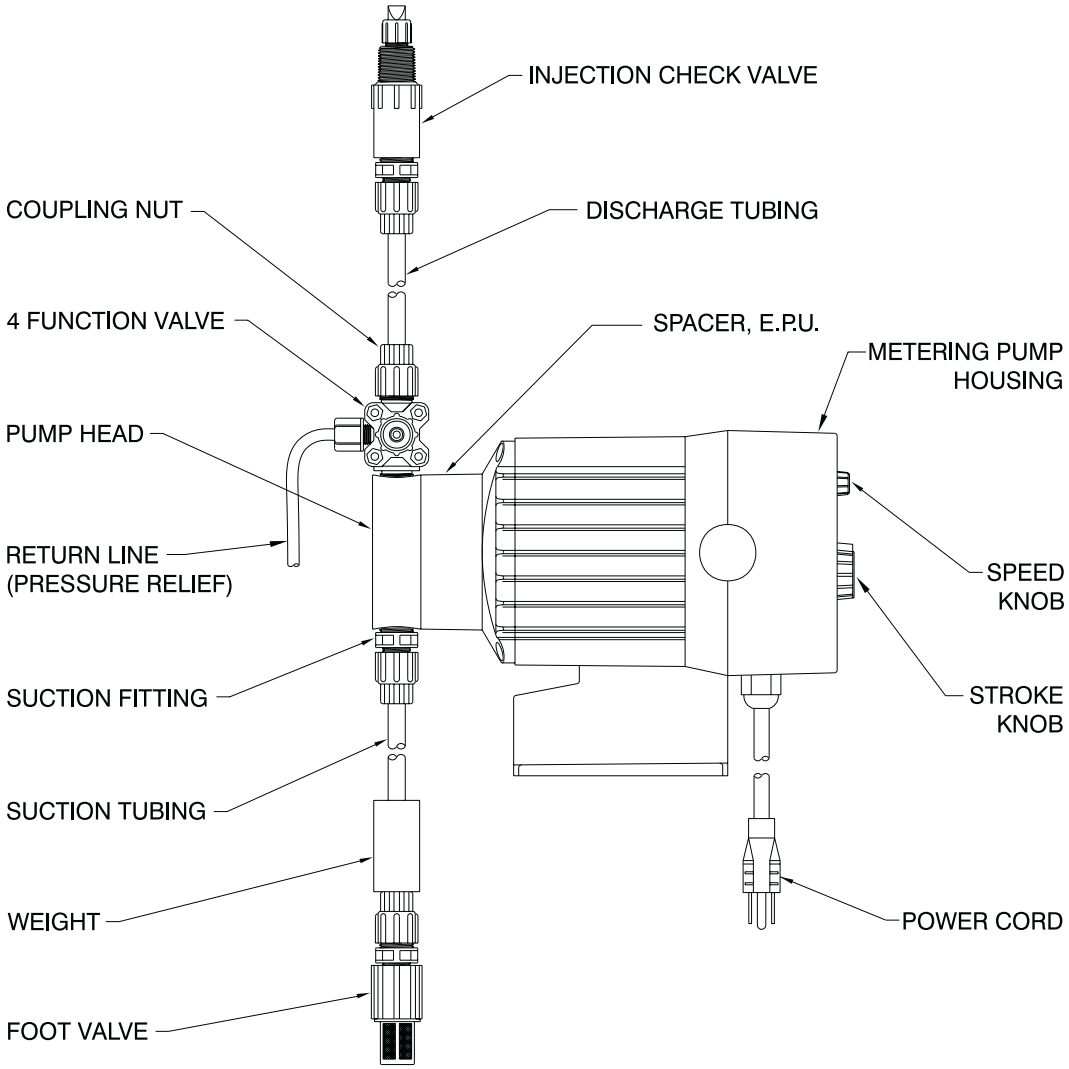

Metering Pump Component Diagram

LMI
MILTON ROY

8 Post Office Square
Acton, MA 01720 USA
TEL: (978) 263-9800
FAX: (978) 264-9172
http://www.lmipumps.com

ISO9001

Replaces same of Rev. A 1/97
1828.B 2/98

SERIES B1 DRIVE ASSEMBLY EXPLODED VIEW DIAGRAM

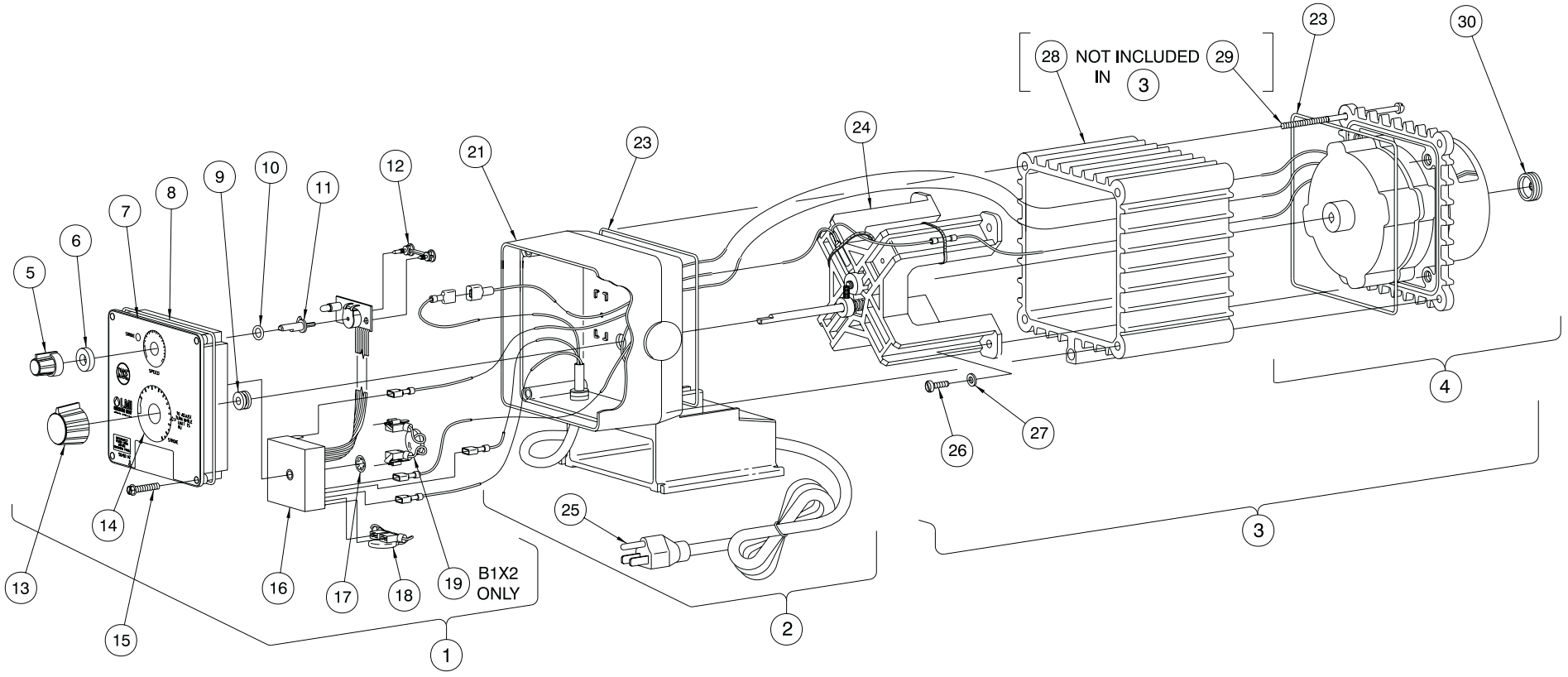

SERIES B1 DRIVE ASSEMBLY PARTS LIST

Key No.	Model	Part No.	Description	Qty
1	B111	36234	Control Panel Assembly, 115V	1
	B112	36235	Control Panel Assembly, 230V US	1
	B113, B115, B116, B117	36236	Control Panel Assembly, 230-250V	1
	B121, B131, B141	36229	Control Panel Assembly, 115V	1
	B122, B132, B142	36230	Control Panel Assembly, 230V US	1
	B123, B133, B143 B125, B135, B145 B126, B136, B146 B127, B137, B147	36231	Control Panel Assembly, 230-250V	1
2	B111, B121, B131, B141	26087	Housing Assembly, 115V	1
	B112, B122, B132, B142	26088	Housing Assembly, 230V US	1
	B113, B123, B133, B143	26089	Housing Assembly, 230V DIN	1
	B115, B125, B135, B145	26819	Housing Assembly, 240V UK	1
	B116, B126, B136, B146	26820	Housing Assembly, 250V AUST	1
	B117, B127, B137, B147	28256	Housing Assembly, 230V SWISS	1
3	B111, B121	31927	EPU & Spacer w/Stroke Adj., 115V, 0.9SI	1
	B112, B122, B113, B123 B115, B125, B116, B126 B117, B127	31928	EPU &Spacer w/Stroke Adj., 230V, 0.9SI	1
	B131	31929	EPU & Spacer w/Stroke Adj., 115V, 1.8SI	1
	B132, B133, B135, B136, B137	31930	EPU & Spacer w/Stroke Adj., 230V, 1.8SI	1
	B141	31931	EPU & Spacer w/Stroke Adj., 115V, 3.0SI	1
	B142, B143, B145, B146, B147	31932	EPU & Spacer w/Stroke Adj., 230V, 3.0SI	1
4	B111, B121	26893	EPU & Spacer Assembly, 115V, 0.9SI	1
	B112, B122, B113, B123 B115, B125, B116, B126 B117, B127	26894	EPU & Spacer Assembly, 230V, 0.9SI	1
	B131	26897	EPU & Spacer Assembly, 115V, 1.8SI	1
	B132, B133, B135, B136, B137	26898	EPU & Spacer Assembly, 230V, 1.9SI	1
	B141	29618	EPU & Spacer Assembly, 115V, 3.0SI	1
	B142, B143, B145, B146, B147	29619	EPU & Spacer Assembly, 230V, 3.0SI	1
5	B1	30709	Speed Knob	1
6	B1	30803	Gasket	1

Key No.	Model	Part No.	Description	Qty
7	B1	36256	Panel with Nameplate	1
8	B1	10166	O-Ring	1
9	B1	10465	Grommet	1
10	B1	34497	O-Ring	1
11	B1	35743	Speed Shaft	1
12	B1	35744	Dual Pin	1
13	B1	31891	Stroke Knob Assembly	1
14	B11	25882	Stroke Dial	1
15	B1	30306	Screw	4
16	B1	36255	Pulser	1
17	B1	10422	Retaining Ring	1
18	B111, B121, B131, B141	10626	Varistor Assembly, 115V	1
	B112, B122, B132, B142 B113, B123, B133, B143 B115, B125, B135, B145 B116, B126, B136, B146 B117, B127, B137, B147	10627	Varistor Assembly, 230-250V	1
19	B112, B122, B132, B142	25268	Varistor Assembly, 230V US	1
21	B1	35398	Housing	1
23	B1	35269	O-Ring	2
24	B1	31898	Stroke Adjustment Assembly	1
25	B111, B121, B131, B141	26293	Power Cord Assembly, 115V	1
	B112, B122, B132, B142	26296	Power Cord Assembly, 230V US	1
	B113, B123, B133, B143	26297	Power Cord Assembly, 230V DIN	1
	B115, B125, B135, B145	26817	Power Cord Assembly, 240V UK	1
	B116, B126, B136, B146	26818	Power Cord Assembly, 250V AUST	1
	B117, B127, B137, B147	27701	Power Cord Assembly, 230V SWISS	1
26	B1	10598	Screw, 10-24 X .62 SS	4
27	B1	10415	Washer, Conical	4
28	B1	25068	EPU Sleeve	1
29	B1	25127	Screw, 10-24 X 4.5 SS	4
30	B1	10973	Seal	1

SERIES B1 CONTROL PANEL DETAIL

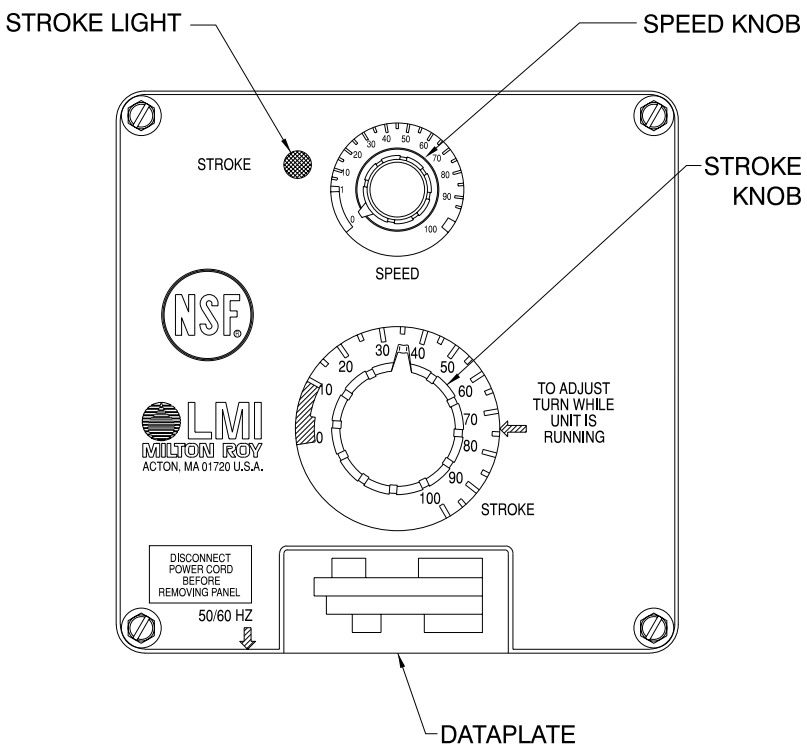

SERIES B1 WIRING DIAGRAM

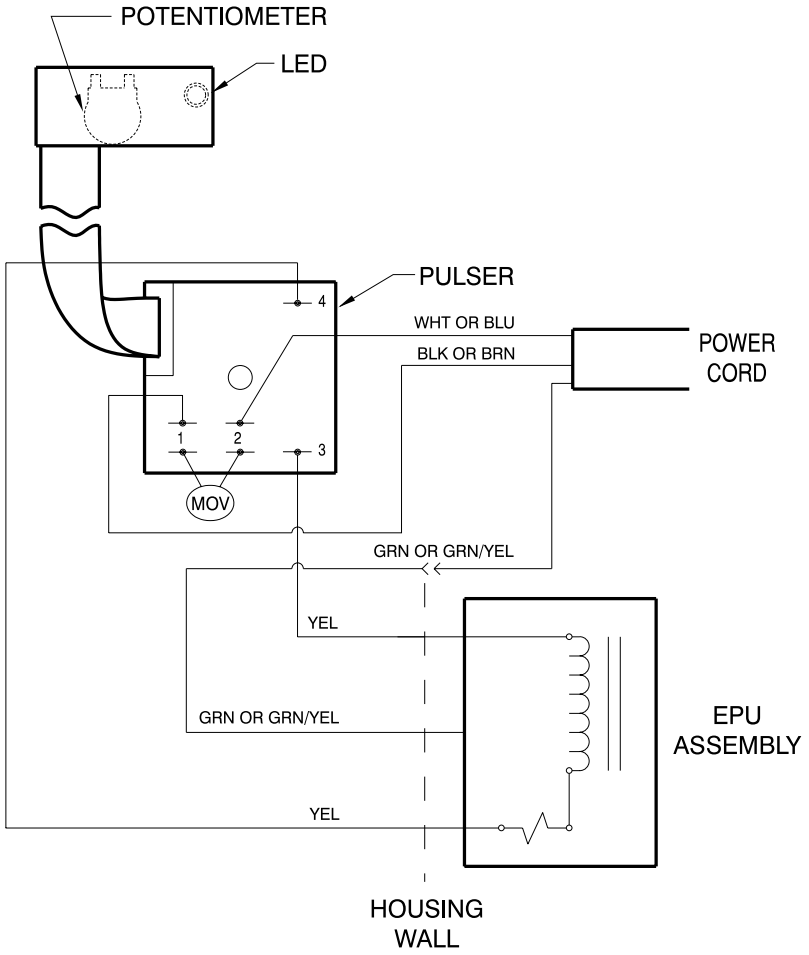

© 1998 LMI Milton Roy - All Rights Reserved
Printed in USA
Specifications subject to change without notice.