For more information, please call 877-742-2878 or
visit www.burtprocess.com

Data Sheet

Series E
Electronic Metering Pumps

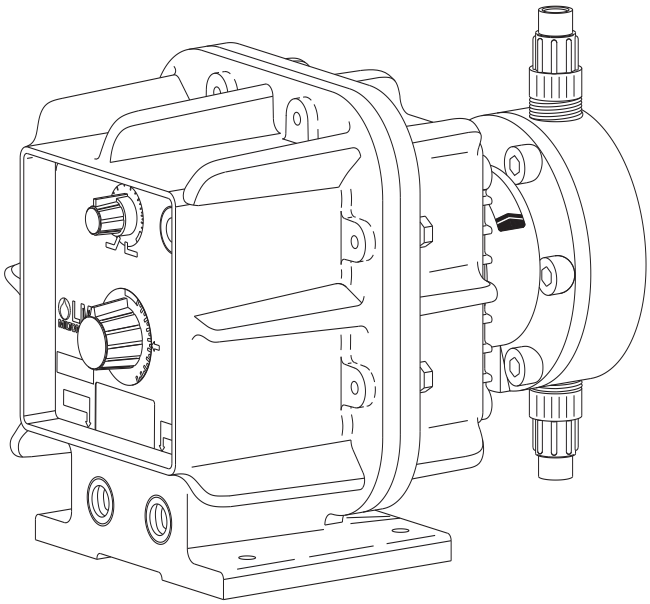

Configuration Data

Model E74 1 - 30

Control & Output Code
Instrument Responsive/Manual Control
Explosion proof electromagnetic metering pumps. UL and CUL Listed, meets or exceeds all standards for Division 1 and 2, Class I, Groups C and D; Class II, Groups E, F, and G. Manual adjustment or switch conversion to external control for automatic systems.
E70* --- 1.3 GPH (4.9 l/h) .... 300 psi (20.7 Bar)
E71* --- 2.5 GPH (9.5 l/h) .... 150 psi (10.3 Bar)
E72* --- 4.0 GPH (15.1 l/h) .... 100 psi (6.9 Bar)
E73* --- 8.0 GPH (30 l/h) ..... 60 psi (4.1 Bar)
E74* ---20.0 GPH (76 l/h) ..... 25 psi (1.7 Bar)

Voltage Code	
1	---------- 120 VAC Hardwired
2	---------- 240 VAC Hardwired

Liquid End
See next page for complete liquid end specifications & selection.

Dimensions

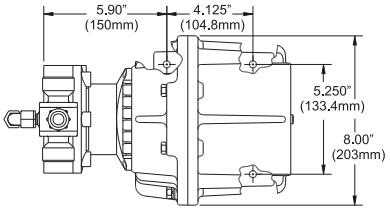

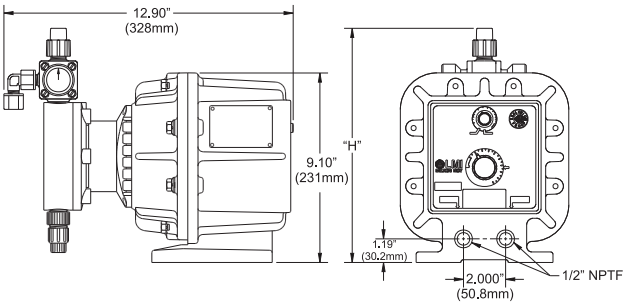

* Dimensions shown are maximums for largest available Liquid End. Dimensions will vary depending on Liquid End selected.

Specifications

Series	Strokes per Minute (Adjustable) Min	Max	Stroke Length (Adjustable) Recommended Minimum	Average Input Power @ Max Speed	Shipping Weight
E70* E71* E72* E73* E74*	5	100	10%	44 watts	(41 lbs) 18.6 kg

LMI MILTON ROY

201 Ivyland Road
Ivyland, PA 18974 USA
TEL: (215) 293-0401
FAX: (215) 293-0445
http://www.lmipumps.com

Replaces same of Rev. D 8/01
1586.E 6/09

Standard Liquid End Configuration Data & Materials of Construction

Drive Assembly	Liquid End No.	Size Code	Materials of Construction				Accessory	Tubing & Connections
			Head & Fittings	Balls	Liquifram™	Check Valve		Discharge Suction
E70 ☐ -	498SP	0.9	PVC	Ceramic	Fluorofilm™	PVDF / Polyprel®	4FV	Pipe 1/2" NPT M
	297	0.9	316 S.S.	316 S.S.	Fluorofilm™	316 S.S.		Pipe 1/4" NPT M
E71 ☐ -	368SI	1.8	PVC	Ceramic	Fluorofilm™	PVDF / Polyprel®	4FV	PE .375" O.D.
	362SI	1.8	PVDF / PVDF	Ceramic	Fluorofilm™	PVDF / Polyprel®	4FV	PE .375" O.D.
E72 ☐ -	363SI	1.8	PVDF / PVDF	Ceramic	Fluorofilm™	PVDF / PTFE	4FV	PE .375" O.D.
	460SI	1.8	Acrylic / PVC	Ceramic	Fluorofilm™	PVDF / Polyprel®	4FV	PE .375" O.D.
	465SI	1.8	Polypropylene	Ceramic	Fluorofilm™	PVDF / PTFE	4FV	PE .5" O.D.
	468SI	1.8	PVC/PVC	Ceramic	Fluorofilm™	PVDF / Polyprel®	4FV	PE .375" O.D.
	469SI	1.8	Acrylic/PVDF	PTFE	Fluorofilm™	PVDF / Polyprel®	4FV	PE .375" O.D.
	277	1.8	316 S.S.	316 S.S.	Fluorofilm™	316 S.S.		Pipe 1/4" NPT M
	75HV	1.8	Polypropylene	316 S.S.	Fluorofilm™	PTFE		PE .5" O.D.Vinyl .938" O.D.
	76HV	1.8	Acrylic / PP	316 S.S.	Fluorofilm™	Hypalon®		PE .5" O.D.Vinyl .938" O.D.
E73 ☐ -	312SI#	3.0	PVDF / PVDF	Ceramic	Fluorofilm™	PVDF / Polyprel®	4FV	PE .5" O.D.
	313SI#	3.0	PVDF / PVDF	Ceramic	Fluorofilm™	PVDF / PTFE	4FV	PE .5" O.D.
	318SI#	3.0	PVC / PVC	Ceramic	Fluorofilm™	PVDF / Polyprel®	4FV	PE .5" O.D.
	410SI#	3.0	Acrylic / PVC	Ceramic	Fluorofilm™	PVDF / Polyprel®	4FV	PE .5" O.D.
	418SI#	3.0	PVC / PVC	Ceramic	Fluorofilm™	PVDF / Polyprel®	4FV	PE .5" O.D.
	419SI#	3.0	Acrylic/ PVDF	PTFE	Fluorofilm™	PVDF / Polyprel®	4FV	PE .5" O.D.
	20	3.0	Acrylic / PVC	Ceramic	Fluorofilm™	Hypalon®		PE .5" O.D. Vinyl .5" O.D.
	20HV	3.0	Acrylic / PP	316 S.S.	Fluorofilm™	Hypalon®		PE .5" O.D.Vinyl .938" O.D.
	20S	3.0	Acrylic / PVC	Ceramic	Fluorofilm™	Hypalon®	4FV	PE .5" O.D. Vinyl .5" O.D.
	24	3.0	PVC	Ceramic	Fluorofilm™	PTFE		Pipe 1/2" NPT M
	25HV	3.0	Polypropylene	316 S.S.	Fluorofilm™	PTFE		PE .5" O.D.Vinyl .938" O.D.
	25P	3.0	Polypropylene	Ceramic	Fluorofilm™	PTFE		Pipe 1/2" NPT M
	25T	3.0	Polypropylene	Ceramic	Fluorofilm™	PTFE		PE .5" O.D.
	26	3.0	PVC	Ceramic	Fluorofilm™	Viton®		PE .5" O.D.
	26S	3.0	PVC	Ceramic	Fluorofilm™	Viton®	4FV	PE .5" O.D.
	27	3.0	316 S.S.	316 S.S.	Fluorofilm™	PTFE		Pipe 1/2" NPT M
	29	3.0	UHMW PE	Ceramic	Fluorofilm™	Hypalon®		PE .5" O.D.
E74 ☐ -	30	6.0	Acrylic / PVC	Ceramic	Fluorofilm™	PTFE		PE .5" O.D. Vinyl .5" O.D.
	34	6.0	PVC	Ceramic	Fluorofilm™	PTFE		Pipe 1/2" NPT M
	35P	6.0	Polypropylene	Ceramic	Fluorofilm™	PTFE		Pipe 1/2" NPT M
	35T	6.0	Polypropylene	Ceramic	Fluorofilm™	PTFE		PE .5" O.D.
	36	6.0	PVC	Ceramic	Fluorofilm™	PTFE		PE .5" O.D.
	37	6.0	316 S.S.	316 S.S.	Fluorofilm™	PTFE		Pipe 1/2" NPT M

- These liquid ends use 3/8" diameter valve balls. Pump output may be reduced in some applications.

NOTE: 1. Pumps are rated for: Class I, Division I, Groups C & D; Class II, Division I, Groups E, F, and G

☐ See front page for voltage code specifications.

3FV indicates that the pump is equipped with an LMI Three Function Valve (pressure relief, priming aid, line drain). To specify 3FV, change "S" to "T".

4FV indicates that the pump is equipped with an LMI Four Function Valve. This diaphragm type anti-syphon/pressure relief valve is installed on the pump head. It provides anti-syphon protection and aids in priming, even under pressure.

Output Information

Series	Gallons per Hour Min	Gallons per Hour Max	Liters per Hour Min	Liters per Hour Max	mL/cc per Minute Min	mL/cc per Minute Max	mL/cc per Stroke Min	mL/cc per Stroke Max	Maximum Injection Pressure	
E70*	0.007	1.3	0.025	4.9	0.41	82	0.08	0.82	300 psi	(20.7 Bar)
E71*	0.013	2.5	0.048	9.5	0.79	158	0.16	1.58	150 psi	(10.3 Bar)
E72*	0.020	4.0	0.076	15.1	1.26	252	0.25	2.52	100 psi	(6.9 Bar)
E73*	0.040	8.0	0.151	30.0	2.52	505	0.50	5.05	60 psi	(4.1 Bar)
E74*	0.100	20.0	0.380	76.0	6.33	1267	1.27	12.67	25 psi	(1.7 Bar)

* Minimum output can be reduced to zero (0) when in external mode.

© 2009 Milton Roy Company - All Rights Reserved
Printed in USA - Specifications subject to change without notice.

Fluorofilm™ is a copolymer of PTFE and PFA.
Polyprel® is an elastomeric PTFE copolymer.

Polyprel is a registered trademark of Milton Roy Company. Fluorofilm and Liquifram are trademarks of Milton Roy Company. Hypalon, Viton are registered trademarks of E.I. du Pont de Nemours & Co., Inc.