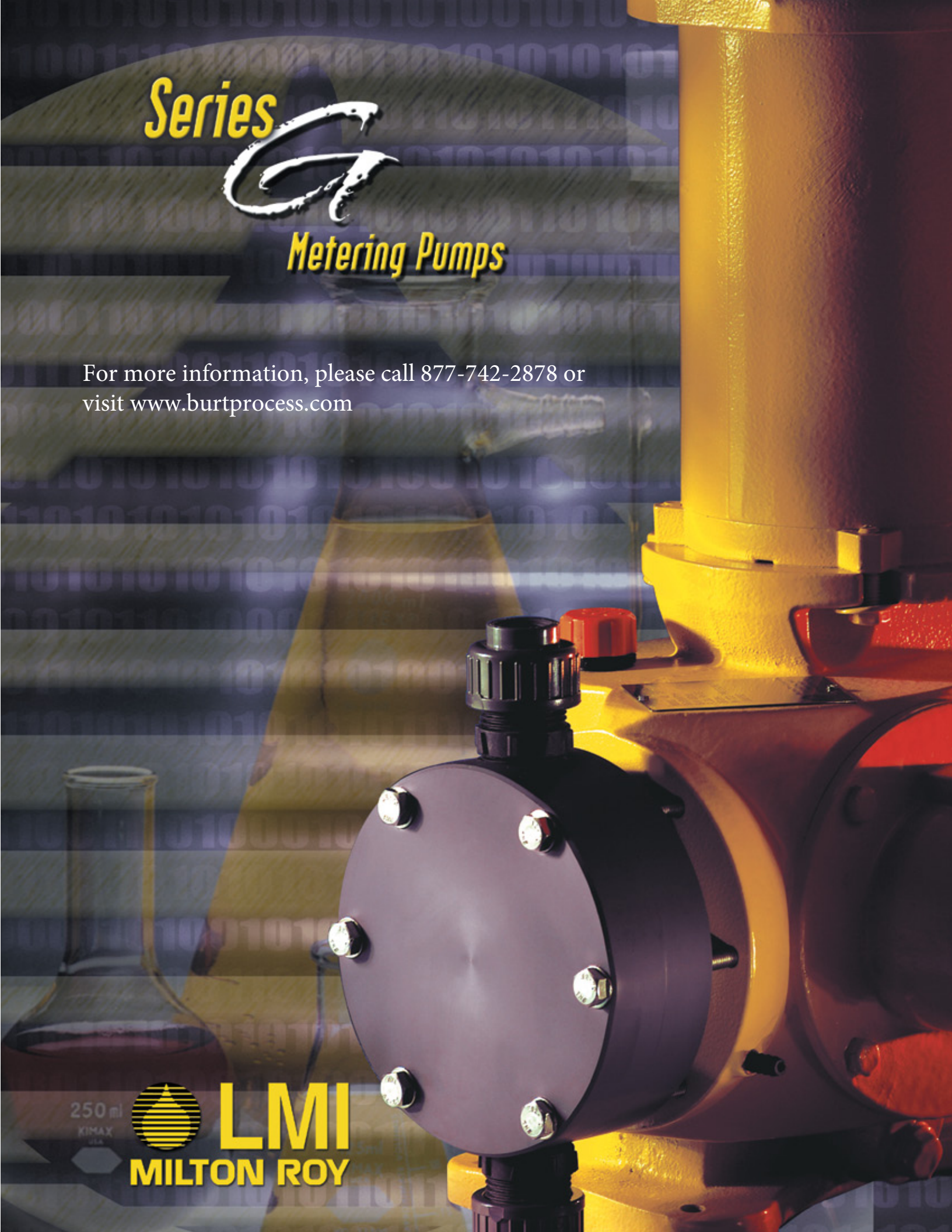
Series G
Metering Pumps
For more information, please call 877-742-2878 or
visit www.burtprocess.com
LMI
MILTON ROY

Series G

The SD & SG metering pumps offer a high level of reliability with outstanding value for applications up to 175 psi (12 Bar).

LMI has combined heavy-duty industrial drive technology with state-of-the-art design and manufacturing processes in creating the Series G metering pump.

This family of Mechanically Actuated Diaphragm metering pumps is designed for durability and cost effectiveness.

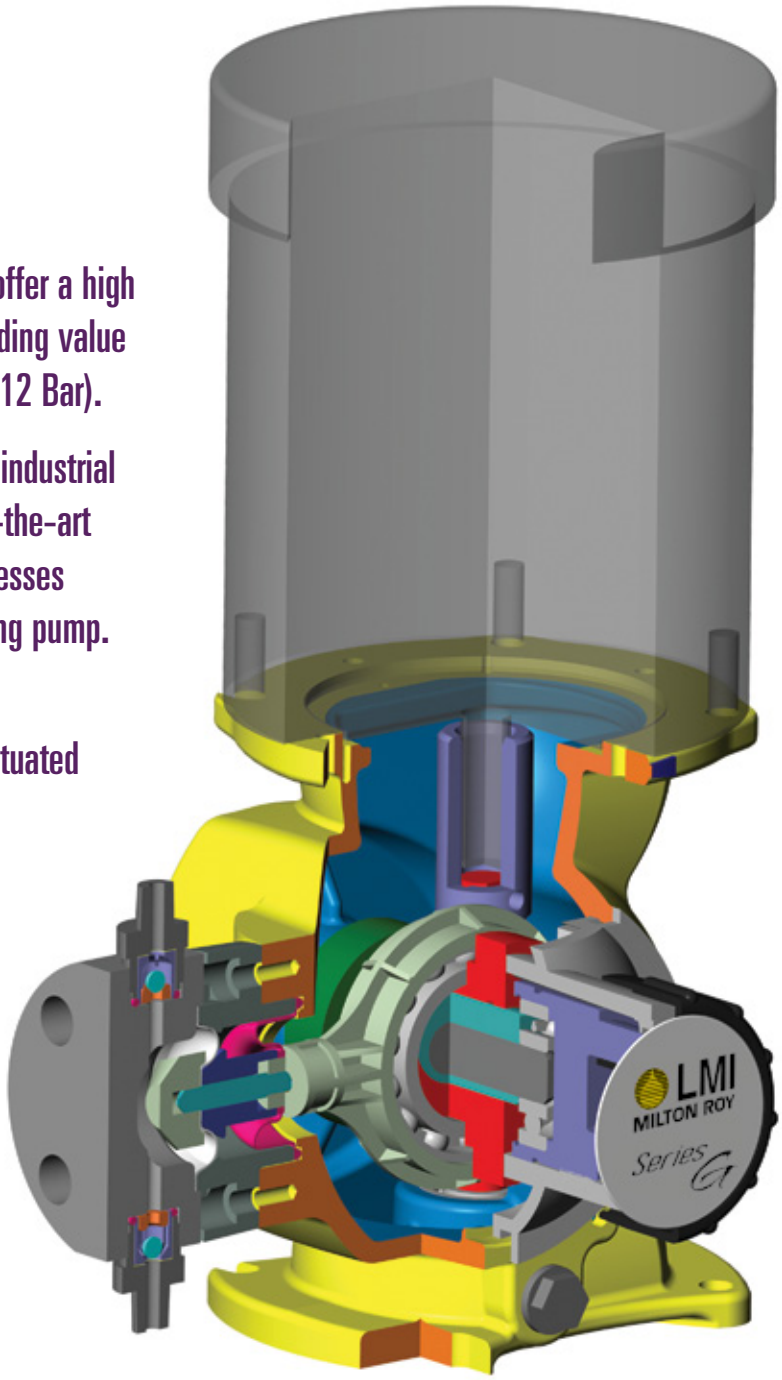

Illustrated to the right is a SD4 with a PVC liquid end, featuring NPT connections.

Series G Features and Specifications

- Flow Rates up to 312 GPH (1180 Liters/hr)
- Mechanically Actuated Diaphragm liquid end eliminates flow restrictions
- Durable, metallic housing designed to withstand tough environments
- High efficiency motors minimize heat buildup
- A robust metallic, worm gear drive coupled with the industrial duty variable eccentric stroke adjustment mechanism yields a 10 to 1 turn down ratio with smooth velocity profiles as compared to the pulsating flows of solenoid pumps or lost motion designs.
- The PTFE, high performance, diaphragm design increases diaphragm life by eliminating the stresses inherent in most designs
- Reliable low flow performance is a result of high performance check valves with machined seats
- All gear components operate in an oil bath for long life
- Precision stroke adjustment can be operated while the pump is running or stopped
- Steady State Accuracy - ± 1% of full capacity over the 10 to 1 turndown ratio
- Liquid Temperature Range - 14° to 122° F (-14° to 50° C)
- Coating - 2 part epoxy
- Average Weight - Frame D: 45 lbs (20 kgs)
  Frame G: 105 lbs (48 kgs)
- Relevant model codes are ETL Certified to conform to ANSI/NSF Std 50

Pump Selection by Capacity and Pressure

Pump Selection Series G			Maximum Ratings						
			Capacity@60Hz (1725 RPM)		Capacity@50Hz (1425 RPM)		Pressure		
Frame	Liquid End	Gear Code	GPH	Liter/Hr	GPH	Liter/Hr	PSI	Bar	
D	2	1	0.18	0.7	0.15	0.6	175	12	Ratings based on 1/4 HP (.25 kW)
		2	0.35	1.3	0.29	1.1			
		6	0.48	1.8	0.40	1.5			
		3	0.7	2.6	0.58	2.2			
	4	1	3.0	11	2.5	9.5	150	10	
		2	6.6	25	5.5	21			
		6	10	38	6.9	26			
		3	14.4	45	12	45			
	7	1	13	49	10	39	100	7	
		2	25	95	21	79			
		6	34	129	28	106			
		3	50	189	42	159			
	8	1	31	117	26	98	75	5	
		2	57	216	47	178			
		6	87	329	72	273			
		3	127	481	106	401			
G	5	1	26	98	22	82	150	10	Ratings based on 1 HP (.75 kW)
		2	53	201	44	167			
		6	75	284	62	237			
		3	106	401	88	334			
		8	—	—	110	416			
	6	1	37	140	31	117	100	7	
		2	74	280	62	233			
		6	104	394	87	328			
		3	147	555	122	464			
		8	—	—	154	583			
	7	1	75	284	62	237	50	3.5	
		2	150	568	125	473			
		6	208	787	173	656			
		3	300	1136	250	946			
		8	—	—	312	1181			



Optional degassing valve for SD 7, SD 8 & SG 5 is p/n 61411

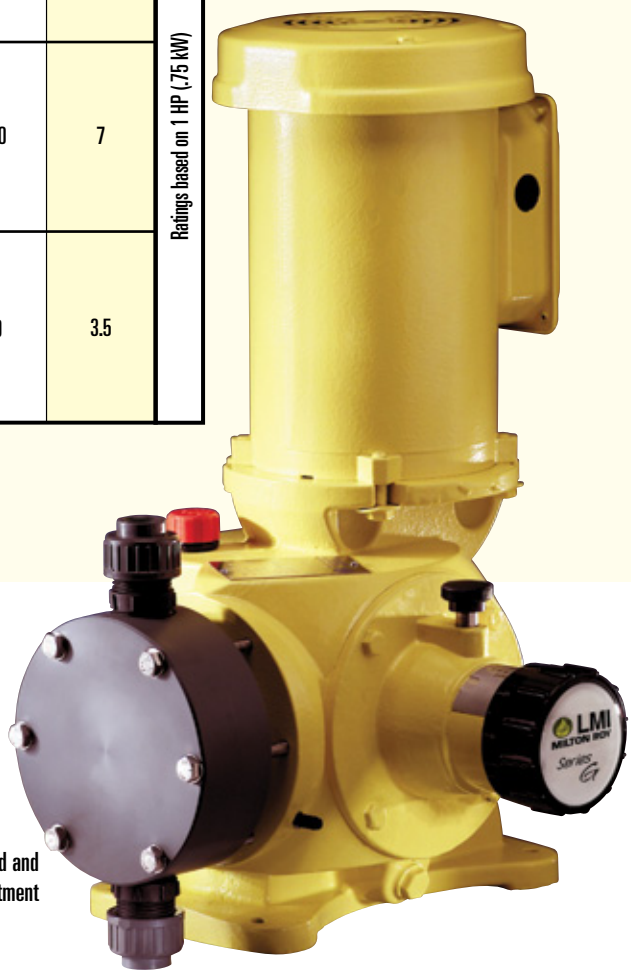

The LMI SG7 with PVC liquid end and manual micrometer stroke adjustment

Series G Product Code

S [ ][ ] [ ] [ ] [ ] [ ]

Frame | Gear Ratio | Motor &/ or Mount | Liquid End Material | Connections

Frame

D Frame

- D2
- D4
- D7
- D8

G Frame

- G5
- G6
- G7

Gear Ratio Code

- 1 = 43 SPM
- 2 = 86 SPM
- 6 = 120 SPM
- 3 = 173 SPM
- 8 = 180 SPM @ 1425 RPM (SG only)

Motor &/or Mount

- 8 = 1 ph 60 Hz 115/230 VAC 1725 RPM TE
- J = 3 ph 60 Hz 230/460 VAC 1725 RPM TE
- 9 = 1 ph 50 Hz 115/230 VAC 1425 RPM TE
- L = 3 ph 50 Hz 220/380 VAC 1425 RPM TE
- X = Nema 56C Mount Less Motor
- P = DC Motor with Variable Speed Drive

Liquid End Material

- 4 = Polypropylene
- 2 = PVDF
- 7 = 316 SS
- 8 = PVC
- P = Polymer Service
- L = Slurry Applications
- N = H_2SO_4 Applications
- C = Caustic Applications (Sodium Hydrochloride) G-Frame Only
- F = Fluoride Applications G-Frame Only

Connections

- P = NPT

Optional Degassing Valve Information. Use only with PVC Liquid end.

Series G	Frame	No Fitting
SD	2	39672
	4	39672

Supplied with 10' of 1/4" Polyethene Tubing

Series G	Frame	Valve w/Adapter
SD*	7	61411
	8	61411
SG*	5	61411
	6	61421
	7	61421

* Connection 1/4 NPT F



The photograph to the right is a SD4 with a PVC liquid end, featuring a Degassing Valve - p/n 39672

Dimensions

Approximate for envelope estimations. Certified prints are available.
Dimensions are showing for both D and G Frames in inches.

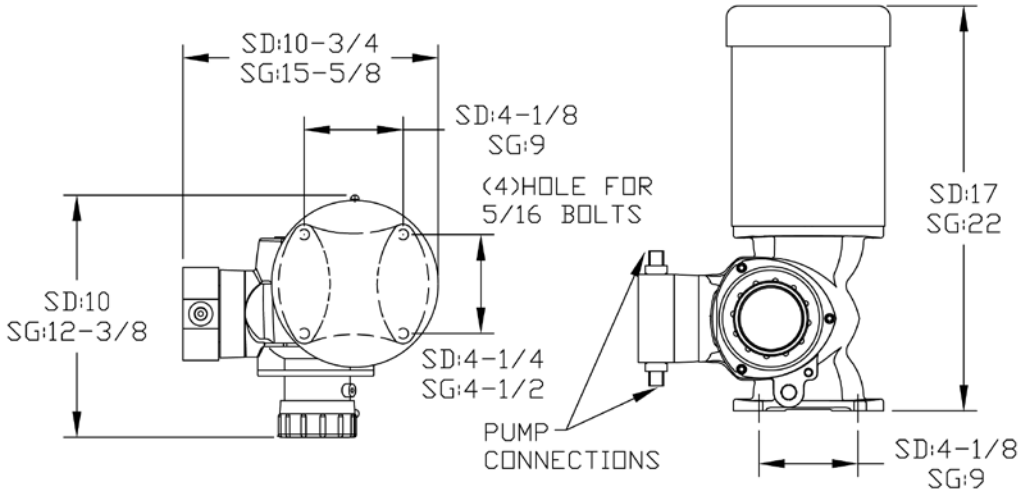

NPT Connection Sizes

Frame	Liquid End Size	Connection Port Size for the following materials				
		PP, PVC & PVDF	Applications			316 SS
			Polymer	Slurry	H_2SO_4	
D	2	¼" Male		N/A	¼" Male	¼" Male
	4			½" Male		½" Male
	7 & 8	½" Female				
G	5					
	6 & 7	1" Female		1" Male	1" Female	1" Male

Materials of Construction

Material	Frame	Liquid End Size	Head	Diaphragm Cap	Check Valve Body	Seals	Seats	Balls	Diaphragm
Polypropylene (PP)	G	5	PP	PP	PVDF	Viton	PVC	Ceramic	PTFE
		6			PVC				
PVC***	D	2*	PVC	PVC	PVDF	Aflas	Alloy C22		
		4*					PTFE		
		7 & 8				Viton	PVC		
	G	5							
		6 & 7			PVC				
PVDF	D	2*	PVDF	PVDF	PVDF	Aflas	Alloy C22		
		4*					PTFE		
		7 & 8				PTFE	PVDF		
	G	All							
Polymer Applications**	D & G	All	PVC		PVDF	Viton	316 SS	316 SS	
Slurry Applications	D	4	316 SS	PVC	316 SS				
	D	7 & 8	PVC						
	G	All							
H_2SO_4 Applications	D & G	All	PVC	PVC	PVDF	Aflas/Viton	CA 20	CA 20	
316 SS***	D	2	316 SS	316 SS	316 SS	PTFE	316 SS	316 SS	
		4					316 SS		
		7 & 8				Viton	316 SS		
	G	5							
		6 & 7				PTFE			
Caustic Applications	G	5	PVC	PVC	PVDF	EPDM	PVC	Ceramic	
		6 & 7			PVC				
Fluoride Applications	G	5	PVC	PVC	PVDF	Viton	PVC	PTFE	
		6 & 7			PVC				

* Note: A polyethylene dimensional spacer is used in all plastic D2 and D4 check valves.
** Hastalloy C spring
*** ETL Certified to conform to ANSI/NSF STD 50 when using these liquid end materials.

Series G, Dependable and Versatile



The LMI Series "G" pump has proven its exceptional value over years of solid performance in a wide range of applications and industries. Water treatment chemicals, process additives, acids, out-gassing fluids, slurries, and many more applications are all handled with ease by this robust metering pump design. Your local distributor can assist you in applying the SD & SG metering pumps to your process.

Accessories



Safety Valves
Protect pump and piping from overpressure.



Back Pressure Valves
Provide smooth, artificial pressure in pump discharge line for atmospheric or low pressure systems to ensure pumping accuracy.



Pulsation Dampeners
Minimize pressure and flow surges in the pump discharge. When applied to pump inlet, more favorable NPSH conditions result.



Calibration Columns
Allow periodic verification of pump performance during routine checks or after system maintenance.

LMI MILTON ROY

201 Ivyland Road • Ivyland, PA 18974-0577 • ph: 215.293.0401 • fax: 800.327.7563
www.lmipumps.com • email: info@lmipumps.com

©2004, 2012 Milton Roy Company

Lit# 1968.E 9/2012