Emotron M20
Shaft power monitor



Instruction manual
English

Contents

1 Inside the Box 3

2 Safety 4

3 Description 5

4 Getting Started 7

4.1 Please note 7
4.2 Connection and set-up before first start 7
4.3 First start 8
4.4 Manual setting of alarm levels, alternative A 9
4.5 Manual setting of alarm levels, alternative B 10
4.6 Manual setting of alarm levels, alternative C 10

5 Wiring 11

5.1 Alternative example for single-phase connection 13
5.2 Example - digital input 14

6 Selection of Current Transformer 14

6.1 Motors less than 100 A 14
6.2 Motors greater than 100 A 17

7 Operation 19

7.1 Overview 19
7.2 Window menu 20
7.3 How to change a value 21

8 Programming 22

8.1 Set measurement unit, kW or HP 22
8.2 Setting rated motor power and current (window 41 and 42) 24
8.3 Setting number of phases (window 43) 25
8.4 Monitor function (window 05) 25
8.5 Setting the Start Delay (window 31) 27

8.6 Setting alarm levels with Auto set 28
8.7 Setting the Response Delay (windows 32 and 34) 29

9 Advanced Features 31

9.1 Setting alarm levels manually (windows 11-14) 31

10 Troubleshooting 41

11 Technical Data 43

12 Parameter List 48

13 Service 51

1 Inside the Box

Please check the delivery. Despite the fact that all products from CG Drives & Automation are carefully inspected and packed, transport damage may occur:

- Your shipment should contain the Emotron M20 shaft power monitor, a current transformer, 2x terminal covers (option*) and this instruction manual.
- Check carefully that the equipment ordered complies with the motor's input voltage and that the current transformer rating is as stated on the delivery packaging.
- Check that the contents have not been damaged during shipping.
- If something is missing, or has been damaged, contact the supplier as well as the forwarding agent within 48 hours of receipt.

NOTE: If in doubt contact your supplier before installing or commissioning the product.

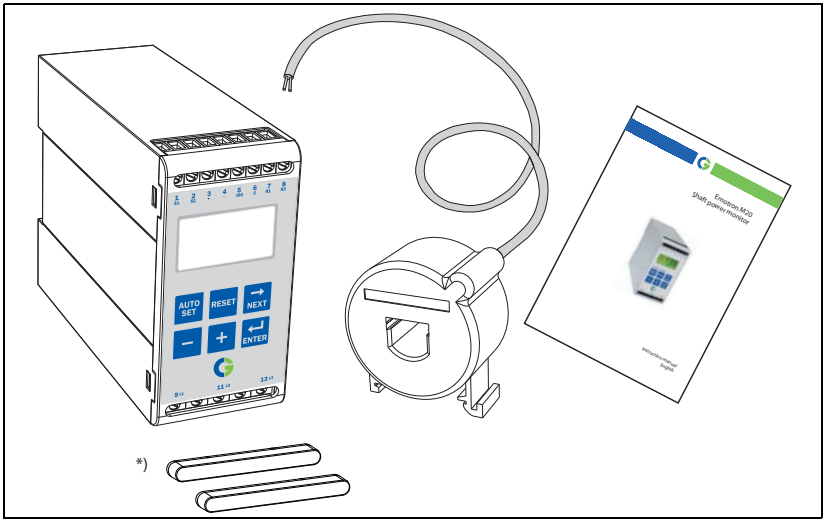

2 Safety

- Study this manual thoroughly before installing and using the monitor.
- The monitor must be installed by qualified personnel.
- Always disconnect supply circuits prior to installing.
- The installation must comply with standard and local regulations.
- Pay special attention to the information in this chapter and the parts marked CAUTION in the Operation and Programming chapters.
- Check that the monitor and the equipment are correctly connected before it is taken into use.
- Should questions or uncertainties arise, please contact your local sales outlet or see chapter 13, Service.
- Faults that arise due to faulty installation or operation are not covered by the warranty.

NOTE: Removing or tampering with the seal on the housing will invalidate the warranty.

3 Description

This instruction manual describes the installation and commissioning of the Emotron M20 shaft power monitor. The Emotron M20 supervises induction motor driven equipment and provides warnings when abnormal conditions are detected. It protects for example, pumps and other equipment. The M20's ability to provide reliable monitoring and protection ensures that production equipment is optimized and expensive breakdowns and interruptions are minimized.

The Emotron M20 uses the motor as its own sensor and no external sensors or extra cabling are required. Due to the special method of subtracting motor power losses, the monitor is able to accurately measure the shaft power supplied by the motor to the application. This advanced technique allows the M20 to monitor only the "application" load rather than the "total" motor load, which includes the varying motor losses.

The shaft power is calculated by measuring motor input power, and subtracting the motor power loss calculated using a unique principle. The shaft power output is indicated on the monitor display in kW or HP, or as a percentage of rated power. Calculating shaft power gives more reliable supervision than non-linear techniques, such as current and phase angle measurements. Current measurement is only sufficient at high motor loads and phase angle only at low loads. Input power is sometimes called true or real power. Input power is linear, but ignores motor power loss.

The M20's analogue output and two relay outputs allow the combination of direct and indirect control. The unit offers high accuracy in the event of very small load variations. The analogue output signal can be used to scale the machine load to represent the actual working range.

The monitor is very easy to install and set up and should be mounted on a standard DIN rail. It is also very easy to use. The "Auto set" function makes it possible to adjust the monitor automatically by pressing just one key.

The M20 provides complete flexibility in terms of the type of protection required for your application. You may select either overload and underload protection or simply overload with pre-alarm or underload with pre-alarm. Independent response delays can be selected for both overload and underload protection. Additional flexibility is provided in the form of programmable output relays, number of start attempts, number of reversing attempts etc.

The Emotron M20 shaft power monitor offers advanced multi-function monitoring and a display for load indication and parameter setting. It is ideal for
protecting many different applications including pumps in general, centrifugal pumps, magnetic pumps, screw and impeller pumps, mixers, scrapers, crushers, conveyor systems, etc.

For further information, please see www.emotron.com.

4 Getting Started

4.1 Please note

1. Pay special attention to the safety section in this manual and parts marked CAUTION.
2. Check that motor/supply voltage corresponds to values on the monitor product label at the side of the unit.
3. Make a note of the motor's rated power and full load amps from its nameplate. Confirm that the current transformer supplied is of the correct size according to tables 1 and 2 in chapter 6 of this manual.

4.2 Connection and set-up before first start

1. Connect the Emotron M20 according to chapter 5 and Fig. 1.
2. Make sure all safety measures have been taken and switch on the supply voltage.
3. Use the NEXT key to scroll through the menu. Press and hold the ENTER key and press the NEXT key to scroll back.
4. Set rated motor power and current in windows 41 and 42. Additional settings to be programmed are discussed in chapter 8.
5. Set monitor function in window 05, overload and underload or only underload or only overload. See chapter 12, Parameter list, for range and default values.
6. Set start delay and response delay in window 31 and 32/34.
7. Compare all set values with the parameter list in chapter 12 to confirm that all relevant values are set. Advanced features will be found in chapter 9.

4.3 First start

CAUTION!
Make sure that all safety measures have been taken before switching on the supply voltage and starting the motor/machine in order to avoid personal injury.

1. Start the motor/machine and let it run at normal load, until the Start Delay has expired.
2. Press AUTO SET for 3 seconds.

Hint!

Short-circuit the output relays during the set-up; this prevents the equipment from stopping unintentionally.

More Hints!

The monitor can be set in three different ways:

1. **Automatically** by pressing the Auto set key as described above. The Auto set function performs a measurement (momentarily) of the actual load and sets relevant alarm levels for this actual load plus/minus the "margins" (Default; Max +16% and Min -16%).
2. If Auto set is used as above, the **margins can be re-adjusted** manually (windows 21-24). When the margin values are changed a new Auto set must always be performed to activate the changes and the new margins. More information is provided in chapter 9, Advanced Features.
3. **Manual setting** of alarm levels (windows 11-14). The alarm levels can be set manually, without using the Auto set. See sections Manual setting of alarm levels, alternative A, B and C.

NOTE: If any window parameter is manually adjusted, the display will flash the new value to indicate that a change has been made. The Enter key must be pressed for the M20 to accept this new value.

4.4 Manual setting of alarm levels, alternative A

Running and setting at normal load

- Start the motor/machine or pump and let it run at normal load, until the Start Delay (window 31) has expired.
- Read off the load on the monitor display, e.g. 65%, window 01 (or kW/HP).
- Set the max. main alarm level to something between e.g. 70-85% in window 11. This must be set to the actual application requirements, maximum load for machine/process.
- Set the min. main alarm level to something between e.g. 60-45% in window 14. This must also be set to the actual application requirements.

See also Fig. 7 in section 8.4, Over- and underload monitor.

4.5 Manual setting of alarm levels, alternative B

Running and setting at maximum load as well as at minimum load

- Start the motor/machine or pump and let it run at maximum load, until the Start Delay has expired. E.g. fill the conveyor with maximum allowed goods.
- Read off the load on the monitor display, e.g. 85% (window 01).
- Set the max. main alarm level to something between e.g. 90-95% in window 11. This must be set to the actual application requirements, maximum load for both machine and processes.
- Then run the motor/machine and let it run at minimum load, e.g. idling, until the Start Delay has expired.
- Read off the load on the monitor display, e.g. 30%.
- Set the min. main alarm level to something between e.g 25-20% in window 14. This must also be set to the actual application requirements.

See also Fig. 7 in section 8.4, Over- and underload monitor.

4.6 Manual setting of alarm levels, alternative C

It is also possible to approximately calculate or estimate the alarm levels. If e.g. the motor used is 22 kW, 22 must be set in window 41. This means that each percentage point corresponds to 220 W (22 kW/100 = 220 W), and the alarm limits in window 11- 14 can be set in steps of 220 W. If the max. alarm level is set to 80% in this example, the monitor will emit an alarm and stop the machine at approx. max. 17.6 kW shaft output power.

NOTE: If the pre-alarm is not used, the values for Min. pre-alarm and Max. pre-alarm can be set to 0 (window 13) and 125% (window 12) respectively. This will eliminate pre-alarm warning indications in the monitor display when not in use.

See also Setting alarm levels manually in chapter 9, Advanced Features.

5 Wiring

The following wiring diagram provides an example of how the M20 can be connected to control the start/stop circuit of a three-phase motor, Fig. 1. Connections to a single-phase motor are described later in this manual (Fig. 2) as are the programming changes necessary for such applications. The default setting for the M20 is 3-phase.

1. The current transformer CTMxxx must be placed in the same phase that is connected to terminal 9, phase L1, see Fig. 1. Failure to follow this requirement will result in the monitor failing to function.
2. For single-phase connection see fig 2.

When using DC voltage, terminal 6 should be connected to negative polarity (ground) and terminal 5 to positive polarity (max. 48 VDC). See also Alternative auxiliary circuit (Fig. 16) in chapter 9.

Note: The current transformer (CTMxxx) must be placed in the same phase that is connected to terminal 9, phase L1, see Fig. 1.

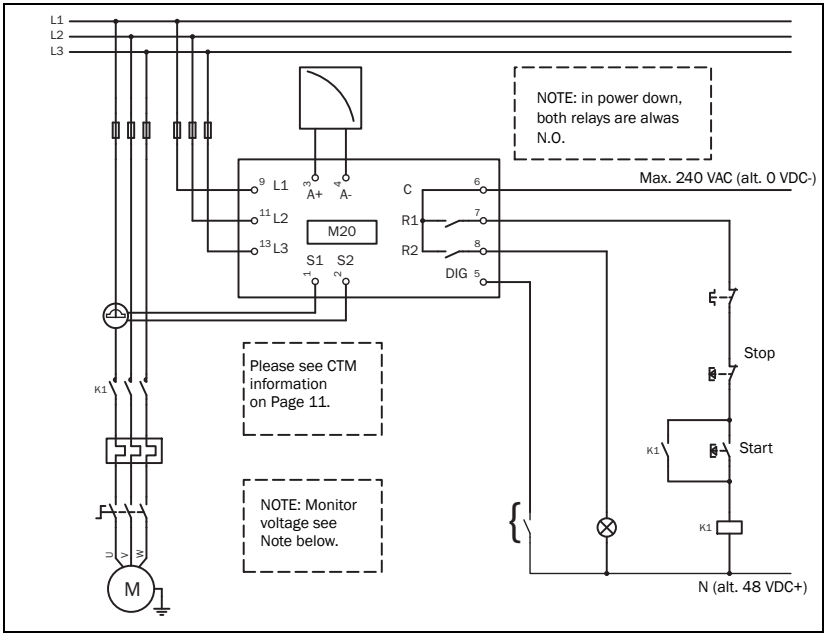

Fig. 1 Connection example

NOTE: If the START/STOP is connected as per Fig. 1, it is recommended that terminals 6 and 7 be bypassed during programming. After the programming is completed the bypass must be taken out. Make sure that the monitor voltage range e.g. 3x380-500 VAC matches the connected motor/line voltage, e.g. 3x 400 V.

Please use the enclosed plastic (rubber) insert (if ordered, optional) to cover the monitor terminals.

5.1 Alternative example for single-phase connection

This wiring example shows the connections required for single-phase applications. Refer to Fig. 1 for the remaining wiring.

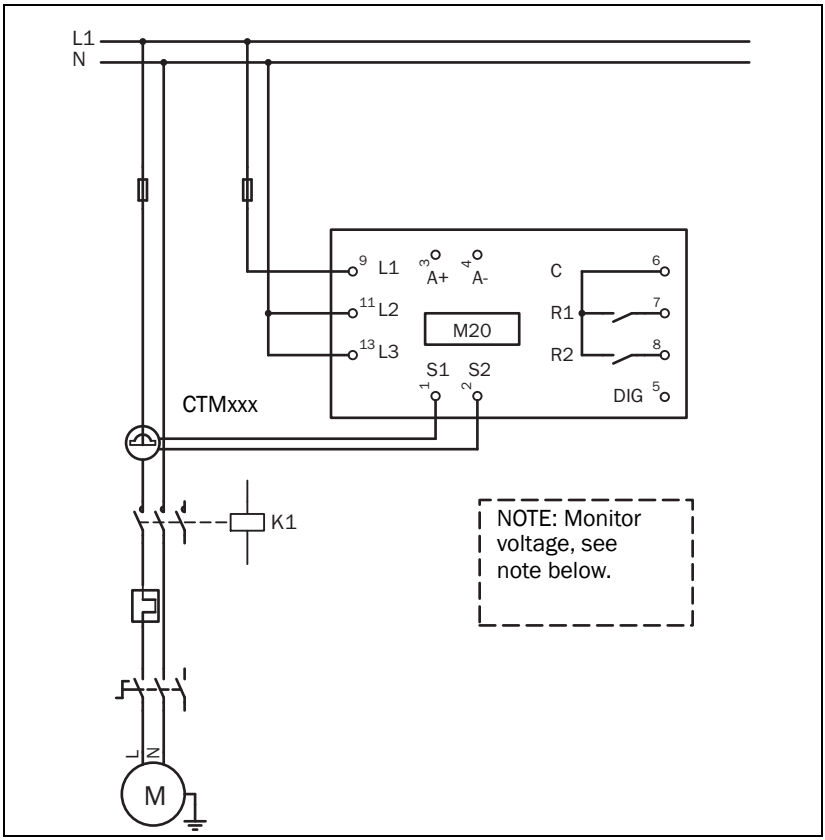

Fig. 2 Single-phase connection example.

NOTE: In Fig. 2 make sure that the monitor voltage range e.g. 1x100-240 VAC matches the connected motor/"line – neutral" voltage, e.g. 1x 230 V.

5.2 Example - digital input

The digital input uses terminals 5 (DIG) and 6 (C - reference). Either a VAC or a VDC signal may be used. Connect + to terminal 5 (DIG) and - to terminal 6 for VDC signal. Please note the polarity when DC voltage is used. See also Fig1 and terminal 6: Max. 240 VAC (or 0 VDC-) and on terminal 5: N (or 48 VDC+). See also chapter 9, Advanced Features.

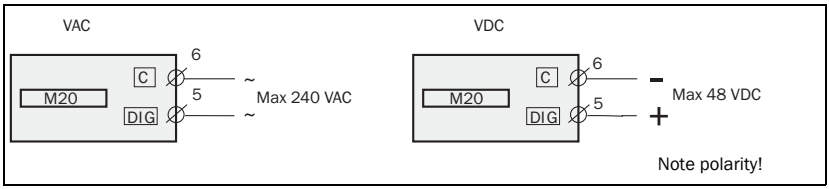

Fig. 3 Wiring example for digital input.

6 Selection of Current Transformer

6.1 Motors less than 100 A

1. Check the rated motor current on the motor plate.
2. Compare this value with the current in Table 1.
3. From Table 1, select the current transformer and the appropriate number of windings.

Fig. 5 shows the different types of current transformer (CT) windings. In Fig. 5:1 the motor wire is just drawn through the CT, in the text and tables below this is described as 1 (one) winding. Fig. 5:2 shows a CT with 2 windings and Fig. 5:3, 3 windings. In other words the number windings is equal to the number of times the motor wire “L1” is drawn through the hole of the current transformer.

NOTE: Maximum length of the CTM cable is 1 m (39 inches).

Example

- Rated motor current = 12 A.
- Select 10.1-12.5 A from the first column in Table 1.
- This gives:
  CTM025 with 2 windings (the motor wire is drawn through the CT's hole twice).

Table 1 Motors and CT less than 100 A

RATED MOTOR CURRENT [A]	CURRENT TRANSFORMER TYPE and NUMBER OF WINDINGS			
	CTM 010	CTM 025	CTM 050	CTM 100
0.4 – 1.0	10			
1.01 – 2.0	5			
2.01 – 3.0	3			
3.1 – 5.0	2			
5.1 – 10.0	1			
10.1 – 12.5		2		
12.6 –25		1		
26 – 50			1	
51 – 100				1

In order to ensure an accurate calibration of the M20, it is essential that you use the correct CTM and apply the exact number of windings in accordance with the above table.

NOTE: Normally the appropriate Current Transformer will have been ordered and shipped with the M20. Check that this is the case; contact the supplier if in doubt.

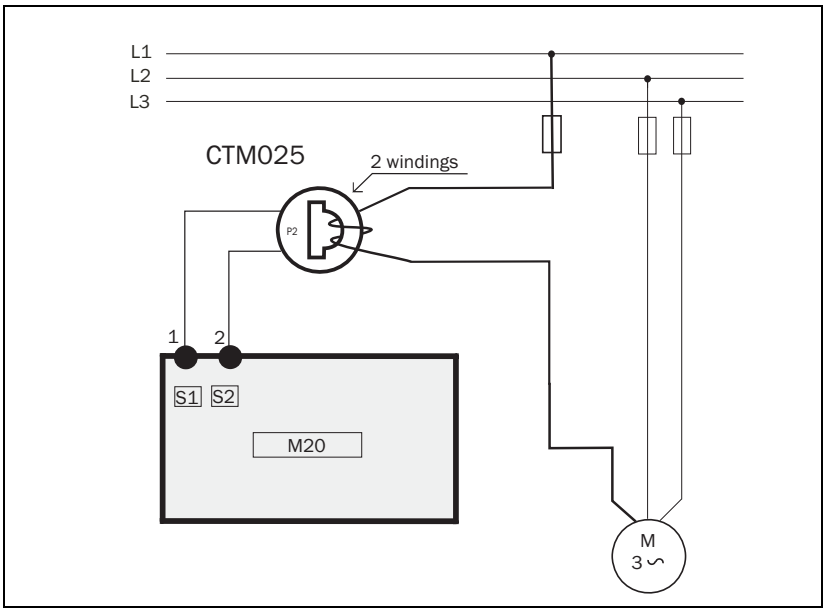

Fig. 4 Example CTM 025 with 2 windings for a 12 A motor

NOTE: The current transformer connection and orientation are not polarity sensitive, but must be connected to the same phase that is being referenced for terminal 9 of the M20.

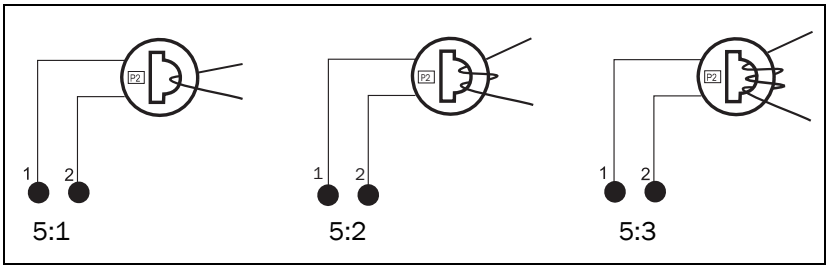

Fig. 5 Example 1, 2 and 3 windings.

6.2 Motors greater than 100 A

1. Check the rated motor current on the motor plate.
2. Compare this value with the current in Table 2.
3. Select the primary and secondary current transformer and the appropriate number of windings from the columns in Table 2.

Please note that the ratio of the primary transformer must be exactly as provided in the table below, otherwise the monitor power calculations will be inaccurate. This will affect power readings, settings etc.

Example

- Rated motor current = 260 A.
- Select 251-500 A from the first column in Table 2.
- This gives:
  - Primary transformer 500:5, 1 winding. (The motor wire is drawn through the primary transformer once).
  - CTM010 with 2 windings. (The wire from the primary transformer is drawn through the hole in the CT, "CTM10", twice).

Table 2 CT greater than 100 A.

RATED MOTOR CURRENT [A]	CURRENT TRANSFORMER TYPE and NUMBER OF PRIMARY WINDINGS
101 – 150	150:5 + CTM 010 1 + 2
151 – 250	250:5 + CTM 010 1 + 2
251 – 500	500:5 + CTM 010 1 + 2
501 – 999	1000:5 + CTM 010 1 + 2

NOTE: Check that the appropriate Current Transformers has been ordered and shipped with the M20. Contact the supplier if in doubt.

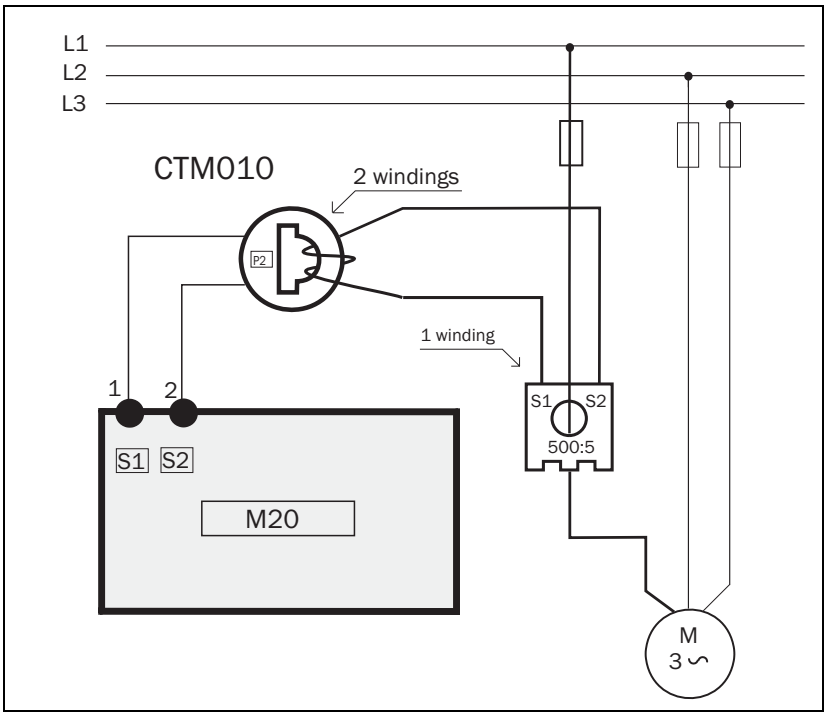

Fig. 6 Example of a CTM 010 with 2 windings and a primary transformer 500:5 with 1 winding for a 260 A motor.

NOTE: The transformer connection and orientation are not polarity sensitive, but must be connected to the same phase that is being referenced for terminal 9 of the M20.

7 Operation

Make sure the enclosed plastic (rubber) insert (if ordered, optional) covers the monitor terminals before you start programming.

7.1 Overview

Control Terminals

1	S1	Current transformer input
2	S2	Current transformer input
3	+	Analogue output
4	-	Analogue output
5	DIG	External RESET or AUTO SET or Block Pre-Alarm
6	C	Common: RELAY, DIG
7	R1	Main Alarm Relay 1*
8	R2	Pre-Alarm Relay 2

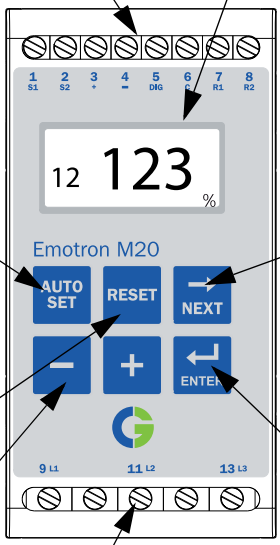

Display

- Function (window) number
- Function Value
- Warning signal
- Start, response delay or block timer active
- Parameter locked
- V Voltage indicator
- A Current indicator
- mA Milliampere indicator
- kW Kilowatt indicator
- S Second indicator
- % Per cent indicator

AUTO SET Key

Press for 3 seconds during normal and stable load to apply the automatic setting of the alarm levels. Not available if Parameter Locked.

NEXT Key

Proceeds to next window. If no key is pressed for 1 minute the display returns to window 01 automatically. Scroll back by pressing and holding ENTER at the same time as the NEXT key is pressed.

ENTER Key

Confirm (save) changes.

RESET Key

To reset ALARM

+/- Keys

For increasing and decreasing value

Monitor Supply Terminals

9	L1 Motor phase
11	L2 Motor phase
13	L3 Motor phase

After Power up window 01 appears, the actual load value is shown.

Default view (example shows 54% load):



Use the NEXT key to scroll through the function menu.

* For alternative relay function, see Special functions in chapter 9.

7.2 Window menu

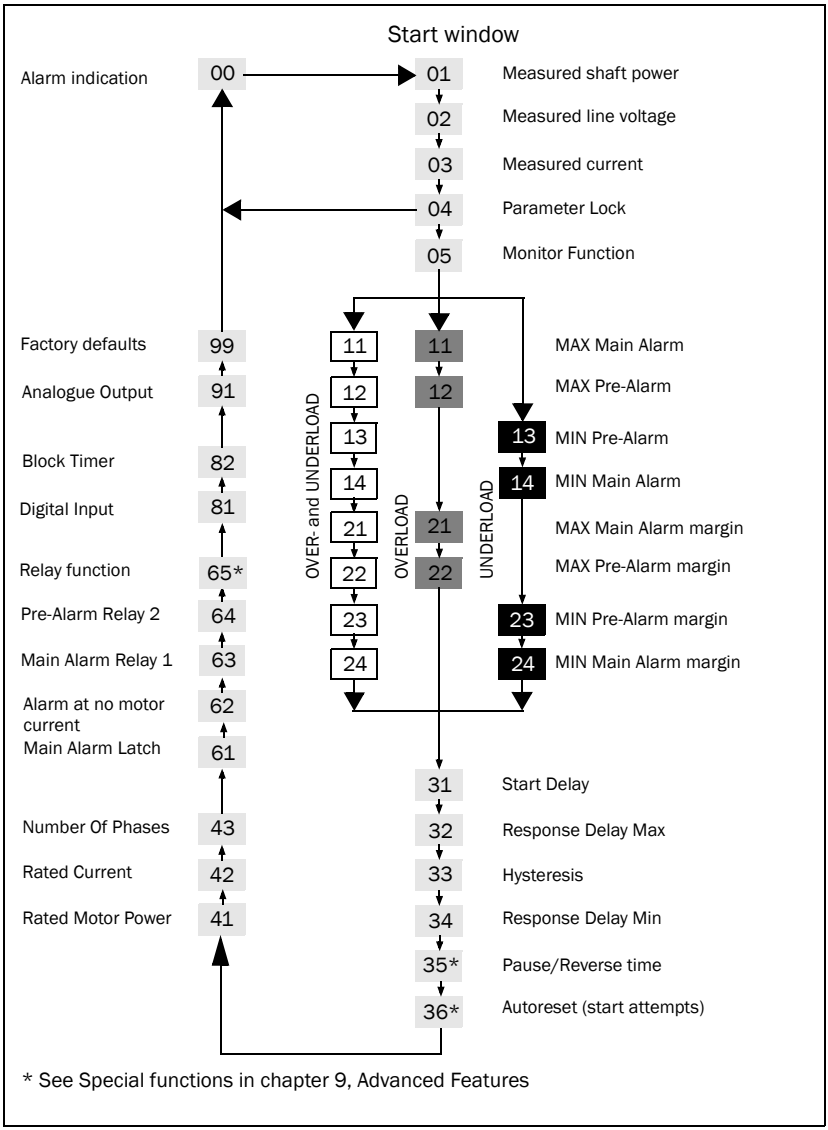

* See Special functions in chapter 9, Advanced Features

- The Alarm window 00 only appears if an Alarm output is active.
- The Actual Load window 01 appears after power up.
- Use the NEXT key to scroll through the menu. Scroll back by pressing and holding ENTER at the same time as the NEXT key is pressed.
- The Actual Load window (or alternative alarm window) will appear automatically if no keys are pressed for longer than 1 minute.
- If the Parameter Lock is on, only windows 00 (if alarm active) 01 02 03 04 are visible.
- Window 05 selects the monitor function, see section 8.4.

7.3 How to change a value

Example: setting the rated motor current in window 42.

1. Press NEXT until the window number 42 appears.



2. Press + or − until the desired value is reached (e.g. 23 A), value flashes.



3. Press ENTER to confirm and save the change, value stops flashing.

NOTE: If the value is NOT to be changed, press the NEXT key.

CAUTION!
In order to avoid personal injury, make sure that all safety measures have been taken before switching on the supply voltage and starting the motor/machine.

8 Programming

8.1 Set measurement unit, kW or HP

8.1.1 Selecting the unit of measurement

The unit of measurement can be set to kilowatts or horsepower both as absolute or relative values. This setting is valid for the alarm levels, rated motor power and the actual load read-out in window 01.

Measurement unit	Read-out load window 01	Rated power window 41	Alarm levels windows 11, 12, 13, 14
Kilowatt relative value (def.)*	%	kW	%
Horsepower absolute value	HP	HP	HP
Horsepower relative value*	%	HP	%
Kilowatt absolute value	kW	kW	kW

* Measured shaft power as % of rated power.

CAUTION!
In order to avoid personal injury, make sure that all safety measures have been taken before switching on the supply voltage and starting the motor/ machine.

Programming

1. Go to window 01.
2. Press and hold RESET and + simultaneously for 3 seconds.
3. The next unit of measurement is set and appears for 2 sec (see examples).

Repeat to select the desired measurement unit according to the table.

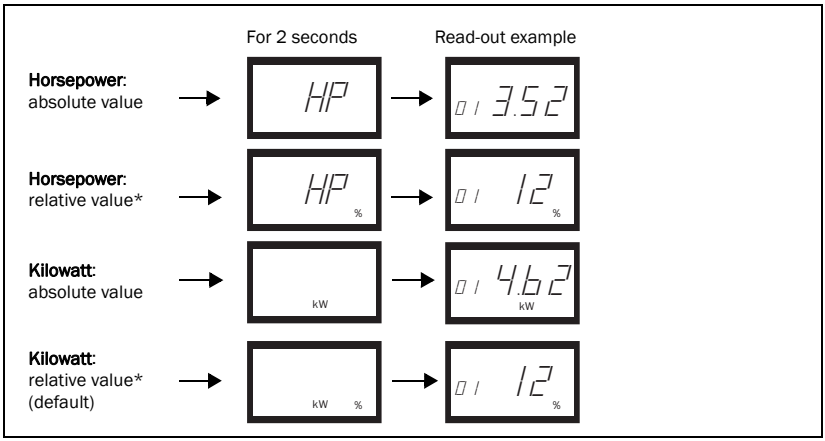

* Measured shaft power as % of rated power.

8.2 Setting rated motor power and current (window 41 and 42)

The rated motor power and the rated motor current must be set in windows 41 and 42.

Example motor plate:

TYPE: T56BN/4		NR: 948287		Prot. IP: 54	
Serv: S1		Cos φ: 0.78		Is. Cl:F	
V:Y/Δ	Hz	HP	kW	RPM	A:Y/Δ
240/415	50	3	2.2	1400	5.6/9.4
260/440	60	3	2.2	1680	5.8/9.1
ASYNCHRONOUS THREE-PHASE MOTORS					

8.2.1 Programming

1. Go to window 41 (default = 2.2 kW).
2. Press − or + to set the rated motor power as indicated on the motor plate (see example).
3. Press ↵ ENTER to confirm the change.
4. Go to window 42 (default = 5.6 A).
5. Press − or + to set the rated motor current as indicated on the motor plate (see example).
6. Press ↵ ENTER to confirm the change.

8.3 Setting number of phases (window 43)

The number of phases must be set according to the number of motor phases. Default is 3 phases, see also chapter 5, Wiring.

8.3.1 Programming

1. Go to window 43 (default = 3PH).



2. Press − or + to set the number of phases to 1 if a single-phase motor is used.

3. Press ↵ ENTER to confirm the change.



8.4 Monitor function (window 05)

Monitor (Protection)	Indication in window 05	Alarm	Output Relay (default)
OVER- and UNDER-LOAD (default)	—	MAX Main Alarm	Relay 1 (NC): 6-7
	—	MAX Pre-Alarm	Relay 2 (NO): 6-8
		MIN Pre-Alarm	Relay 2 (NO): 6-8
		MIN Main Alarm	Relay 1 (NC): 6-7
OVERLOAD	—	MAX Main Alarm	Relay 1 (NC): 6-7
		MAX Pre-Alarm	Relay 2 (NO): 6-8
UNDERLOAD	—	MIN Pre-Alarm	Relay 2 (NO): 6-8
		MIN Main Alarm	Relay 1 (NC): 6-7

If separate output relays are required for overload and underload alarms, please refer to chapter 9 and chapter 12.

Overload and underload Monitor

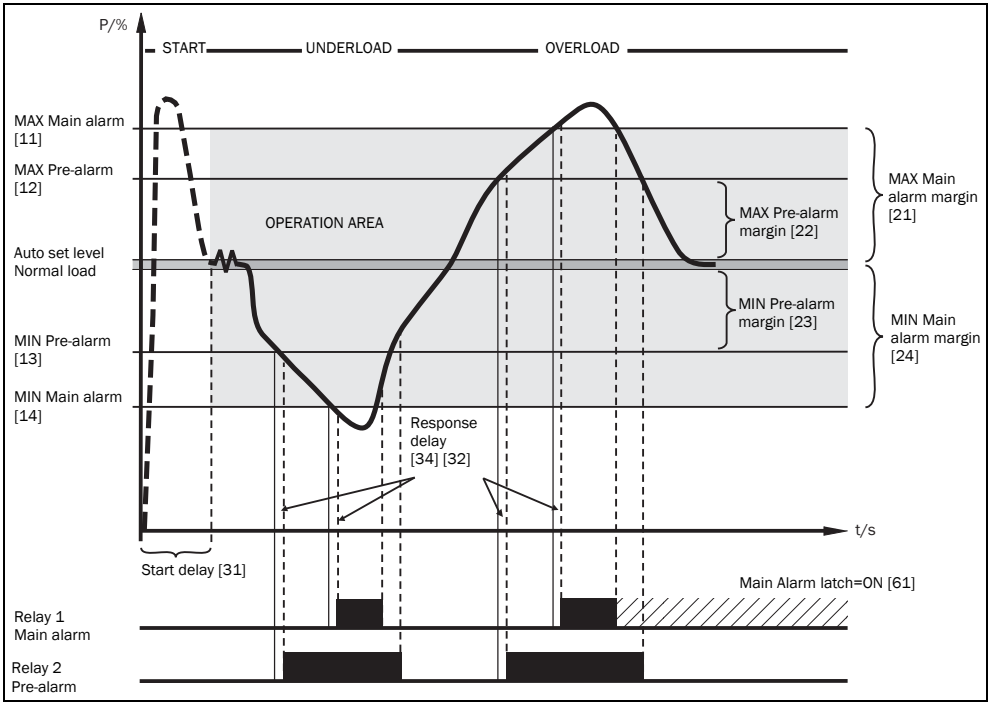

Fig. 7 Overload and underload monitor.

Programming

1. Go to window 05. The default selection is Overload and Underload monitor.
2. Press **−** or **+** to select underload or overload monitor.



3. Press **ENTER** to confirm the change.

8.5 Setting the Start Delay (window 31)

To avoid false alarms during start up a Start Delay must be set to allow the motor and machine to speed up and to allow the power in-rush currents.

Programming

1. Determine in seconds how long it takes for the motor and machine to reach speed and for the power in-rush to pass. This will be the Start Delay.
2. Go to window 31 (default = 2.0 s).
3. Press − or + to set the determined Start Delay time in seconds.
4. Press ↵ ENTER to confirm the change.

If the monitor is being used on a self-priming pump, it may also be necessary to set the Start Delay long enough to allow the pump to become fully primed.

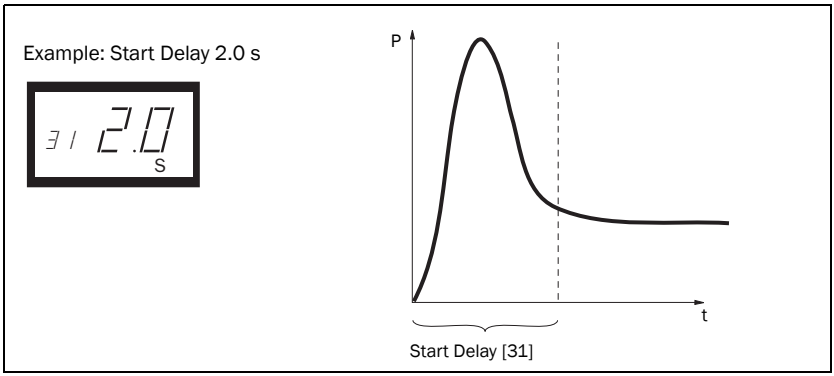

Fig. 8 Start Delay.

8.6 Setting alarm levels with Auto set

The Auto set command performs a measurement (momentarily) of the actual motor load and automatically sets the relevant alarm levels depending on the selected monitor function.

Protection (Monitor function window 05)	Alarm	Margin Value (Default margins)	Margins (Windows)	Alarm Level at Auto set
OVER- and UNDERLOAD (Default)	MAX Main Alarm	16%	21: MAX Main Alarm margin	Normal machine load + Window 21
	MAX Pre-Alarm	8%	22: MAX Pre-Alarm margin	Normal machine load + Window 22
	MIN Pre-Alarm	8%	23: MIN Pre-Alarm margin	Normal machine load - Window 23
	MIN Main Alarm	16%	24: MIN Main Alarm margin	Normal machine load - Window 24
OVERLOAD	MAX Main Alarm	16%	21: MAX Main Alarm margin	Normal machine load + Window 21
	MAX Pre-Alarm	8%	22: MAX Pre-Alarm margin	Normal machine load + Window 22
UNDERLOAD	MIN Pre-Alarm	8%	23: MIN Pre-Alarm margin	Normal machine load - Window 23
	MIN Main Alarm	16%	24: MIN Main Alarm margin	Normal machine load - Window 24

Programming

1. Start the motor and let it run at the normal machine load until the Start Delay has expired.
2. Press AUTO SET for 3 seconds. This can be done in any window.

3. The display shows “SEt”, to confirm that the Auto set level has been measured and the alarm levels have been set. The display reverts to window 01.



4. If the alarm levels are too high or too low, readjust the appropriate MARGINS (see table) and perform a new Auto set. Alternatively, alarm levels can be set manually, see chapter 9.

8.7 Setting the Response Delay (windows 32 and 34)

A Response Delay allows the machine to remain in an over- or underload condition for a specific time before the alarm relays are activated. Set the response delay for the overload condition in window 32 (max.), and set the response delay for the underload condition in window 34 (min.). The default value for both windows are 0.5 s. The valves may be adjusted upwards to avoid triggering a “false alarm”.

Programming

1. Determine in seconds the response delay required for both overload and underload conditions. This is normally determined by the unique properties and behaviour of each application.
2. Go to window 32 (overload, default = 0.5 s).
3. Press − or + to set the determined Response Delay time in seconds.
4. Press ↵ ENTER to confirm the change.

The response delay for the underload condition (min.) is set in window 34 in a similar way.

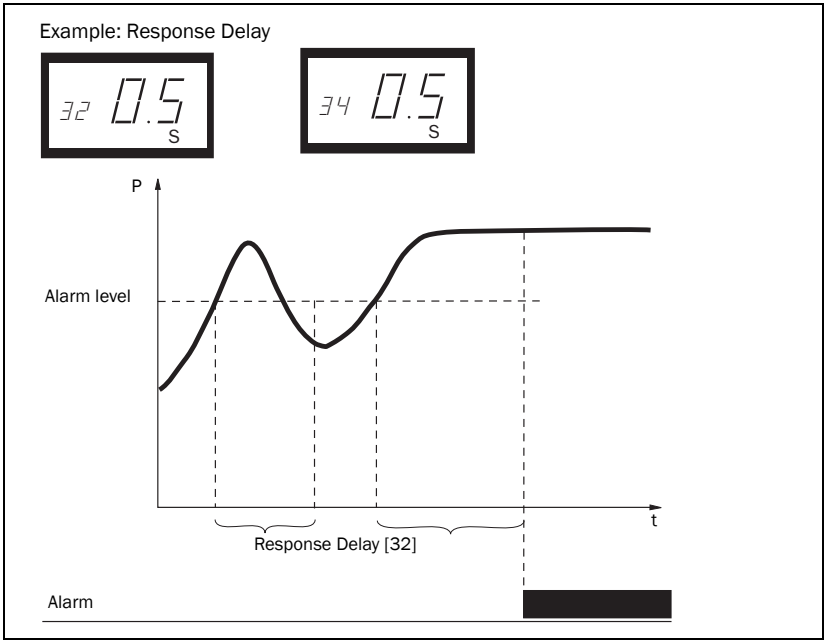

Fig. 9 Response Delay.

9 Advanced Features

9.1 Setting alarm levels manually (windows 11-14)

The alarm levels can be set manually, without using the Auto set. These levels can also be readjusted, e.g. for fine-turning, after an Auto set has been performed. See also section 4.3 to 4.6.

Protection (Monitor function window 05)	Alarm levels (Window)	Default
OVER- and UNDERLOAD (Default)	11: MAX Main Alarm	100%
	12: MAX Pre-Alarm	100%
	13: MIN Pre-Alarm	0%
	14: MIN Main Alarm	0%
OVERLOAD	11: MAX Main Alarm	100%
	12: MAX Pre-Alarm	100%
UNDERLOAD	13: MIN Pre-Alarm	0%
	14: MIN Main Alarm	0%

Setting margins (windows 21-24)

The margins for the Auto set can be changed manually. After the adjustment, the Auto set action must be performed again.

Protection (Monitor function window 05)	Window	Default
OVER- and UNDERLOAD (Default)	21: MAX Main Alarm margin	16%
	22: MAX Pre-Alarm margin	8%
	23: MIN Pre-Alarm margin	8%
	24: MIN Main Alarm margin	16%
OVERLOAD	21: MAX Main Alarm margin	16%
	22: MAX Pre-Alarm margin	8%
UNDERLOAD	23: MIN Pre-Alarm margin	8%
	24: MIN Main Alarm margin	16%

Setting hysteresis (window 33)

The hysteresis of an alarm level prevents the alarm relay "chattering" if the load fluctuates even in a normal "stable" condition. This also applies to a pre-alarm. This feature is normally only used if the main alarm latch (window 61) is set to Off. Default = 0%.

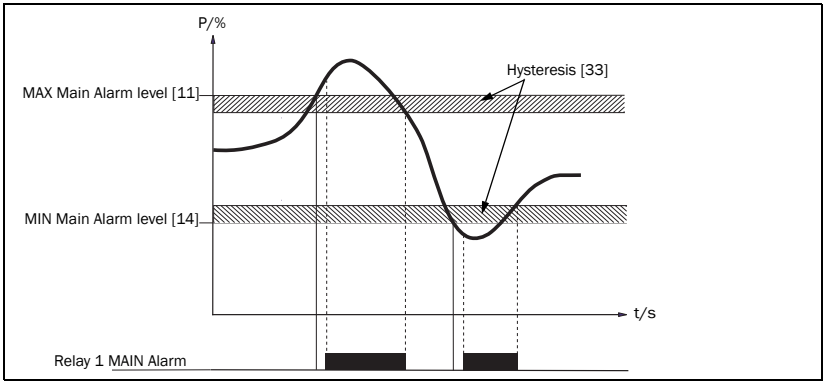

Fig. 10 Hysteresis

Setting main alarm latch (window 61)

The main alarm latch keeps the main alarm output active, even if the alarm condition has been removed. A latched alarm output can be reset by:

- The reset key
- External reset via digital input (see window 81).
- Switching off the power to the monitor (see also Wiring).

Default = Off.

Setting alarm at no motor current (window 62)

The alarm at no motor current gives an alarm if the motor current goes down to zero (62 = on). Default = Off (No alarm at no motor current).

Setting relay output (window 63 and 64 alt. 65)

The relay outputs R1 and R2 can be set to NO or NC contacts.

NOTE: If the power to the load monitor is switched off, the relay contacts are always in position NO.

If separate output relays are required for overload (max., relay R1) and underload (min., relay R2), see Special functions in chapter 9 and chapter 12.

Setting digital input (window 81)

The digital input can be set for:

RES: External RESET (Default)	To reset an alarm.
AU: External Auto set	To perform an Auto set with an external signal.
bLo: Block Pre-Alarm	To block the Pre-Alarm function and start the Block timer. If the input is high a Pre-Alarm is blocked, i.e. it is neglected. See also window 82.

Setting block timer (Window 82)

To set the timer for the blocking time after the Block command is released (see also window 81). Default = 0.0 sec.

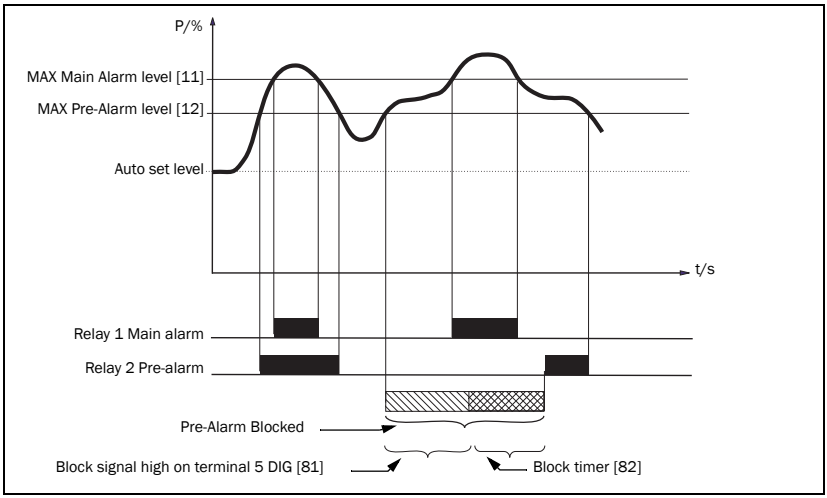

Fig. 11 Block timer

Setting analogue output (window 91)

The analogue output provides an analogue signal of either 0-20 mA or 4-20 mA which represents the motor shaft power. The signal can be inverted (20-0 or 20-4 mA). Full scale: rated motor power, see Fig. 12. To set P-span/scaling (full scale) see Fig. 13.

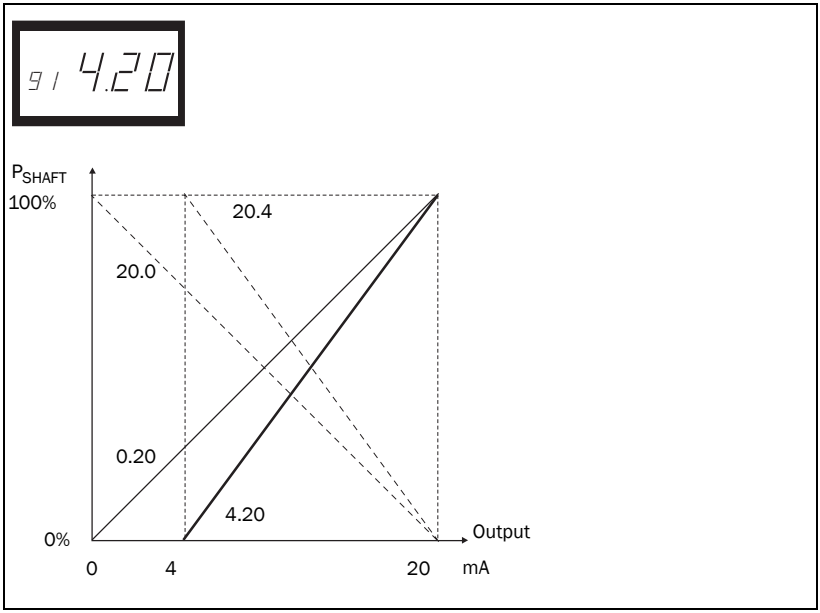

Fig. 12

Setting analogue output load range: P-span (window 92-93)

With windows 92 and 93 the full scale of the analogue output can be set according to the minimum and maximum load (P-span).

1. In window 91, press RESET and + for two seconds until “on” shows. Windows 92 and 93 are now active.

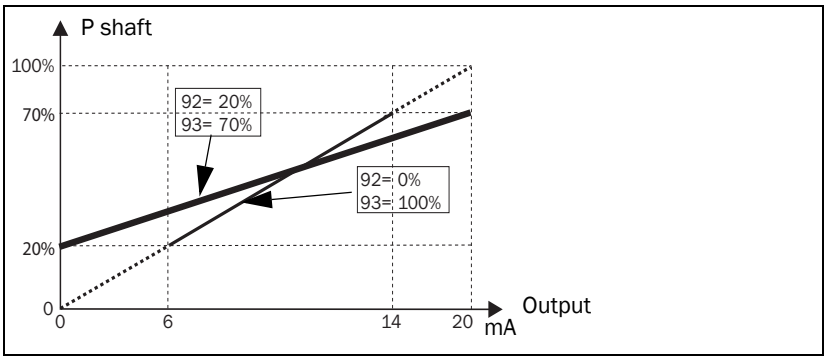

Fig. 13

2. Set the lowest load value in window 92 (e.g. 20%)
3. Set the highest load value in window 93 (e.g. 70%)

The full scale of the analogue output is now set between 20% and 70% load. See Fig. 13. To deactivate: Press RESET and + for two seconds until “Off” shows in window 91.Windows 92 and 93 are now inactive.

Locking parameters (window 04)

To avoid the parameter settings being changed unintentionally, the programming can be locked by entering the code “369” in window 04. Now only Load [01], Voltage [02] and Current [03] can be checked. Follow the same procedure to unlock the monitor. The Auto set key is disabled when parameters are locked. Auto set via digital input is always active if window 81 is set to AU (Auto set).



NOTE: The symbol appears in all windows.

Resetting to factory defaults (window 99)

The factory defaults are reset by entering “dEF” in window 99. If window 99 shows “USr” it indicates that the settings have been changed to user specific settings.

View alarm message (window 00)

In an alarm condition, the window 00 appears automatically. The window indicates the following alarm conditions. Window 00 flashes at all times.

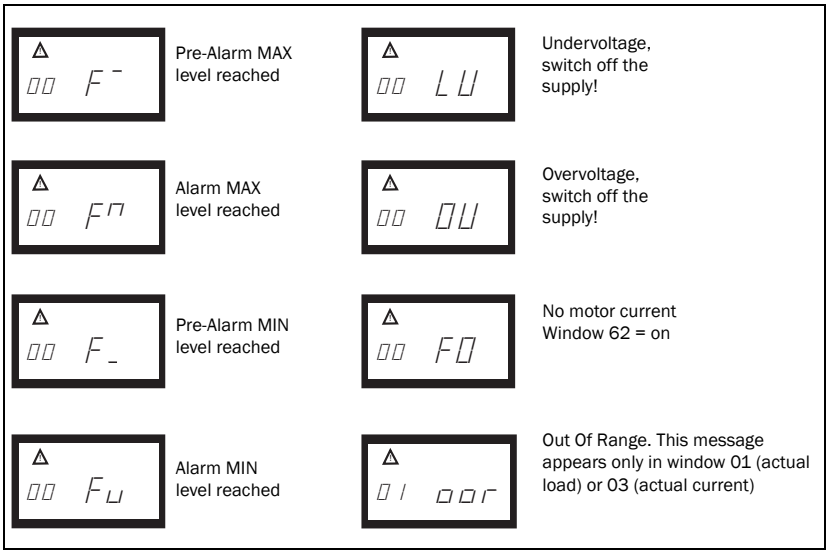

When the monitor is switched on (power up), the voltage on phases L1, L2 and L3 is checked. If the wrong voltage is detected, an LU (undervoltage) or OU (overvoltage) alarm is generated. No relay alarm will be indicated or activated.

Special functions (windows 35, 36 and 65)

Special functions are separate relays for overload and underload alarm/stop, start attempts and a reverse function with start attempts:

- Window 65 = 0, Normal M20
- Window 65 = 1, Separate relays for overload and underload alarm (DLM)
- Window 65 = 2, Reverse function

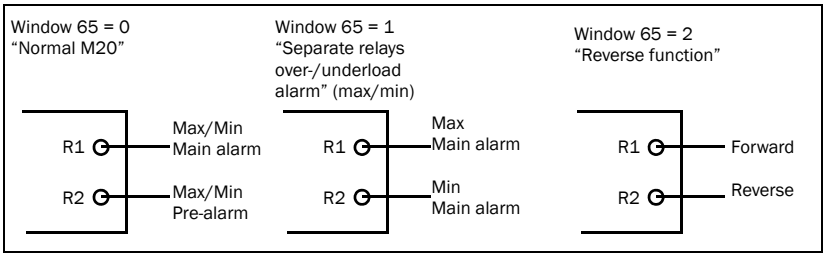

Fig. 14 Window 65 and relay functions

In all three cases the number of start attempts after a main alarm may be set in window 36. The pause time between start attempts may be set in window 35. This time is also used as the time to run the motor in the reverse direction when window 65=2.

The reverse function can be used to reverse e.g. a screw conveyor or pump when a "jam" occurs. Reversing the motor may remove the blockage. Should one reverse cycle not be enough to release the material, the M20 will repeat this operation up to a maximum of 5 cycles (window 36, 0-5 start attempts). Relay R1 = forward, relay R2 = reverse.

NOTE: For special handling of analogue output in reverse mode, see below.

The analogue output will go to its maximum e.g. 20 mA when the number of allowed start attempts has elapsed.

Resetting an alarm

A reset will cause the start attempt counter to be reset (new start attempts may be performed).

NOTE: In order to accomplish the above result, it will be necessary for a forward and reversing motor starter to be installed. See Fig. 15 Example of connection with a forward and reversing motor starter (contactor).

For more information contact your local sales outlet or visit us at:
www.emotron.com

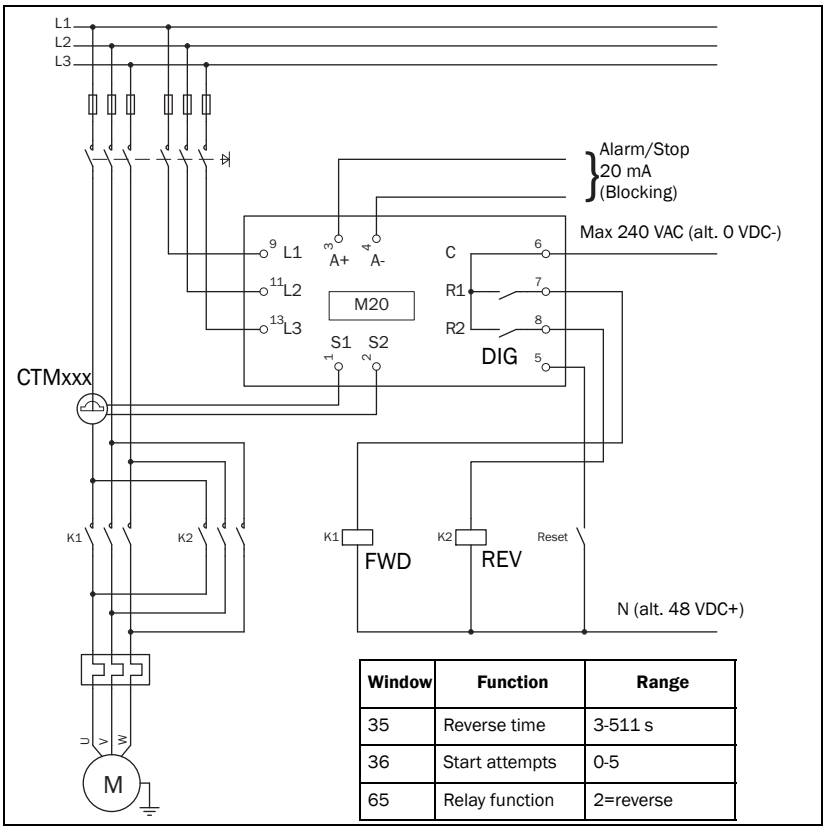

Window	Function	Range
35	Reverse time	3-511 s
36	Start attempts	0-5
65	Relay function	2=reverse

Fig. 15 Example of connection with a forward and reversing motor starter (contactor).

NOTE: In Fig. 15, R1 and R2 (K1 and K2) must not be energized/on at the same time as this will generate a short circuit. Therefore it is important that window 65 = 2 before the relays are connected to the contactors.

Alternative auxiliary circuit

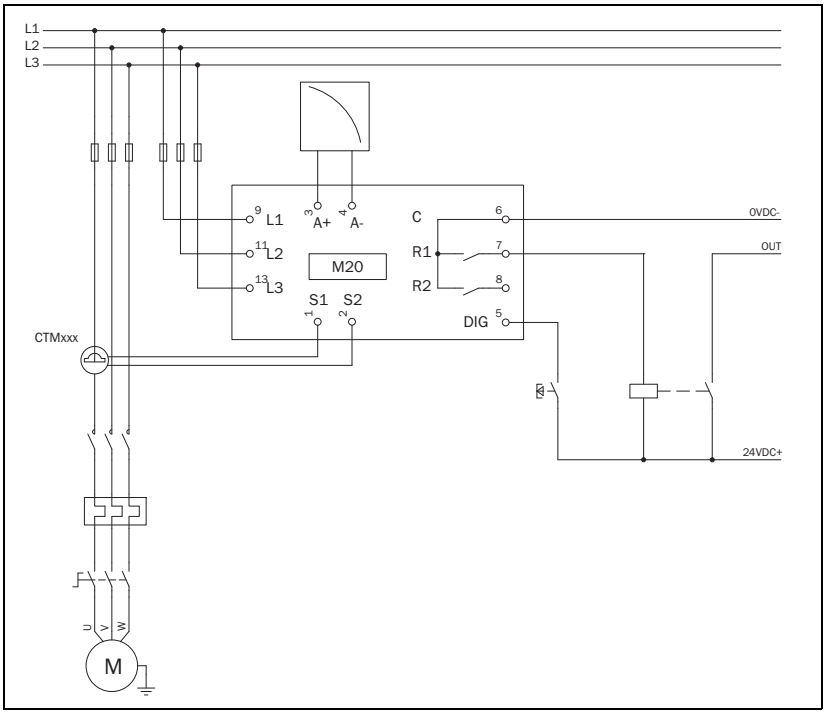

Fig. 16 Example of auxiliary circuit when VDC is used.

The example above can be used when a high VDC signal output is required.

10 Troubleshooting

Ensure that the installation has been correctly carried out, e.g. check the terminals and that the cables are properly stripped. The monitor is maintenance-free. However, you should regularly check wirings and terminals etc.

Problem	Solution
Window 01 always shows zero load, even if the motor is running	- Check the connection of the current transformer(s). - Check that the value of the rated motor power in window 41 is the same as the rated motor power on the motor plate. - Check that window 03 shows a phase current value that agrees with with the rated motor current.
Window 01 shows an improper power value when the motor is running	- Check that the motor is not oversized for its application, check power transmission and gear ratio. - Check that there is a load on the motor during normal operation. - Check that the change in motor load is greater than about 3% (window 01). - Check that the current transformer is connected in phase L1.
Window 03 shows an improper value for the phase current	- Check that the current transformer has been selected as per Tables 1 and 2. - Check that the number of windings is as per Tables 1 and 2. - Check that the value of the motor current in window 42 is the same as the value of the motor current on the motor plate.
The monitor never gives an alarm	- Check that window 01 shows a value greater than zero. - Check the alarm levels in windows 11 to 14. If incorrect readjust the levels or perform an Auto set.

Problem	Solution
The monitor always gives an alarm	- Check the alarm levels in windows 11 to 14. If incorrect readjust the levels or perform an Auto set. - Check if the monitor is programmed for “latched alarm” (window 61=on). If so reset the monitor by pressing the reset key.
Window 00 shows “LU” or “OU”. Under- or over-voltage alarm.	Switch off the supply: - Check that the supply voltage agrees with the voltage range on the monitor type plate.
Window 01 shows “oor”. “Out Of Range” alarm.	- The measured shaft power is higher than 125% of the rated motor power programmed in window 41.
Window 03 shows “oor”. “Out Of Range” alarm.	- The measured motor current is higher than 125% of the rated motor current programmed in window 42.
Over and undervoltage is not detected	This is only detected at monitor power up and not during continued operation. The relays will not trip, only indication in the display.
The alarm relays are not switching	- Check that the wire links between terminals 6 and 7 are removed as per “Wiring”.
Not all windows are shown	When the special functions are used (windows 35, 65 etc.) blocked windows for settings are not shown.

11 Technical Data

Dimensions (WxHxD)	45x90x115 mm (1.77" x 3.54" x 4.53") 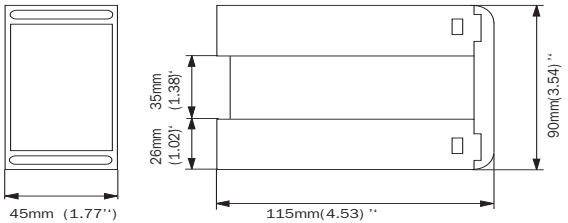
Mounting	35 mm DIN rail 46277
Weight	0.30 kg (10.5 oz)
Supply voltage (±10%)	1x100-240 VAC, 3x100-240 VAC, 3x380-500 VAC or 3x525-690 VAC
Frequency	50 or 60 Hz
Current input	Current transformer; CTM 010, 025, 050 and 100. Input 0-55 mA. (>100 A extra transformer needed)
Power consumption	Max. 6 VA
Start-up delay	1-999 s
Hysteresis	0-50% of rated motor power
Response delay max	0.1-500 s
Response delay min	0.1-500 s
Relay output	5 A/240 VAC Resistive, 1.5 A/240 VAC Pilot duty/AC12
Analogue output	Max. load 500 ohm
Digital input	Max. 240 VAC or 48 VDC. High: ≥24 VAC/DC, Low: <1 VAC/DC. Reset >50 ms
Fuse	Max. 10 A
Terminal wire size	Use 75°C copper (CU) wire only. 0.2-4.0 mm^2 single core (AWG12). 0.2-2.5 mm^2 flexible core (AWG14), stripped length 8 mm (0.32")

Terminal tightening torque	0.56-0.79 Nm (5-7 lb-in)
Accuracy	±2%, ±1 unit cos phi>0.5; excl. current transformer; +20°C (+68°F)
Repeatability	±1 unit 24h; +20°C (+68°F)
Temperature tolerance	max 0.1%/°C
Operating temperature	-20 to +50°C (-4°F to +122°F)
Storage temperature	-30 to +80°C (-22°F to +176°F)
Protection class	IP20
RoHS directive	2002/95/EC
Approved to	CE (up to 690VAC), UL and cUL (up to 600 VAC)

Article number	Designation
01-2520-25	Emotron M20 1x100-240/3x100-240 VAC
01-2520-45	Emotron M20 3x380-500 VAC
01-2520-55	Emotron M20 3x525-690 VAC

Technical Data for Current Transformer (CT)

Type	Dimensions (WxØ)	Weight*	Mounting
CTM 010	27 (35) x Ø48 mm	0.20 kg	35mm DIN rail 46277
CTM 025	27 (35) x Ø48 mm	0.20 kg	35mm DIN rail 46277
CTM 050	27 (35) x Ø48 mm	0.20 kg	35mm DIN rail 46277
CTM 100	45 (58) x Ø78 mm	0.50 kg	35mm DIN rail 46277

* Weight including 1m (39 inch) cable. Please note that max. length of the CTM cable is 1 m and this cable cannot be extended.

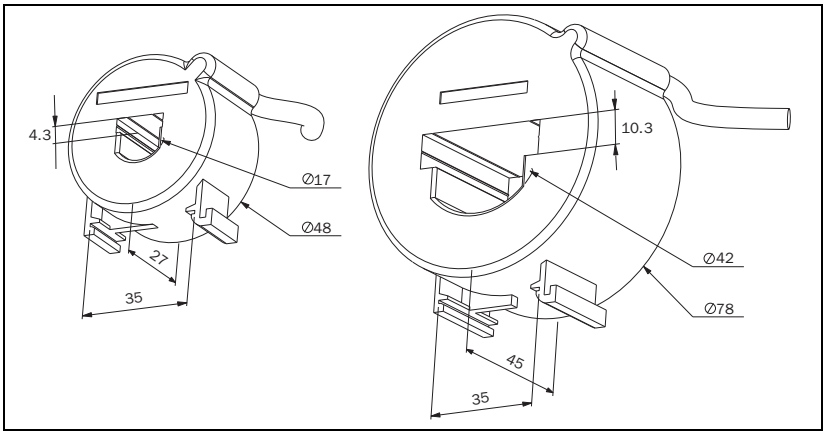

Fig. 17 Current Transformer CTM xxx.

Accessories and documentation

Article number	Designation
01-2471-10	Current Transformer (CT) CTM010, max. 10 A
01-2471-20	Current Transformer (CT) CTM025, max. 25 A
01-2471-30	Current Transformer (CT) CTM050, max. 50 A
01-2471-40	Current Transformer (CT) CTM100, max. 100 A
01-2368-00	Front Panel Kit 1 (2x terminal covers included)
01-4136-01	2x Terminal covers
01-5958-00	Instruction manual (Swedish)
01-5958-01	Instruction manual (English)
01-5958-02	Instruction manual (German)
01-5958-03	Instruction manual (Dutch)
01-5958-04	Instruction manual (Spanish)
01-5958-08	Instruction manual (French)
01-5958-09	Instruction manual (Russian)

Dismantling and disposal

The product is designed to comply with the RoHS directive, and shall be handled and recycled in accordance with local legislations.

EU (European Union) specifications

EMC	EN 61000-6-3, EN 61000-6-2 EN 61000-4-5
Electrical safety	EN 60947-5-1
Rated insulated voltage	690 V
Rated impulse withstand voltage	4000 V
Pollution degree	2

Terminals 3, 4, 5, 6, 7 and 8 are basic insulated from the line.
Terminals 3 and 4 are basic insulated from terminals 5, 6, 7 and 8.

US specifications

FCC (Federal Communications Commission). This equipment has been tested and found to comply with the limits for a Class A digital device pursuant to Part 15 of the FCC Rules. These limits are designed to provide reasonable protection against harmful interference when the equipment is operated in a commercial environment. This equipment generates, uses and can radiate radio frequency energy and, if not installed and used in accordance with the instruction manual, may cause harmful interference, in which case the user will be required to correct the interference at their own expense.

Canadian specifications

DOC (Department of Communications). This digital apparatus does not exceed the Class A limits for radio noise emissions from digital apparatus as set out in the Canadian Interference-Causing Equipment Regulations. Le présent appareil numérique n'ément pas de bruits radio-électriques dépassant les limites applicables aux appareils numériques de la Classe A prestite dans le Régelement sur le brouillage radioélectrique édicté du Canada.

12 Parameter List

Window	Function	Range	Default	Custom	Symbol
00	Alarm indication				
01	Measured shaft power in % of rated power	0-125			%
	Measured shaft power in kW	0-745			kW
	Measured shaft power in % of rated power	0-125			%
	Measured shaft power in HP	0-999			
02	Measured line voltage	90-760 V			V
03	Measured current	0.00-999 A			A
04	Parameter lock	0-999			
05	Monitor function	OVER- and UNDERLOAD, OVERLOAD, UNDERLOAD	OVERLOAD and UNDER-LOAD		
11	MAX Main Alarm (relay R1)	0-125	100		%
		0-745	2.2		kW
		0-125	100		%
		0-999	3		
12	MAX Pre-Alarm (relay R2)	0-125	100		%
		0-745	2.2		kW
		0-125	100		%
		0-999	3		

Window	Function	Range	Default	Custom	Symbol
13	MIN Pre-Alarm (relay R2)	0-125	0		%
		0-745	0		kW
		0-125	0		%
		0-999	0		
14	MIN Main Alarm (relay R1)	0-125	0		%
		0-745	0		kW
		0-125	0		%
		0-999	0		
21	MAX Main Alarm margin	0-100	16		%
22	MAX Pre-Alarm margin	0-100	8		%
23	MIN Pre-Alarm margin	0-100	8		%
24	MIN Main Alarm margin	0-100	16		%
31	Start delay	1-999	2		s
32	Response delay over-load	0.1-500	0.5		s
33	Hysteresis	0-50	0		%
34	Response delay underload	0.1-500s	0.5		s
35*	Pause/Reverse time	3-511	5		s
36*	Autoreset (start attempts)	0-5	0		
41	Rated motor power	0.10-745	2.2		kW
		0.13-999	3		
42	Rated current	0.01-999	5.6		A
43	Number of phases	1PH/3PH	3PH		
61	Main alarm latch	on/OFF	OFF		

Window	Function	Range	Default	Custom	Symbol
62	Alarm at no motor current	on/OFF	OFF		
63	Main Alarm relay R1	nc/no	nc		
64	Pre-Alarm relay R2	nc/no	no		
65*	Relay function	0 = M20 1 = DLM 2 = Reverse	0		
81	Digital input	rES/AU/bLo	rES		
82	Block timer	0.0-90	0.0		s
91	Analogue output	0.20/4.20/ 20.0/20.4	0.20		
92**	Analogue output low value	0-100			
93**	Analogue output high value	0-125			
99	Factory defaults	dEF/USr	dEF		

* See Special functions in chapter 9.

** See Set analogue output range in chapter 9.

13 Service

This manual is valid for the following model:

Emotron M20 (from software version R3b)

Document number:	01-5958-01
Document version:	r0
Date of release:	2012-04-02

CG Drives & Automation Sweden AB reserves the right to alter product specifications without prior notification. No part of this document may be reproduced without permission from CG Drives & Automation Sweden AB.

For more information contact your local sales outlet or visit us at:
www.emotron.com / www.cgglobal.com

Protected by utility patents EP 1027759 and US 6879260

CG Drives & Automation Sweden AB
Mörsaregatan 12
Box 222 25
SE-250 24 Helsingborg
Sweden
T +46 42 16 99 00
F +46 42 16 99 49
www.cgglobal.com / www.emotron.com

CG Drives & Automation, 01-5958-01r0, 20123-04-02