Brass and stainless steel rotary vane pumps CO/MO 50-200 series

Find out more

The Compact and Compact Plus series rotary vane pumps are the smallest series of the Rotoflow® line of positive displacement pumps. Capable of high performances despite the small size, the Compact and Compact Plus series is the choice when space is an issue.

Technical features and manufacturing characteristics

The Compact series housing is brass made only, while the Compact Plus series, equipped with ball bearings supporting the rotor, is available in brass or stainless steel AISI 303.
Both are assembled with a stainless steel AISI 303 rotor, carbon graphite pumping chamber and NBR seals. The inlet and outlet ports are 3/8" GAS or NPT threaded. The pumps can be connected to direct coupling motors with a stainless steel clamp.
Maximum operative temperature: 70 °C (158 F).

Available upon request:
- Viton®/EPDM seals
- Built-in relief valve



MAIN APPLICATIONS

- Espresso coffee machines
- Beverage vending machines
- Post mix drink dispensers
- Water treatment
- Water dispenser
- Cooling systems

TECHNICAL INFORMATION

Pump housing material	Brass or stainless steel	Max static pressure	20 bar/290 psi
Pumping chamber	Carbon graphite	Pump weight	CO 850 g (1.9 lb)
Ports	3/8" GAS or NPT		MO 1 Kg (2.2 lb)
Speed limit	1725 rpm		

COMPACT PLUS

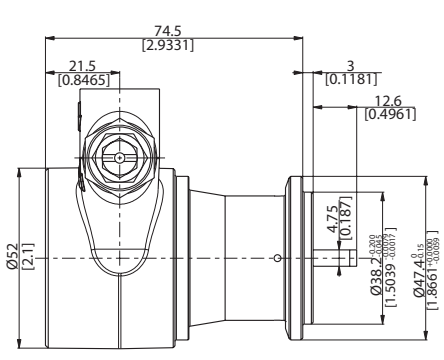

COMPACT

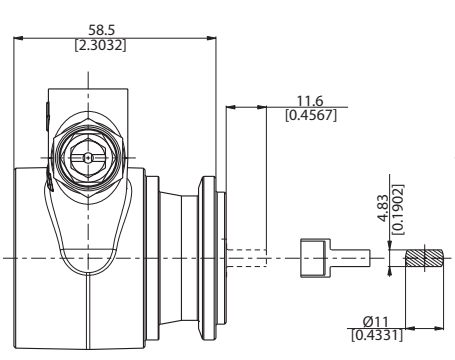

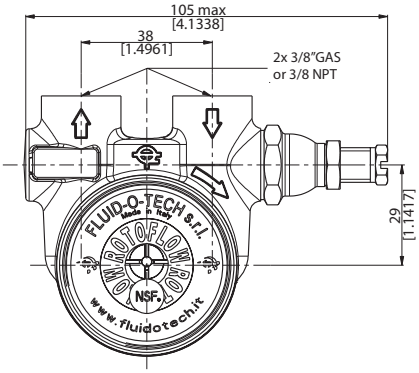

Dimensions in mm [inches]

Model CO/CA/CW (Compact)	050 051 054	070 071 074	100 101 104	150 151 154	200 201 204
Figure	A-A (50 Hz); A'-A' (60 Hz)	B-B (50 Hz); B'-B' (60 Hz)	C-C (50 Hz); C'-C' (60 Hz)	D-D (50 Hz); D'-D' (60 Hz)	E-E (50 Hz); E'-E' (60 Hz)
Relief valve	NO STD BAL	NO STD BAL	NO STD BAL	NO STD BAL	NO STD BAL

Model MO/MA/MW (Compact Plus)	050 051 054	070 071 074	100 101 104	150 151 154	200 201 204
Figure	A-A (50 Hz); A'-A' (60 Hz)	B-B (50 Hz); B'-B' (60 Hz)	C-C (50 Hz); C'-C' (60 Hz)	D-D (50 Hz); D'-D' (60 Hz)	E-E (50 Hz); E'-E' (60 Hz)
Relief valve	NO STD BAL	NO STD BAL	NO STD BAL	NO STD BAL	NO STD BAL

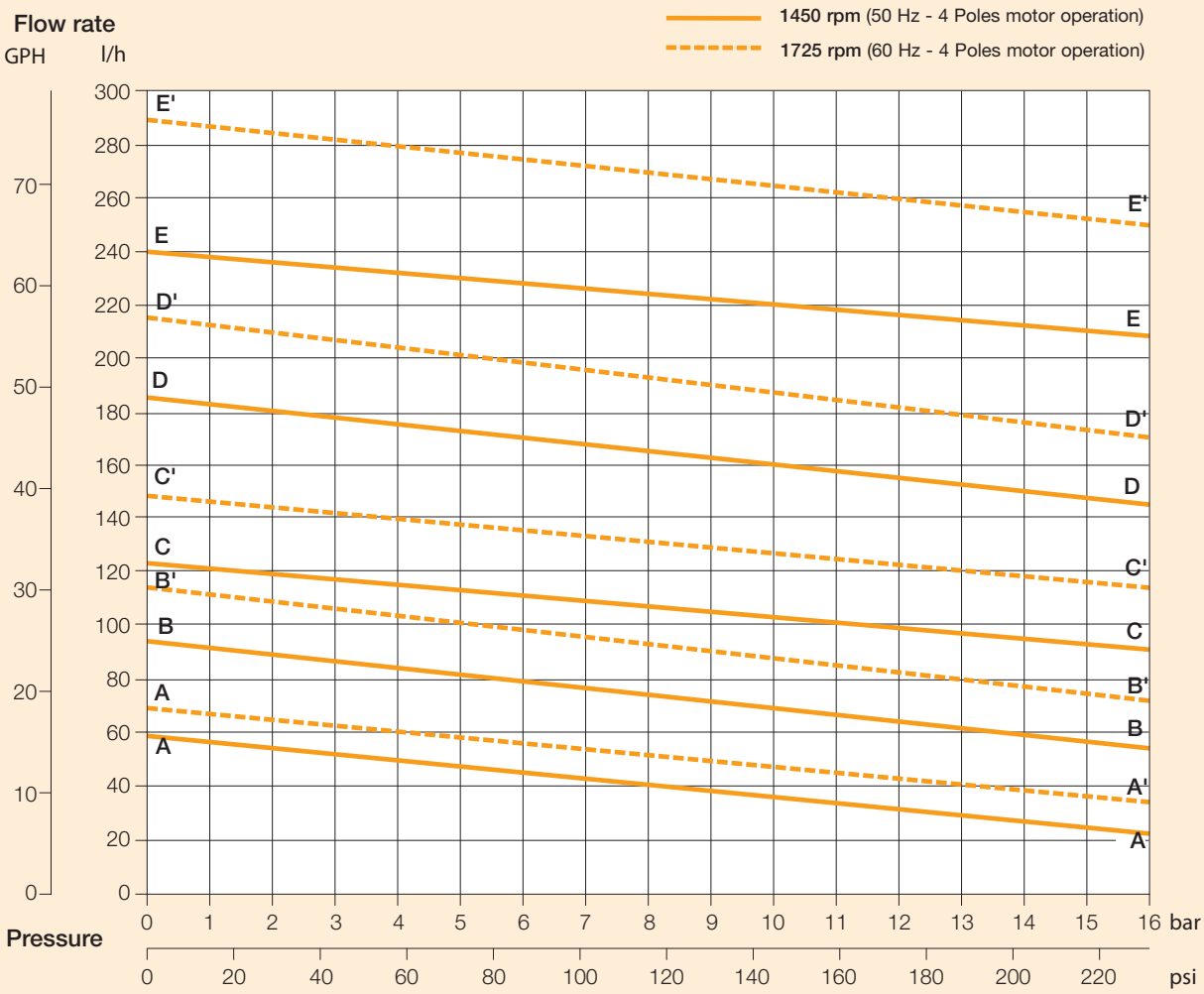

Note: Characteristics at constant motor speed, water at 20 °C (68 F) and relief valve closed. When coupling the pump to the motor the min. starting torque should be no less than 0.5 Nm.
For applications involving other fluids, high temperatures or unusual processing conditions, please consult the factory or an authorized Fluid-o-Tech distributor.

Fluid-o-Tech reserves the right to alter the specifications indicated in this catalogue at any time and without prior notice.

Fluid-o-Tech srl
Via Leonardo da Vinci, 40
20094 Corsico, Milano, Italy
Tel. +39 02 9995 01
Fax +39 02 9995 0999
info@fluidotech.it

Fluid-o-Tech Int'l Inc.
161 Atwater St.,
06479 Plantsville CT (USA)
Tel. +1 (860) 276 9270
Fax +1 (860) 620 0193
info@fluid-o-tech.com

Fluid-o-Tech Int'l Inc. Japan
203, 2-17-19, Ebara, Shinagawa
Tokyo 142-0063, Japan
Tel. +81 (0) (3) 3783 9660
Fax +81 (0) (3) 3783 9661
k.kato@fluidotech.com

Fluid-o-Tech Asia (Beijing) Co., Ltd
Jingwei Industrial Zone,
Beifang Huairou, Beijing, 101400, PRC
Tel. +86 (0) (10) 6168 4650
Fax +86 (0) (10) 6168 4651
info@fluidotech-asia.com