CALL TOLL FREE 877-742-2878 FOR SALES AND SUPPORT

Return to Burtprocess.com

MASTERFLEX®

ISMATEC®

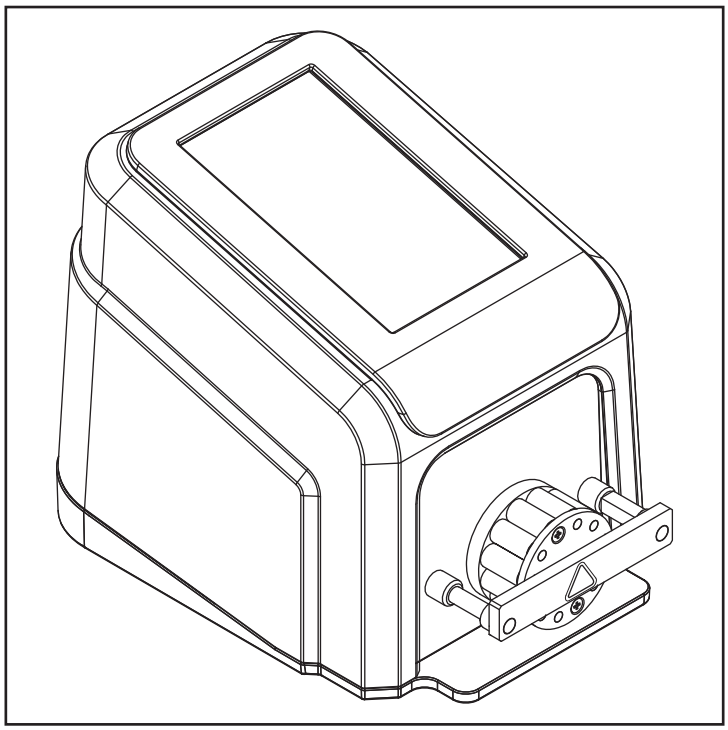

*MASTERFLEX® REGLO MFLX78018-10*

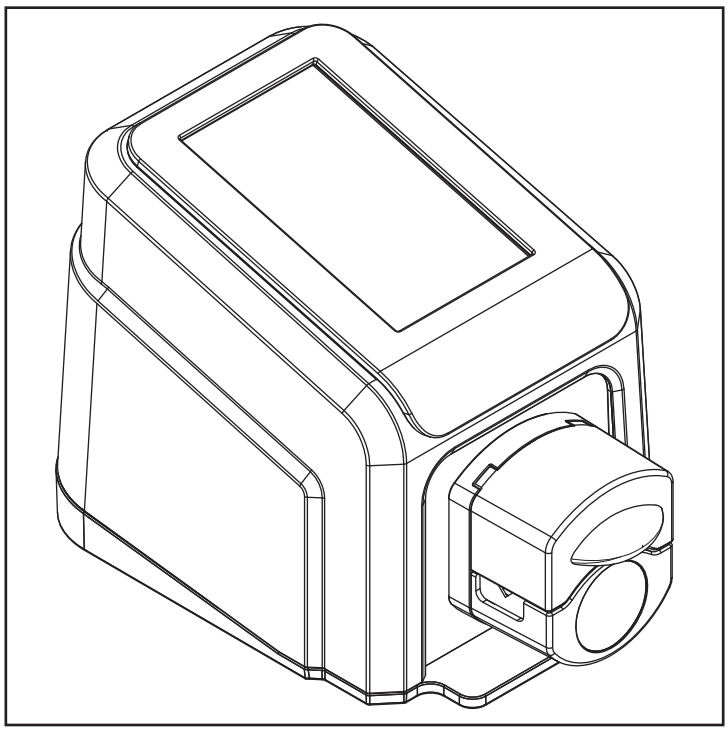

*MASTERFLEX® REGLO MFLX78018-40*

OPERATING MANUAL:

# REGLO DIGITAL PUMP DRIVES WITH ADVANCED CONNECTIVITY

Model Nos.

**MFLX78018-10**
**MFLX78018-12**
**MFLX78018-14**
**MFLX78018-20**
**MFLX78018-22**
**MFLX78018-24**
**MFLX78018-40**
**MFLX78018-42**

A-1299-5201
Edition 04

MASTERFLEX®

(US & Canada only) Toll Free 1-800-MASTERFLEX • 1-800-637-3739
(Outside US & Canada) 1-847-381-7050
masterflex.tech @ avantorsciences.com|www.avantorsciences.com/masterflex

© 2023 Masterflex LLC. All rights reserved.
**Masterflex**® is a registered trademark of the MasterflexLL C.
Trademarks bearing the ® symbol in this publication are registered in the US and in other countries.

# PUMP FOR LIQUIDS
# ORIGINAL INSTRUCTIONS

# Table of Contents

SECTION 1: INTRODUCTION 1-1
- Safe Operation 1-1
- About the REGLO 1-2
  - Package Contents 1-2
  - Peristaltic Cassette Models 1-2
  - Peristaltic Miniflex Models 2-1
  - Non-Peristaltic Pump Models 2-1
  - Available Models 2-1

SECTION 2: BASIC SETUP & SETTINGS 2-2
- Touchscreen Icons 3-1
- Before Starting the Drive 3-2
- Switching on the Drive 3-2
- Settings 3-3
  - Language Settings 3-3
  - Setting the Time 3-3
  - Setting the Date 3-4
  - Display Brightness 3-4
  - Dispense Completion Alerts 3-4
  - Batch Completion Alerts 3-4
  - Analog Output 3-4
  - Device Information 3-5
  - Screen Saver 3-5
  - Device Name 3-5
  - WI-FI Settings 3-6
  - Ethernet Settings 3-6
  - User Management 3-7
  - Auto Start 3-8
- Loading Tubing 3-9
  - Cassette Models 3-9
  - Miniflex Models 3-11
- Priming the Pump Drive 3-13
- Tube Calibration 3-14
  - Tube Calibration Screen 3-14

SECTION 3: OPERATION 3-16
- Mode Selection Screen 3-16
- Continuous Mode 3-17
  - Continuous Mode Run Screen 3-17
  - Continuous Mode Operation 3-18
  - Saving Continuous Mode Settings as a New Program 3-19
- Time Mode 3-20

Time Mode Run Screen 3-20
Time Mode Edit Screen 3-21
Time Mode Operation 3-21
Saving Time Mode Settings as a New Program 3-23
Volume Mode 3-24
Volume Mode Run Screen 3-24
Volume Mode Edit Screen 3-25
Volume Dispense Mode Operation 3-25
Saving Volume Mode Settings as a New Program 3-27
Anti-Drip 3-27
Volume Record 3-28
Analog Input Mode 3-29
Analog Input Mode Run Screen 3-29
Analog Input 3-30
Saving Analog Input Mode Settings as a New Program 3-31
MasterflexLive™ 3-32
Custom Program Modes 3-32
Adding a New Program: Continuous Mode 3-32
Adding a New Program: Time Mode 3-32
Adding a New Program: Volume Mode 3-34
Adding a New Program: Analog Input Mode 3-35
Using Program Modes 3-36
Editing a Program 3-36
Deleting a Program 3-37

SECTION 4: COMMUNICATION SPECIFICATION 4-1
Ethernet I/P Mode 4-1
Ethernet/IP Setup 4-1
Masterflex Ethernet/IP 4-4

SECTION 5: SERVICE & MAINTENANCE 5-1
Firmware Updates 5-1
Restore Factory Settings 5-1
Cleaning the Pump Drive 5-2
Accessories 5-2
REGLO Accessories 5-2
Cassettes 5-2
Color-Coded Three-Stop Tubing 5-3
Miniflex Pump Head Replacement 5-4
DB-25 Electrical Connections 5-5
Troubleshooting 5-6
Error Definitions 5-7
Specifications 5-8
Technical Assistance 5-10

Product Return ..... 5-10
Warranty ..... 5-10
Disposal ..... 5-10

# SECTION 1: INTRODUCTION

## SAFE OPERATION

The REGLO Digital Pump Drive with Advanced Connectivity is designed for pumping and dispensing applications in laboratory and process environments. Confirm that the pump drive is operated only in the manner specified in this operating manual and that safe work practices and Good Laboratory Practice (GLP) are followed. Misuse of the pump drive may compromise built-in safety protections and result in injury and/or damage to equipment. Do not operate the pump drive with water on the surface of the touchscreen.

**The following Safety Symbols are used in this documentation:**

| | |
|---|---|
|  | **CAUTION:** Risk of Danger. Consult Operating Manual for nature of hazard and corrective actions. |
|  | **CAUTION:** Risk of crushing. Keep fingers away from the rotor while the pump is in operation. Stop pump before loading or unloading tubing. |
|  | **CAUTION:** Hot Surface. Do not touch. |
|  | **CAUTION:** Risk of electric shock. Consult Operating Manual for nature of hazard and corrective actions. |

**Please observe the following cautions and recommendations:**

| | |
|---|---|
|  | **CAUTION**: Do not operate the pump in a way that exceeds the designed operating and environmental conditions outlined in this operating manual. |
|  | **CAUTION**: The pump must not be used:<br>• As a medical device.<br>• In explosion proof chambers or in the presence of flammable gases or fumes. |
|  | **CAUTION**: The circuit between the mains power supply and the pump must be connected to earth ground. |
|  | **CAUTION**: Turn the drive off before removing or installing tubing. Fingers or loose clothing could get caught in the drive mechanism. |
|  | **CAUTION**: Do not open or remove the housing while the pump is operating. |
|  | **CAUTION**: Tubing can tear and burst during operation. It is the responsibility of the customer to take the necessary precautions to avoid injury or damage to equipment. |
|  | **CAUTION**: It is recommended that any repairs be performed only by an authorized technician. If service and repairs are performed by the customer or by any third party company, Masterflex denies all responsibility. |

# ABOUT THE REGLO

The REGLO Digital Pump Drive with Advanced Connectivity offers precise flow control and highly accurate fluid dispensing ideal for laboratory, process, and field use. All REGLO precision drives include a highly accurate, maintenance-free motor and an easy to navigate touchscreen that makes setup and operation easier than ever. The REGLO range features Ethernet and Wi-Fi connections for web-based monitoring using the MasterflexLive™ website (see www.masterflex.com), and remote analog input control and monitoring through the pump drive's DB-25 female connection port.

## Package Contents

**NOTE:** Please check the package and its contents for any visible signs of damage. If any damage is found please contact Technical Assistance immediately (see "Technical Assistance" on page 5-10).

- Pump Drive
- 24 VDC Desktop Power Supply Set
- Quick Start Guide
- Flash Drive Containing the Operating Manual

## Peristaltic Cassette Models

**Features:**

- A 5-inch multi-language touchscreen display providing easy access to user-defined operation parameters and direct readouts of pump operation data, including pump speed, flow rates, flow direction, and batch totals.
- Volume, Time, Continuous, and Analog Input modes for quick and easy operation.
- User selectable dispense volumes, tube diameters, flow rates, pump speeds, and run times.
- Anti-drip control.
- Easy user management with three levels of access: ADMIN, SUPER USER and USER.
- Wi-Fi and Ethernet connectivity.
- Brushless, maintenance-free motor offering ±0.1% speed control accuracy with a turndown ratio greater than 1500:1.
- Easy pump priming and tube calibration.
- Peristaltic Cassette models have a maximum speed of 160 RPM and flow rate capacities that range from 0.001 mL/min through to 68 mL/min (depending on the model and tubing size selected).
- Takes MS/CA Click'n'go tube cassettes for easy loading and removal.
- Can take up to two channels or up to four channels (depending on the model) allowing simultaneous multiple fluid channels on the same pump.

## Peristaltic Miniflex Models

The REGLO is available in two non-cassette pump head models (78018-40 and 78018-42). The REGLO Miniflex Digital Pump Drives feature:

- An easy to load pump head that accepts continuous lengths of tubing for clean flow paths.
- Automatic tubing retention that makes tube loading quick and easy.
- Tool free tube replacement.
- Available with one or two tube channels.
- A maximum speed of 350 RPM and flow rate capacities ranging from 0.006 mL/min to 324 mL/min (depending on the model and tubing size selected).

Go to www.masterflex.com for further information.

## Non-Peristaltic Pump Models

The REGLO is also available in a Gear Pump model (78018-50) and a Piston Pump model (78018-60). Go to www.masterflex.com for further information.

## Available Models

| Model | Description | Pump Type | RPM (MAX) | Channels | Rollers | Cartridge/Heads |
|---|---|---|---|---|---|---|
| 78018-10 | 2CH6RLR | Peristaltic | 160 | 2 | 6 | Click'n'go |
| 78018-12 | 2CH8RLR | Peristaltic | 160 | 2 | 8 | Click'n'go |
| 78018-14 | 2CH12RLR | Peristaltic | 160 | 2 | 12 | Click'n'go |
| 78018-20 | 4CH6RLR | Peristaltic | 160 | 4 | 6 | Click'n'go |
| 78018-22 | 4CH8RLR | Peristaltic | 160 | 4 | 8 | Click'n'go |
| 78018-24 | 4CH12RLR | Peristaltic | 160 | 4 | 12 | Click'n'go |
| 78018-40 | Miniflex | Peristaltic | 350 | 1 | 3 | Miniflex Pump (Single Channel) |
| 78018-42 | Miniflex | Peristaltic | 350 | 2 | 3 | Miniflex Pump (Dual Channel) |
| 78018-50 | Gear Pump | Gear | 5000 | 1 | - | A-mount Gear Pump |
| 78018-60 | Piston Pump | Piston | 1800 | 1 | - | Piston Head |

# SECTION 2: BASIC SETUP & SETTINGS

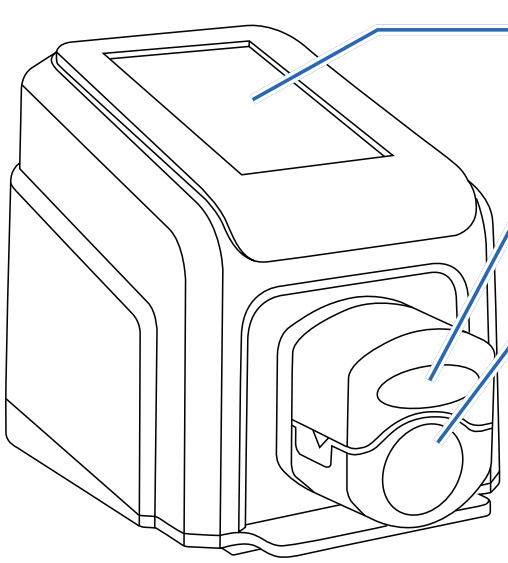


**Miniflex Models**

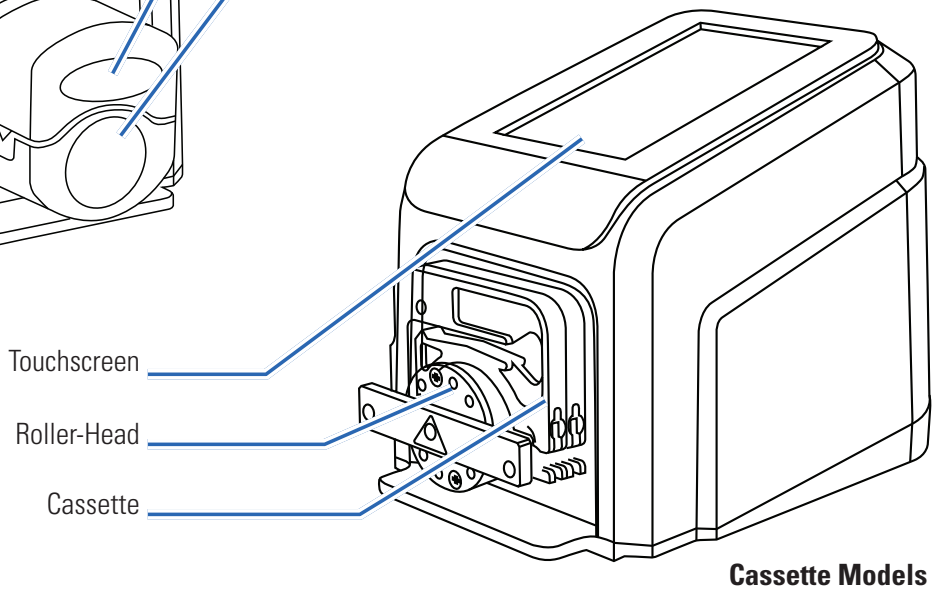


**Cassette Models**

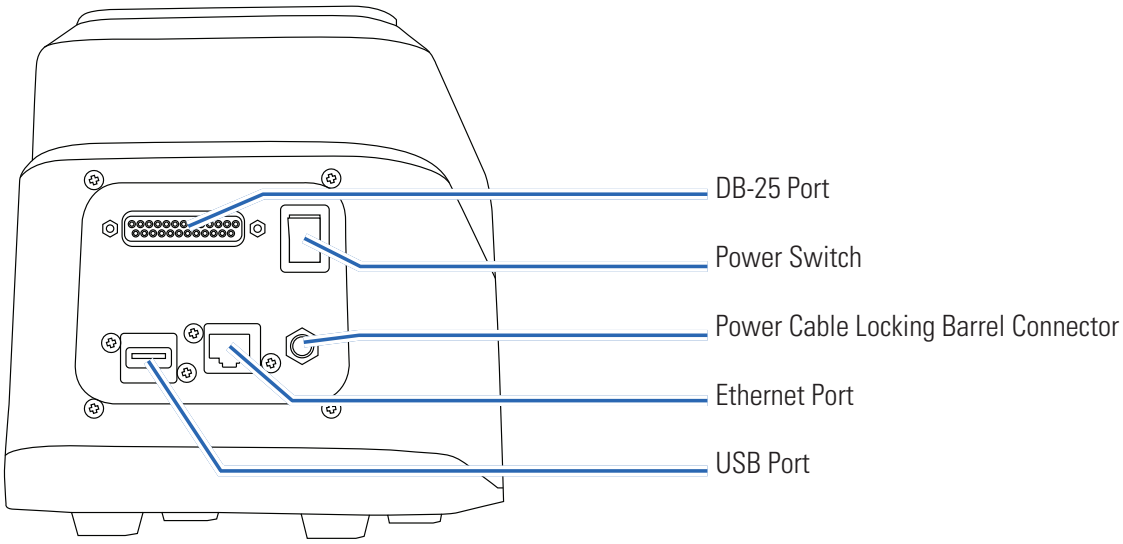

# TOUCHSCREEN ICONS

| | | | |
|---|---|---|---|
|  | Analog Input Mode |  | New User |
|  | Calibrate |  | Pause |
|  | Calibration Complete |  | Prime |
|  | Clockwise |  | Program |
|  | Close/Cancel |  | Ramp Down |
|  | Confirm |  | Ramp Up |
|  | Connectivity Status |  | Record Volume |
|  | Continuous Mode |  | Reset |
|  | Counterclockwise |  | Screen Lock |
|  | Delete |  | Settings |
|  | Display Brightness |  | Start |
|  | Edit |  | Stop |
|  | Language |  | Time Mode |
|  | Logout |  | Update Available |
|  | New Program |  | Volume Mode |

# BEFORE STARTING THE DRIVE

| | |
|---|---|
|  | **CAUTION**: Do not block the rear panel of the pump drive. The power switch must always be easy to access and the power cord must always be easy to disconnect. |
|  | **CAUTION**: Turn the drive off before removing or installing tubing. Fingers or loose clothing could get caught in the drive mechanism. |
|  | **CAUTION**: The power cord set supplied with your pump drive meets the requirements of the country where you purchased the pump drive. If you use the pump drive in another country, you must use a power cord set that meets the requirements of that country. |
|  | **CAUTION:** To avoid electrical shock, the power cord protective grounding conductor must be connected to ground. Not for operation in wet locations as defined by EN61010-1. |

- Ensure the pump drive is mounted on a flat surface.
- Ensure adequate air flow around the pump drive and ensure that the ambient air temperature does not exceed 104° F (40° C).
- Tubing should be clean and routed so that bend radii are at a minimum of four (4) times the outside tube diameter and are as short as possible.
- Use the appropriate tube diameter for the required flow rate and viscosity.
- Recalibrate tubing regularly to maintain the best flow rate accuracy (for further information see "Tube Calibration" on page 3-14).
- For tubing selection and compatibility go to www.masterflex.com.
- Unplug the pump drive's power cable from the mains power outlet when cleaning or performing maintenance on the drive.

# SWITCHING ON THE DRIVE

1. Plug in and securely fasten the supplied 24 VDC desktop power supply to the power cable barrel connector located at the rear of the drive.
2. Plug the opposite end of the power cable into a mains power outlet.
3. Switch the drive on using the power switch located at the rear of the drive. **NOTE:** The drive takes approximately two minutes to complete start-up.

**NOTE:**

- On the initial start-up the Language Settings Screen will be displayed. A language must be selected before pump operation (for further information see "Language Settings" on page 3-3).
- If User Management is enabled you may be prompted for a username and password (for further information see "User Management" on page 3-7 ).
- Following the initial start-up all subsequent start-ups will revert to the mode of operation screen previously in use.
- After 30 minutes of inactivity the REGLO will enter sleep mode and the display will turn off. Tapping the touchscreen will reactivate the drive. To enable (default) or disable the screen saver see "Screen Saver" on page 3-5.

# SETTINGS

The Settings Screen allows access to basic configuration settings. The Settings Screen is accessed by tapping SETTINGS from any of the mode screens. **NOTE:** If User Management is enabled only users with authorization can access the Settings Screen (for further information see "User Management" on page 3-7).

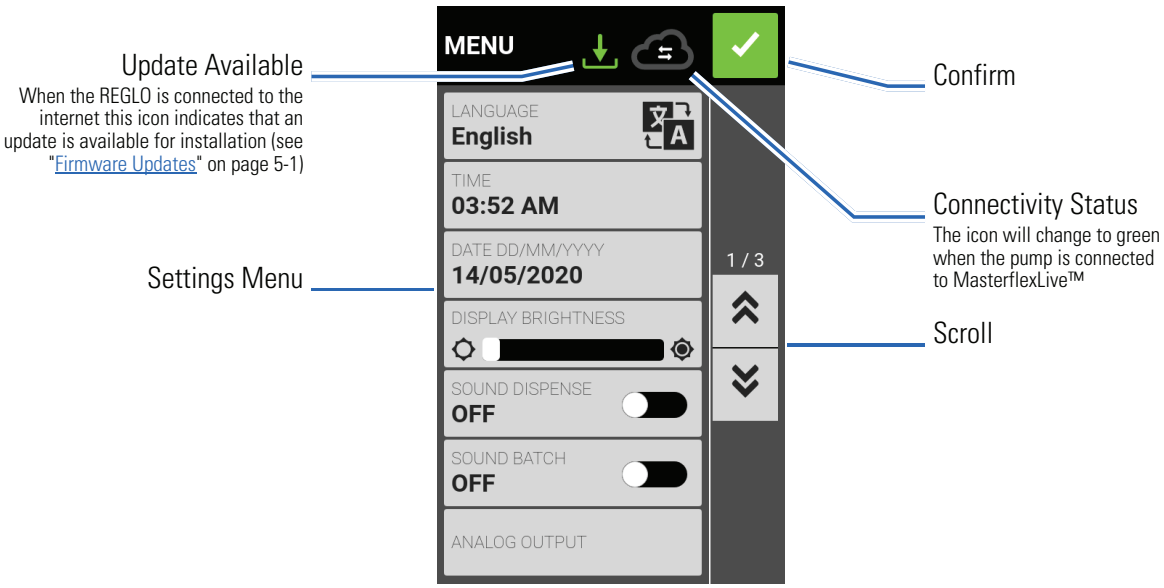


## Language Settings

The REGLO Digital Pump Drive can display Chinese, English, French, German, Italian, Japanese, and Spanish languages. The default display language is English.

**To change the display language:**

1. Tap SETTINGS from any of the mode screens. The Settings Screen will be displayed.
2. Tap LANGUAGE.
3. Select the desired language from the available list.
4. Tap CONFIRM to save the new language selection.

## Setting the Time

**To change the time:**

1. Tap SETTINGS from any of the mode screens. The Settings Screen will be displayed.
2. Tap TIME.
3. Select either 12-HOUR or 24-HOUR time.
4. Tap HH to select hours and enter the desired time using the onscreen keypad.
5. Tap MM to select minutes and enter the desired time using the onscreen keypad.
6. If using 12-HOUR time, tap AM/PM to select either AM or PM.
7. Tap CONFIRM to save or CANCEL to discard changes.

## Setting the Date

**To change the date:**

1. Tap SETTINGS from any of the mode screens. The Settings Screen will be displayed.
2. Tap DATE.
3. Select the desired date format (either month/day/year or day/month/year).
4. Tap the desired MONTH, DAY or YEAR field to select and then enter the date using the onscreen keypad.
5. Tap CONFIRM to save or CANCEL to discard changes.

## Display Brightness

**To adjust the display brightness:**

1. Tap SETTINGS from any of the mode screens. The Settings Screen will be displayed.
2. Use the DISPLAY BRIGHTNESS slider to adjust the touchscreen brightness to the desired level.

## Dispense Completion Alerts

When Sound Dispense is enabled a short beep will sound at the completion of each pump dispense.

**To enable or disable the dispense completion alert:**

1. Tap SETTINGS from any of the mode screens. The Settings Screen will be displayed.
2. Tap the SOUND DISPENSE toggle to select either ON or OFF.

## Batch Completion Alerts

When Sound Batch is enabled a single long beep will sound at the completion of each batch cycle.

**To enable or disable the batch cycle completion alert:**

1. Tap SETTINGS from any of the mode screens. The Settings Screen will be displayed.
2. Tap the SOUND BATCH toggle to select either ON or OFF.

## Analog Output

The REGLO supports and controls analog output through the pump drive's 25-pin connection (for further information see "DB-25 Electrical Connections" on page <OV>.

1. Tap SETTINGS from any of the mode screens. The Settings Screen will be displayed.
2. Tap ANALOG OUTPUT. The Analog Output Screen will be displayed.
3. Tap to select the desired analog output type from the available list.
4. If using either ANALOG: VOLTAGE or ANALOG: CURRENT:
   a. Tap EDIT . The Analog: Voltage Edit Screen or Analog: Current Edit Screen will be displayed.
   b. Select the desired current or voltage operating range from the available list.
   c. Tap CONFIRM to save or CANCEL to discard changes. The Analog Output Screen will be displayed.
5. Tap CONFIRM .

## Device Information

The Device Information Screen provides pump drive details such as MAC address, IP address, software version, build date, and firmware version. Factory reset and updates are also accessed from the Device Information Screen.

**To access the Device Information Screen:**

1. Tap SETTINGS from any of the mode screens. The Settings Screen will be displayed.
2. SCROLL ⌄⌄ through the Settings Screen pages to locate DEVICE INFORMATION.
3. Tap DEVICE INFORMATION. The Device Information Screen will be displayed.

See also "Firmware Updates" on page 5-1, and "Restore Factory Settings" on page 5-1.

## Screen Saver

The REGLO has a screen saver to help extend the display life of the touchscreen. After 30 minutes of inactivity the REGLO will enter sleep mode and the display will turn off. Tapping the touchscreen will reactivate the drive.

**To enable or disable the screen saver:**

1. Tap SETTINGS from any of the mode screens. The Settings Screen will be displayed.
2. SCROLL ⌄⌄ through the Settings Screen pages to locate SCREEN SAVER.
3. Tap the SCREEN SAVER toggle to select either ON or OFF.

## Device Name

Individual names can be assigned to each REGLO Digital Pump Drive to make identification easier when using more than one pump.

**To assign a pump drive name:**

1. Tap SETTINGS from any of the mode screens. The Settings Screen will be displayed.
2. SCROLL ⌄⌄ through the Settings Screen pages to locate DEVICE NAME.
3. Tap DEVICE NAME. The Device Name Screen will be displayed.
4. Enter the desired pump name using the onscreen keypad (up to 8 characters).
5. Tap CONFIRM ✓ to save or CANCEL ✕ to discard changes.

## WI-FI Settings

The REGLO can connect to a network using Wi-Fi and Ethernet connections.

**NOTE:**

- The Ethernet connection will take priority if both Wi-Fi and Ethernet are used simultaneously.
- The REGLO supports WEP, WPA, WPA2, and None (open) Wi-Fi security protocols.

**To select a Wi-Fi network:**

1. Tap SETTINGS from any of the mode screens. The Settings Screen will be displayed.
2. SCROLL through the Settings Screen pages to locate WIFI SETTINGS.
3. Tap WIFI SETTINGS. The Wi-Fi Settings Screen will be displayed.
4. If required, tap the WIFI toggle to select either ON or OFF.
5. Tap the desired Wi-Fi network from the available list.
6. If required, enter the network PASSWORD using the onscreen keypad.
7. Tap CONNECT to join the network or CANCEL to cancel.
8. Tap CONFIRM to return to the Settings Screen.

**To remove a Wi-Fi network:**

1. Tap SETTINGS from any of the mode screens. The Settings Screen will be displayed.
2. SCROLL through the Settings Screen pages to locate WIFI SETTINGS.
3. Tap WIFI SETTINGS. The WIFI Settings Screen will be displayed.
4. Locate the desired Wi-Fi network and tap REMOVE WIFI .
5. Tap REMOVE to remove the network or CANCEL to discard changes.
6. Tap CONFIRM to return to the Settings Screen.

## Ethernet Settings

The REGLO can connect to a network using Wi-Fi and Ethernet connections.

**NOTE:**

- Confirm that the Ethernet cable is securely attached to the Ethernet port at the rear of the pump drive.
- The Ethernet connection will take priority if both Wi-Fi and Ethernet are used simultaneously.

**To configure Ethernet settings:**

1. Tap SETTINGS from any of the mode screens. The Settings Screen will be displayed.
2. SCROLL through the Settings Screen pages to locate ETHERNET SETTINGS.
3. Tap ETHERNET SETTINGS. The Ethernet Settings Screen will be displayed.
4. Tap DHCP to automatically configure IP settings or STATIC to manually edit settings using the onscreen keypad.
5. Tap CONFIRM to save or CANCEL to discard changes.

## User Management

The REGLO allows user access to be controlled using configurable permission levels.

**Default permissions:**

- USER: Able to use basic pump drive functions and run programs.
- SUPER USER: Same level of access as USER but with the ability to create and modify programs.
- ADMIN: Full administrative access to the drive.

User and Super User permission levels can be configured to allow access to different Settings Menu items.

**Default ADMIN username and password:**

When switching on User Management for the first time, or following a factory reset, you will be prompted for a username and password. You must log in using the below default ADMIN user account details to access user management settings.

Default username: **admin**

Default password: **123456**

It is recommended that the default password be changed after logging in (see **Editing an existing user** below for information on changing user passwords).

**Configuring user level permissions:**

1. Tap SETTINGS from any of the mode screens. The Settings Screen will be displayed.
2. SCROLL through the Settings Screen pages to locate USER MANAGEMENT.
3. If required, tap the USER MANAGEMENT toggle to select ON.
4. Tap MODIFY USER.
5. Tap ACCESS LEVELS.
6. Tap USER or SUPERUSER.
7. Select the desired settings menu items to be included in the user level.
8. Tap CONFIRM to save or CANCEL to discard any changes.

**Adding a new user:**

1. Tap SETTINGS from any of the mode screens. The Settings Screen will be displayed.
2. SCROLL through the Settings Screen pages to locate USER MANAGEMENT.
3. If required, tap the USER MANAGEMENT toggle to select ON.
4. Tap MODIFY USER.
5. Tap NEW USER.
6. Tap USERNAME and enter the new username using the onscreen keypad.
7. Tap PASSWORD and enter the desired password using the onscreen keypad. **NOTE:** The password must be at least six characters long.
8. Tap the required PERMISSION LEVEL. **NOTE:** There must always be at least one ADMIN user.
9. Tap CONFIRM to save or CANCEL to discard any changes.

**Deleting a user:**

**NOTE:** There must always be at least one ADMIN user. ADMIN users cannot delete their own user profile.

1. Tap SETTINGS from any of the mode screens. The Settings Screen will be displayed.
2. SCROLL through the Settings Screen pages to locate USER MANAGEMENT.
3. Tap MODIFY USER.
4. Locate the desired username from the available list and then tap the DELETE USER icon located next to the username.
5. Tap DELETE to delete user or CANCEL to cancel.

**Editing an existing user:**

1. Tap SETTINGS from any of the mode screens. The Settings Screen will be displayed.
2. SCROLL through the Settings Screen pages to locate USER MANAGEMENT.
3. Tap MODIFY USER.
4. Select the desired username.
5. Edit as required.
6. Tap CONFIRM to save or CANCEL to discard any changes.

## Auto Start

The REGLO has an auto start that will resume pump operation when power is restored after a power outage.

**To enable auto start:**

1. Tap SETTINGS from any of the mode screens. The Settings Screen will be displayed.
2. SCROLL through the Settings Screen pages to locate AUTO START.
3. Tap the AUTO START toggle to select either ON or OFF.

# LOADING TUBING

## Cassette Models

| | |
|---|---|
|  | **CAUTION**: Turn the drive off before removing or installing tubing. Fingers or loose clothing could get caught in the drive mechanism. |

The REGLO Cassette models use MS/CA Click'n'go cassettes for easy loading and removal, and to allow for tubes with different diameters and materials to be used on the same roller-head. Cassettes are also available with pressure levers. For further information see "Cassettes" on page 5-2 and "Color-Coded Three-Stop Tubing" on page 5-3.

**NOTE:**

- Check to confirm that the rollers are clean and free of defects.
- Tubing should be clean and routed so that the bend radii are at a minimum of four (4) times the outside tube diameter and are as short as possible.
- Use the appropriate tube diameter for the required flow rate and viscosity.
- Recalibrate tubing regularly to maintain the best flow rate accuracy (for further information see "Tube Calibration" on page 3-14).
- After installing new tubing the pump should be run for 20-30 minutes to properly condition the tubing and increase dispense accuracy (for further information see "**To condition new tubing**" below).

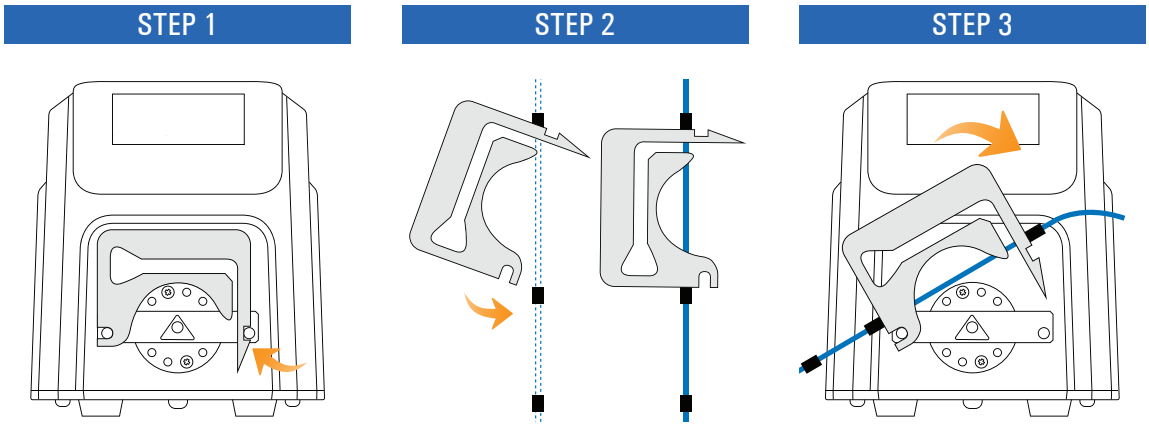


1. Remove the cassette by lightly pressing the fixing-tongue while simultaneously lifting the cassette.
2. Insert the tubing into the cassette:
   a. Insert the first stopper of the color-coded three-stop tubing into the cassette's front tube channel.
   b. Allow the tubing to hang freely to prevent twisting.
   c. Insert the second stopper of the tubing into the cassette's rear tube channel.
3. Replace the cassette onto the roller-head.

**To condition new tubing:**

After installing new tubing the pump should be run for 20-30 minutes at full rpm (160 rpm). This is recommended to properly condition new tubing and to increase dispense accuracy. If required, the pump can be run dry while conditioning.

1. Switch the drive on using the power switch located at the rear of the drive. **NOTE:** If User Management is enabled you may be prompted for a username and password (For further information see "User Management" on page 3-7).
2. Tap CONTINUOUS from the Mode Selection Screen. The Continuous Mode Run Screen will be displayed.
3. Select the flow rate and flow units:
   a. Tap FLOW RATE. The Flow Rate Screen will be displayed.
   b. Tap UNITS. The Flow Units Screen will be displayed.
   c. Tap RPM.
   d. Tap CONFIRM ✓ to return to the Flow Rate Screen.
   e. Tap FLOW RATE to select field and then enter 160 using the onscreen keypad.
   f. Tap CONFIRM ✓ to save and return to the Continuous Mode Screen.
4. Tap START ▶. The drive will commence operation.
5. Allow the pump to run for 20-30 minutes before tapping STOP ■. The tube is now conditioned and ready for priming, calibration, and use.

**NOTE:**

- Once the tube has been loaded and conditioned the new tube size will need to be selected from the Tube Size Screen. The Tube Size Screen can be accessed from the Continuous Mode Run Screen or from either of the Volume or Time Mode Edit screens.
- It is recommended that you calibrate new tubes to ensure accurate flow rate and fluid dispensing (for further information see "Tube Calibration" on page 3-14).
- When the pump is idle it is recommended that you release pressure from the tubing to protect it from unnecessary strain and prolong its service life. **To release tube pressure:** Press the cassette's fixing-tongue and raise the cassette slightly so that the tubing is released from the roller-head. **CAUTION**: Siphoning Effect: When pressure is released from the tubing, fluid can flow back to the reservoir.
- When using new tubing it is possible that the pump will not prime and/or will not dispense fluid (depending on the type of tubing used). If this occurs, it is recommended that you wet the tubing and then run the pump with the tubing for approximately 20-30 minutes.
- For applications with a high differential pressure (>1 bar), the use of a cassette with a pressure lever is recommended.

## Miniflex Models

| | |
|---|---|
|  | **CAUTION**: Turn the drive off before removing or installing tubing. Fingers or loose clothing could get caught in the drive mechanism. |

- Check to ensure that the rollers are clean and free of defects.
- Tubing should be clean and routed so that bend radii are at a minimum of four (4) times the outside tube diameter and are as short as possible.
- Use the appropriate tube diameter for the required flow rate and viscosity.
- Regularly recalibrate tubing to maintain the best accuracy of flow rates (for further information see "Tube Calibration" on page 3-14).
- After installing new tubing the pump should be run for 20-30 minutes to properly condition the tubing and increase dispense accuracy (for further information see "**To condition new tubing**" below).

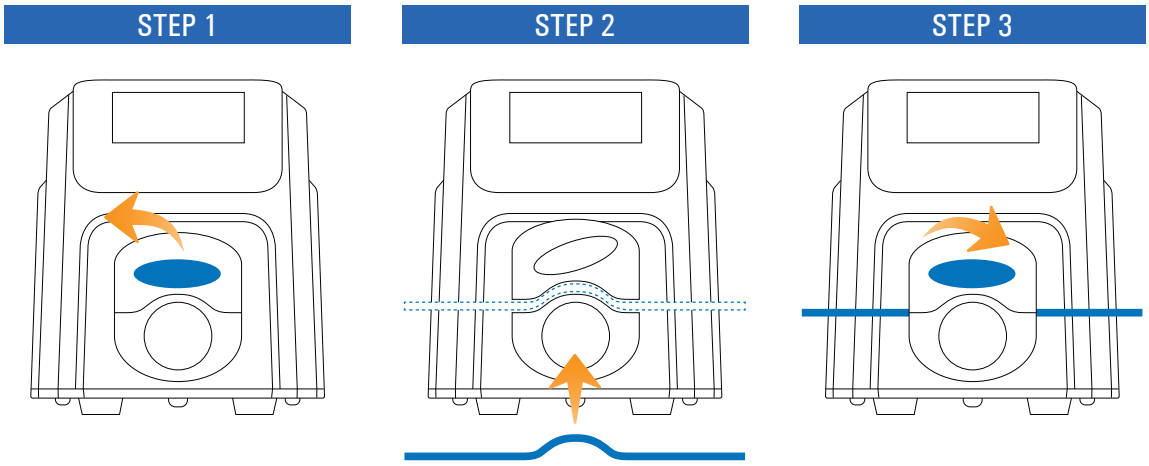


1. Turn the pump head handle counterclockwise to raise the upper section of the pump head.
2. Place the tube into the opening, ensuring that the tube is:
   a. Completely inside the pump head.
   b. Seated over the roller-head.
   c. Sitting in the V-shaped grooves located on either side of the pump head.
3. Turn the pump head handle clockwise to close the pump head.

**To condition new Miniflex tubing:**

After installing new tubing the pump should be run for 20-30 minutes at full rpm (350 rpm). This is recommended to properly condition new tubing and to increase dispense accuracy. If required, the pump can be run dry while conditioning.

1. Switch the drive on using the power switch located at the rear of the drive. **NOTE:** If User Management is enabled you may be prompted for a username and password (For further information see "User Management" on page 3-7).
2. Tap CONTINUOUS from the Mode Selection Screen. The Continuous Mode Run Screen will be displayed.
3. Select the flow rate and flow units:
   a. Tap FLOW RATE. The Flow Rate Screen will be displayed.
   b. Tap UNITS. The Flow Units Screen will be displayed.
   c. Tap RPM.
   d. Tap CONFIRM ✓ to return to the Flow Rate Screen.
   e. Tap FLOW RATE to select field and then enter 350 using the onscreen keypad.
   f. Tap CONFIRM ✓ to save and return to the Continuous Mode Screen.
4. Tap START ▶. The drive will commence operation.
5. Allow the pump to run for 20-30 minutes before tapping STOP ■. The tube is now conditioned and ready for priming, calibration, and use.

**NOTE:**

- Once the tube has been loaded and conditioned the new tube size will need to be selected from the Tube Size Screen. The Tube Size Screen can be accessed from the Continuous Mode Run Screen or from either of the Volume or Time Mode Edit screens.
- It is recommended that you calibrate new tubes to ensure accurate flow rate and fluid dispensing (for further information see "Tube Calibration" on page 3-14).
- When using new tubing it is possible that the pump will not prime and/or will not dispense fluid (depending on the type of tubing used). If this occurs, it is recommended that you wet the tubing and then run the pump with the tubing for approximately 20-30 minutes.

# PRIMING THE PUMP DRIVE

It is recommended that you prime the pump drive before use. Priming the pump draws fluid through the tubing and eliminates air pockets from the system.

| | |
|---|---|
|  | **CAUTION**: Turn the drive off before removing or installing tubing. Fingers or loose clothing could get caught in the drive mechanism. |

**Example Flow System**

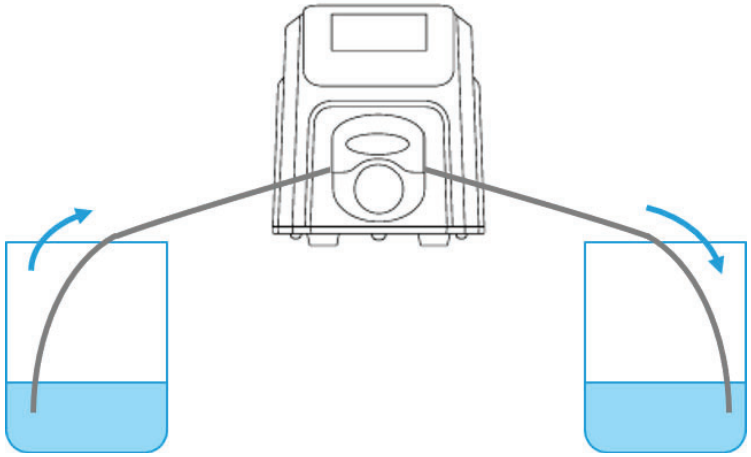

**To prime the pump drive:**

1. Insert the tubing into the pump head (for further information see "Loading Tubing" on page 3-9).
2. Insert the tube inlet into the supply fluid.
3. Insert the tube outlet into an appropriate container.
4. Switch the drive on using the power switch located at the rear of the drive. **NOTE:** If User Management is enabled you may be prompted for a username and password (For further information see "User Management" on page 3-7).
5. Navigate to the Continuous, Time or Volume Mode screens.
6. Press and hold PRIME ▶▶ until there are no bubbles visible in the tubing. Priming will stop when PRIME ▶▶ is released.

# TUBE CALIBRATION

To ensure accurate dispensing of fluids, tube calibration should be performed whenever fluids, flow rate or tubing is changed. Tube calibration can be accessed from the Continuous Mode Run Screen or from either of the Volume or Time Mode Edit screens.

## Tube Calibration Screen

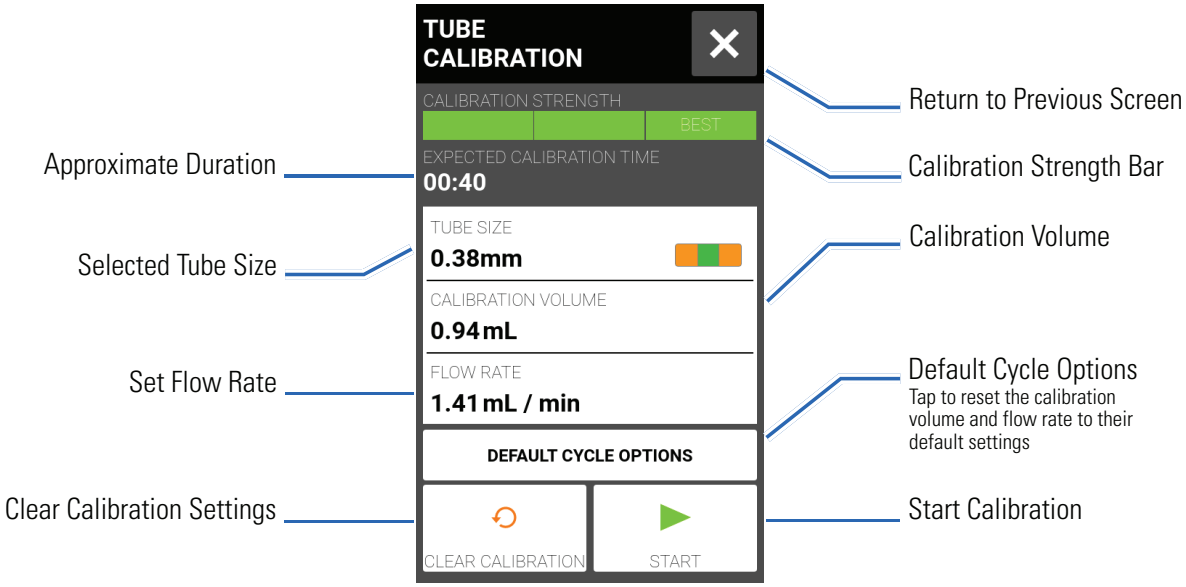


**General Preparation:**

- Confirm the correct tubing has been selected and is properly loaded into the pump drive (for further information see "Loading Tubing" on page 3-9).
- Confirm all fluids and containers are ready.

**To calibrate tubing:**

1. Insert the tube inlet into the supply fluid.
2. Insert the tube outlet into a suitable container. **NOTE:** The container should be graduated or placed on a scale for increased accuracy. If using a scale, an acceptable weight to volume conversion for water is: 1 gram = 1 mL.
3. Switch the drive on using the power switch located at the rear of the drive. **NOTE:** If User Management is enabled you may be prompted for a username and password (For further information see "User Management" on page 3-7).
4. Navigate to the Continuous, Time or Volume Mode screens.
5. Tap DIRECTION to select either clockwise or counterclockwise flow direction.
6. If required, Tap START and allow the pump to run for approximately 20-30 minutes. This step is recommended to properly condition new tubing and to increase calibration accuracy. **NOTE:** If required, the pump can be run dry while conditioning the tube.

7. Press and hold PRIME ▶▶ to prime the pump. Priming will stop when PRIME ▶▶ is released.
8. Tap SIZE from the Continuous Mode Screen or tap EDIT ✎ and then SIZE if either the Volume or Time Mode Screen is displayed. The Tube Size Screen will be displayed.
   a. Select the desired tube size from the list of available options.
   b. Tap CONFIRM ✓ to save or CANCEL ✕ to discard changes and return to previous screen.
9. Tap CALIBRATE ⌖. The Tube Calibration Screen will be displayed.
10. Tap CALIBRATION VOLUME. The Calibration Volume Screen will be displayed.
    a. Enter the desired calibration volume using the onscreen keypad. **NOTE:** The default volume or greater will ensure the best calibration.
    b. Tap CONFIRM ✓ to save or CANCEL ✕ to discard changes and return to the previous screen.
11. Tap FLOW RATE. The Calibration Flow Rate Screen will be displayed.
    a. Enter the desired flow rate using the onscreen keypad.
    b. Tap CONFIRM ✓ to save or CANCEL ✕ to discard changes and return to the previous screen. **NOTE:** The drive will adjust the displayed flow rate after calibration is complete.
12. Tap START ▶ to begin calibration. **NOTE:** Calibration progress will be displayed on the touchscreen.
13. When calibration is complete use the onscreen keypad to enter the measured volume of fluid from the tube outlet container.
14. Tap CONFIRM ✓ to complete calibration and return to the previous mode screen. Calibration Complete ⌖ should now be displayed to indicate that calibration has been completed for the current tube size, tube volume, and flow rate.

**NOTE:**

- The estimated accuracy for the selected calibration settings is shown in the Calibration Strength Bar on the Tube Calibration Screen. Calibration accuracy can be improved by using a larger calibration volume and/or altering the flow rate.
- Calibration settings are retained and transferred to other mode screens when entering or leaving the Tube Calibration Screen.
- If the drive is stopped during calibration the calibration will be discarded and the previous mode screen will be displayed. Empty the container before restarting the procedure.
- Calibration time at the maximum allowable flow rate (default max flow rate) is approximately 10 seconds. Calibration time at the minimum allowable flow rate (approximately 4% of the maximum flow rate) is 4 minutes.
- Minimum and maximum flow rates will change after calibration due to a recalculation of the volume of fluid per pump revolution.
- The best results are obtained after tubing has been run in the pump for approximately 20-30 minutes.
- Steps 9–14 can be repeated as necessary to optimize the accuracy of the tubing calibration.

# SECTION 3: OPERATION

| | |
|---|---|
|  | **WARNING:** Tube breakage may result in fluid being sprayed from the pump. Use appropriate measures to protect operator and equipment. |
|  | **CAUTION:** Keep fingers away from the rotor while the pump is in operation. Stop the pump before loading or unloading tubing. |
|  | **CAUTION:** Hot Surface. Do not touch. |
|  | **CAUTION:** To avoid electrical shock, the power cord protective grounding conductor must be connected to ground. Not for operation in wet locations as defined by EN61010-1. |

## MODE SELECTION SCREEN

The Mode Selection Screen allows access to the drive's four basic operation modes (CONTINUOUS, TIME, VOLUME, and ANALOG INPUT) as well as the New Program Screen and user defined programs. The Mode Selection Screen can be accessed from any of the mode screens by tapping the MODE NAME BANNER.

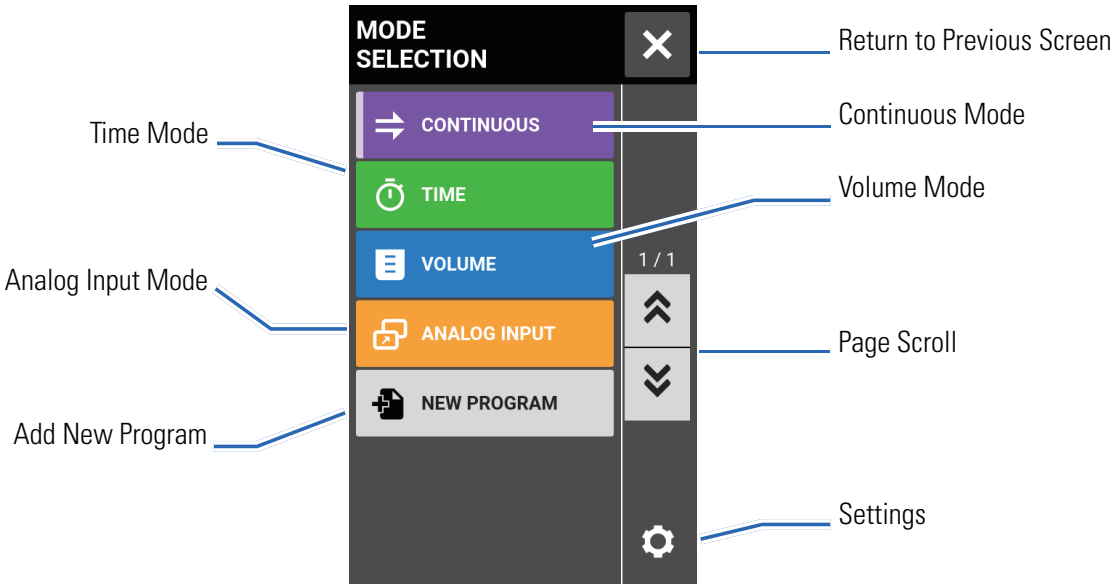


Tap the desired mode or program to access individual mode or program screens.

# CONTINUOUS MODE

In Continuous Mode the pump will operate at a selected rpm and/or flow rate until stopped by the user.

## Continuous Mode Run Screen

The Continuous Mode Run Screen is accessed by selecting CONTINUOUS from the Mode Selection Screen.

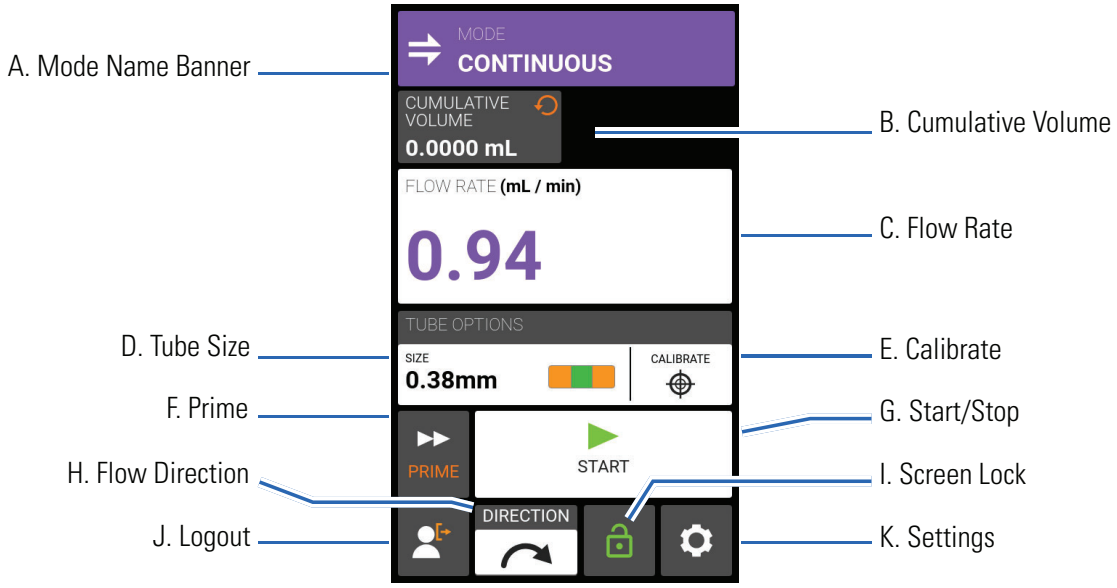


A. MODE NAME BANNER: Tap the Mode Name Banner to return to the Mode Selection Screen.

B. CUMULATIVE VOLUME: Displays the current cumulative volume of fluid that has been pumped. **To reset the cumulative volume:** Press and hold CUMULATIVE VOLUME RESET until the display changes to zero.

C. FLOW RATE: Displays the current flow rate in the unit of measurement selected by the user. Tap to access the Flow Rate Screen.

D. SIZE: Tap to access the Tube Size Screen.

E. CALIBRATE: Tap to access the Calibration Screen (for further information see "Tube Calibration" on page 3-14). Once calibration has been completed for the current tube size Calibration Complete will be displayed.

F. PRIME: Press and hold to prime the pump drive (for further information see "Priming the Pump Drive" on page 3-13).

G. START/STOP: Tap START to begin operation. Once operation has commenced STOP will be displayed.

H. FLOW DIRECTION: Tap DIRECTION to select either clockwise or counterclockwise .

I. SCREEN LOCK: Locking the screen disables all touchscreen functions. **To lock the screen:** Press and

hold UNLOCKED until the icon changes to LOCKED and a red border appears around the screen. **To unlock the screen:** Press and hold LOCKED until the icon changes to UNLOCKED .

J. LOGOUT: Tap to log out a user. **NOTE:** This option is only available if User Management is enabled in Settings (for further information see "User Management" on page 3-7).

K. SETTINGS: Tap to access the Settings Screen (for further information see "Settings" on page <OV>).

## Continuous Mode Operation

**General Preparation:**

- Confirm the correct tubing has been selected and is properly loaded into the pump drive (for further information see "Loading Tubing" on page 3-9).
- Confirm all fluids and containers are ready.
- Switch the drive on using the power switch located at the rear of the drive. **NOTE:** If User Management is enabled you may be prompted for a username and password (For further information see "User Management" on page 3-7). The touchscreen display will revert to the previously used operation mode.
- Confirm that the tubing has been calibrated by checking that Calibration Complete is displayed on the Continuous Mode Run Screen (for further information see "Tube Calibration" on page 3-14).
- If required, prime the pump before operation (for further information see "Priming the Pump Drive" on page 3-13).

**To operate the pump in Continuous Mode:**

1. Tap CONTINUOUS from the Mode Selection Screen. The Continuous Mode Run Screen will be displayed.
2. If required, Press and hold CUMULATIVE VOLUME RESET to reset the display to zero.
3. Select the desired flow rate and flow units:
   a. Tap FLOW RATE to access the Flow Rate Screen.
   b. Tap UNITS to access the Flow Units Screen and select the desired flow unit from the available list.
   c. Tap CONFIRM to save or CANCEL to discard changes and return to the Flow Rate Screen.
   d. Tap FLOW and enter the desired flow rate using the onscreen keypad.
   e. Tap CONFIRM to save or CANCEL to discard changes and return to the Continuous Mode Screen.
4. Tap SIZE. The Tube Size Screen will be displayed.
   a. Select the desired tube size from the list of available options.
   b. Tap CONFIRM to save or CANCEL to discard changes and return to the Continuous Mode Run Screen.
5. If required, tap CALIBRATE to calibrate the pump for the selected tube and flow rate.
6. Tap DIRECTION to select either clockwise or counterclockwise flow direction.
7. Tap START . The drive will commence operation at the flow rate and direction shown.
8. Tap STOP when the drive operation is no longer required. **NOTE:** In Continuous Mode the drive will continue to operate at the displayed flow rate and direction until stopped.

## Saving Continuous Mode Settings as a New Program

Changes made to mode parameters can be saved as a new program for easier access to frequently used settings. **NOTE:** If User Management is enabled only users with authorization can create and modify programs (for further information see "User Management" on page 3-7).

**To save mode parameters to a new program:**

1. If required, edit the Continuous Mode settings as desired.
2. Tap MODE NAME BANNER to return to the Mode Selection Screen.
3. Tap NEW PROGRAM. **NOTE:** If NEW PROGRAM is not displayed on the Mode Selection Screen tap SCROLL » to view additional pages.
4. Tap CONTINUOUS. The Continuous New Program Screen will be displayed with the last settings used in the Continuous Mode.
5. Tap PROGRAM1. If required, delete the characters using the back arrow on the onscreen keypad and then enter the desired program name (up to 8 characters).
6. Tap CONFIRM to save or DELETE to cancel.

**NOTE:**

- Once saved, new programs are added in alphabetical order to the bottom of the Mode Selection Screen.
- If there are multiple programs tapping SCROLL » will display additional pages.

# TIME MODE

In Time Mode the pump will operate at a selected rpm and/or flow rate for a selected time and/or batch total. At the completion of the selected time or batch total the pump will automatically stop.

## Time Mode Run Screen

The Time Mode Run Screen is accessed by selecting TIME from the Mode Selection Screen.

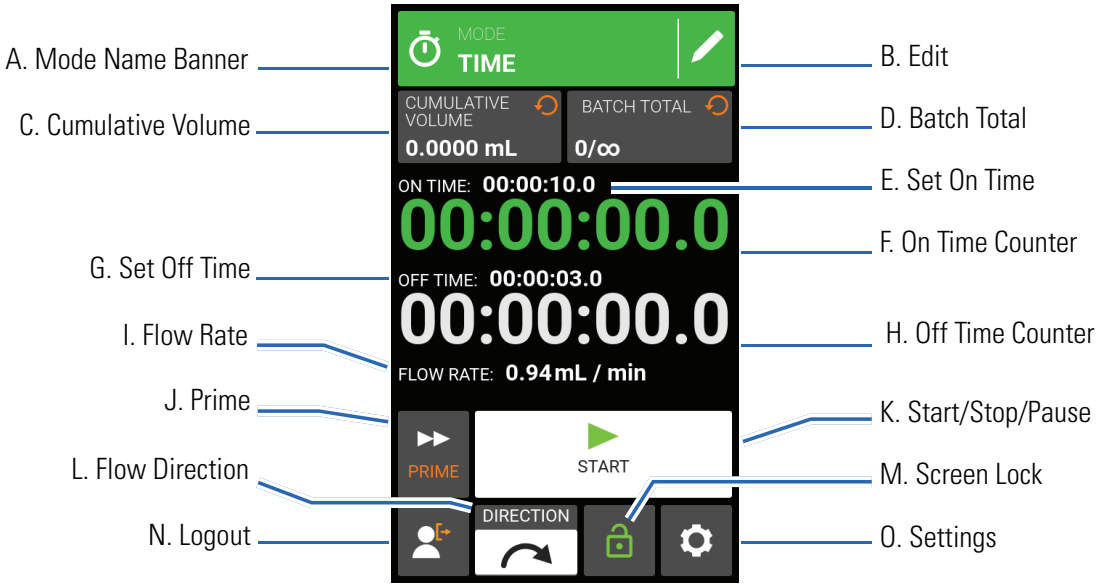


A. MODE NAME BANNER: Tap the Mode Name Banner to return to the Mode Selection Screen.

B. EDIT: Tap to access the Time Mode Edit Screen. From the Time Mode Edit Screen changes can be made to flow rate, flow units, tube size, tube calibration, on time, off time, and batch total.

C. CUMULATIVE VOLUME: Displays the current Cumulative Volume of fluid that has been pumped. **To reset the cumulative volume:** Press and hold CUMULATIVE VOLUME RESET ↻ until the display changes to zero.

D. BATCH TOTAL: Displays the number of dispenses that have been completed in the current batch. **To reset the batch total:** Press and hold BATCH RESET ↻ until the display changes to zero.

E. SET ON TIME: Displays the set dispense operation time.

F. ON TIME COUNTER: Displays a countdown of the set dispense time during operation.

G. SET OFF TIME: Displays the set duration of time the pump pauses between each dispense operation.

H. OFF TIME COUNTER: Displays a countdown of the set off time during operation.

I. FLOW RATE: Displays the current flow rate in the unit of measurement selected by the user.

J. PRIME: Press and hold to prime the pump drive (for further information see "Priming the Pump Drive" on page 3-13).

K. START/STOP/PAUSE: During operation, the display will change from START ▶ to PAUSE ❚❚ STOP/RESET ■.

L. FLOW DIRECTION: Tap DIRECTION to select either clockwise or counterclockwise flow direction.

M. SCREEN LOCK: Locking the screen disables all touchscreen functions. **To lock the screen:** Press and hold UNLOCKED until the icon changes to LOCKED and a red border appears around the screen. **To unlock the screen:** Press and hold LOCKED until the icon changes to UNLOCKED.

N. LOGOUT: Tap to log out a user. **NOTE:** This option is only available if User Management is enabled in Settings (for further information see "User Management" on page 3-7).

O. SETTINGS: Tap to access the Settings Screen (for further information see "Settings" on page <OV>).

## Time Mode Edit Screen

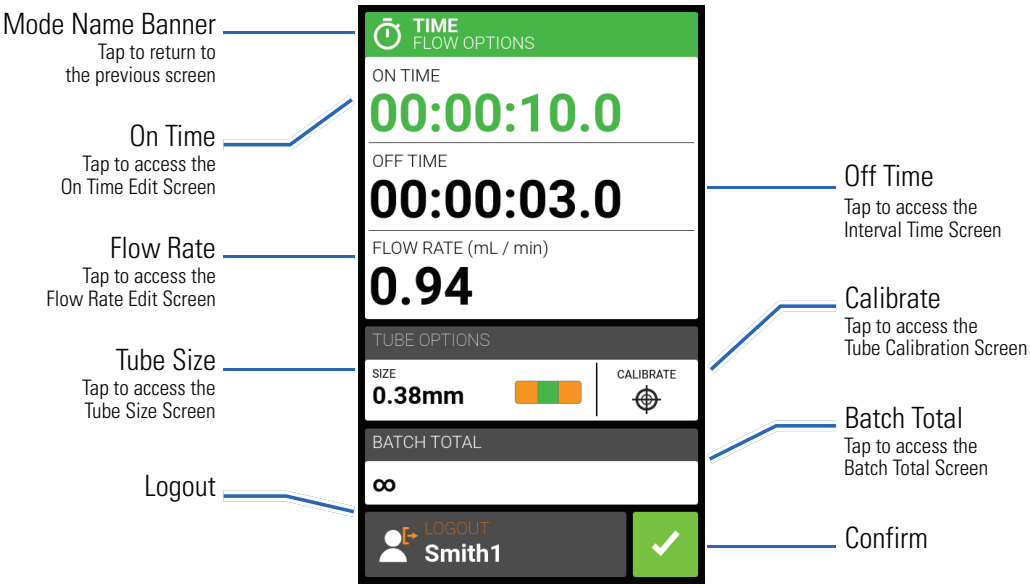


## Time Mode Operation

**General Preparation:**

- Confirm the correct tubing has been selected and is properly loaded into the pump drive (for further information see "Loading Tubing" on page 3-9).
- Confirm all fluids and containers are ready.
- Switch the drive on using the power switch located at the rear of the drive. **NOTE:** If User Management is enabled you may be prompted for a username and password (For further information see "User Management" on page 3-7). The touchscreen display will revert to the previously used operation mode.
- Confirm that the tubing has been calibrated by checking that Calibration Complete is displayed on the Time Mode Edit Screen (for further information see "Tube Calibration" on page 3-14).
- If required, prime the pump before operation (for further information see "Priming the Pump Drive" on page 3-13).

**To operate the pump in Time Mode:**

1. Tap TIME from the Mode Selection Screen. The Time Mode Run Screen will be displayed.
2. Tap EDIT ✎ to access the Time Mode Edit Screen.
3. Tap ON TIME to set the amount of time for each pump operation. The On Time Edit Screen will be displayed.
   a. Tap HR, MIN, SEC or TENTHS and enter the desired time using the onscreen keypad.
   b. Tap CONFIRM ✓ to save or CANCEL ✕ to discard changes and return to the Time Mode Edit Screen.
4. Tap OFF TIME to set the amount of time the pump will pause between each operation. The Off Time Edit Screen will be displayed. **NOTE:** If the off time is set to 0 (zero) the pump drive will require a start input (from either the touchscreen or a wired input) to start the next dispense.
   a. Tap HR, MIN, SEC or TENTHS and enter the desired time using the onscreen keypad.
   b. Tap CONFIRM ✓ to save or CANCEL ✕ to discard changes and return to the Time Mode Edit Screen.
5. Tap FLOW RATE. The Flow Rate Edit Screen will be displayed.
   a. Tap UNITS to access the Flow Units Screen and select the desired flow unit from the available list.
   b. Tap CONFIRM ✓ to save or CANCEL ✕ to discard changes and return to the previous screen.
   c. Tap FLOW and enter the desired flow rate using the onscreen keypad.
   d. Tap CONFIRM ✓ to save or CANCEL ✕ to discard changes and return to the Time Mode Edit Screen.
6. Tap SIZE. The Tube Size Screen will be displayed.
   a. Select the desired tube size from the list of available options.
   b. Tap CONFIRM ✓ to save or CANCEL ✕ to discard changes and return to the Time Mode Edit Screen.
7. Tap BATCH TOTAL to adjust the number of dispenses in each batch cycle. The Batch Total Screen will be displayed.
   a. Enter the desired number of dispenses in a batch using the onscreen keypad. **NOTE:** If required, tap INFINITE ∞ to select an infinite number of dispense cycles. If infinite is selected, the pump will run continuously.
   b. Tap CONFIRM ✓ to save or CANCEL ✕ to discard changes and return to the Time Mode Edit Screen.
8. Tap CONFIRM ✓ to return to the Time Dispense Mode Run Screen.
9. Tap DIRECTION to select either clockwise ↷ or counterclockwise ↶ flow direction.
10. Tap START ▶. The pump will now operate until the batch total is completed or until PAUSE ❚❚ or STOP ■ is tapped.
11. If required, adjustments can be made to any of the Time Mode option settings during operation. To make any adjustments:
    a. Tap PAUSE ❚❚ and then repeat steps 2–9 above.
    b. Tap CONTINUE ▶ to complete the pump operation once the desired changes have been made.

## Saving Time Mode Settings as a New Program

Changes made to mode parameters can be saved as a new program for easier access to frequently used settings. **NOTE:** If User Management is enabled only users with authorization can create and modify programs (for further information see "User Management" on page 3-7).

**To save mode parameters to a new program:**

1. If required, edit the Time Mode settings as desired.
2. Tap MODE NAME BANNER to return to the Mode Selection Screen.
3. Tap NEW PROGRAM. **NOTE:** If NEW PROGRAM is not displayed on the Mode Selection Screen tap SCROLL » to view additional pages.
4. Tap TIME. The Time New Program Screen will be displayed with the last settings used in the Time Mode.
5. Tap PROGRAM1. If required, delete the characters using the back arrow on the onscreen keypad and then enter the desired program name (up to 8 characters).
6. Tap CONFIRM to save or DELETE to cancel.

**NOTE:**

- Once saved, new programs are added in alphabetical order to the bottom of the Mode Selection Screen.
- If there are multiple programs tapping SCROLL » will display additional pages.

# VOLUME MODE

In Volume Mode the pump will operate at a selected rpm and/or flow rate until a selected volume of fluid has been pumped. When the selected volume has been pumped the drive will automatically stop.

## Volume Mode Run Screen

The Volume Mode Run Screen is accessed by selecting VOLUME from the Mode Selection Screen.

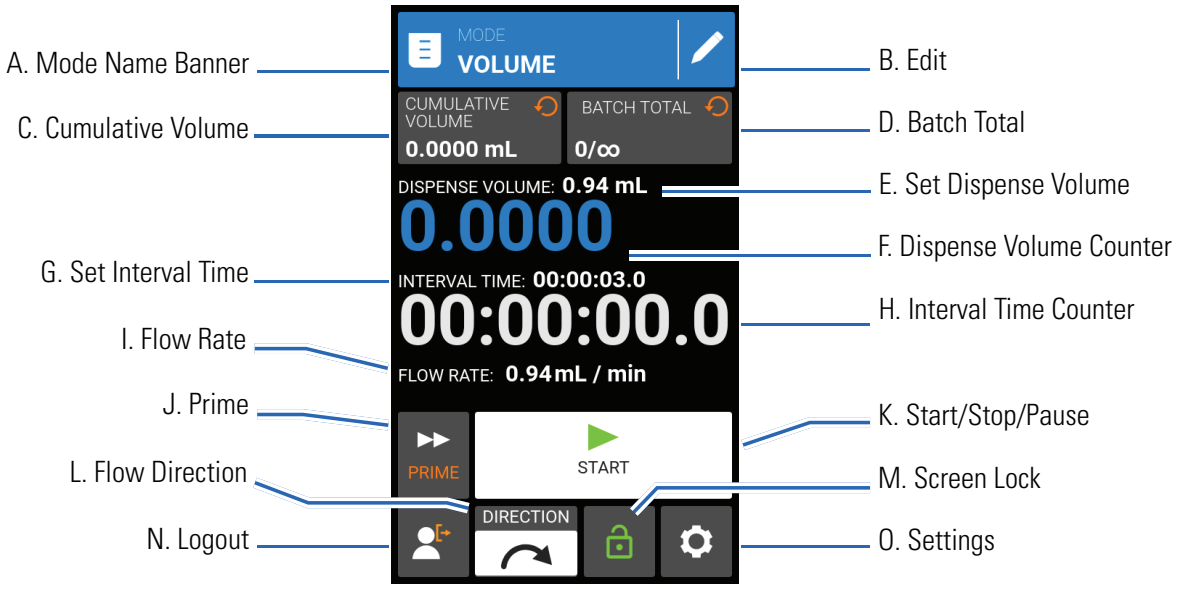


A. MODE NAME BANNER: Tap the Mode Name Banner to return to the Mode Selection Screen.

B. EDIT: Tap to access the Volume Mode Edit Screen. From the Volume Mode Edit Screen adjustments can be made to dispense volume, interval time, flow rate, tube options, anti-drip functions, calibration and batch total. **NOTE:** Edit is inactive during operation.

C. CUMULATIVE VOLUME: Displays the current Cumulative Volume of fluid that has been pumped. **To reset the cumulative volume:** Press and hold CUMULATIVE VOLUME RESET ↻ until the display changes to zero.

D. BATCH TOTAL: Displays the number of dispenses that have been completed in the current batch. **To reset the batch total:** Press and hold BATCH RESET ↻ until the display changes to zero.

E. SET DISPENSE VOLUME: Displays the selected volume of fluid for dispensing.

F. DISPENSE VOLUME COUNTER: Displays a countdown of the fluid volume during operation.

G. SET INTERVAL TIME: Displays the set time the pump pauses between dispenses.

H. INTERVAL TIME COUNTER: Displays a countdown of the set interval time during operation.

I. FLOW RATE: Displays the current flow rate in the unit of measurement selected by the user.

J. PRIME: Press and hold to prime the pump drive (for further information see "Priming the Pump Drive" on page 3-13).

K. START/STOP/PAUSE: During operation, the display will change from START ▶ to PAUSE ❚❚ STOP/RESET ■.

L. FLOW DIRECTION: Tap DIRECTION to select either clockwise ↷ or counterclockwise ↶ flow direction.

M. SCREEN LOCK: Locking the screen disables all touchscreen functions. **To lock the screen:** Press and hold UNLOCKED 🔓 until the icon changes to LOCKED 🔒 and a red border appears around the screen. **To unlock the screen:** Press and hold LOCKED 🔒 until the icon changes to UNLOCKED 🔓.

N. LOGOUT: Tap to log out a user. **NOTE:** This option is only available if User Management is enabled in Settings (for further information see "User Management" on page 3-7).

O. SETTINGS: Tap to access the Settings Screen (for further information see "Settings" on page <OV>).

## Volume Mode Edit Screen

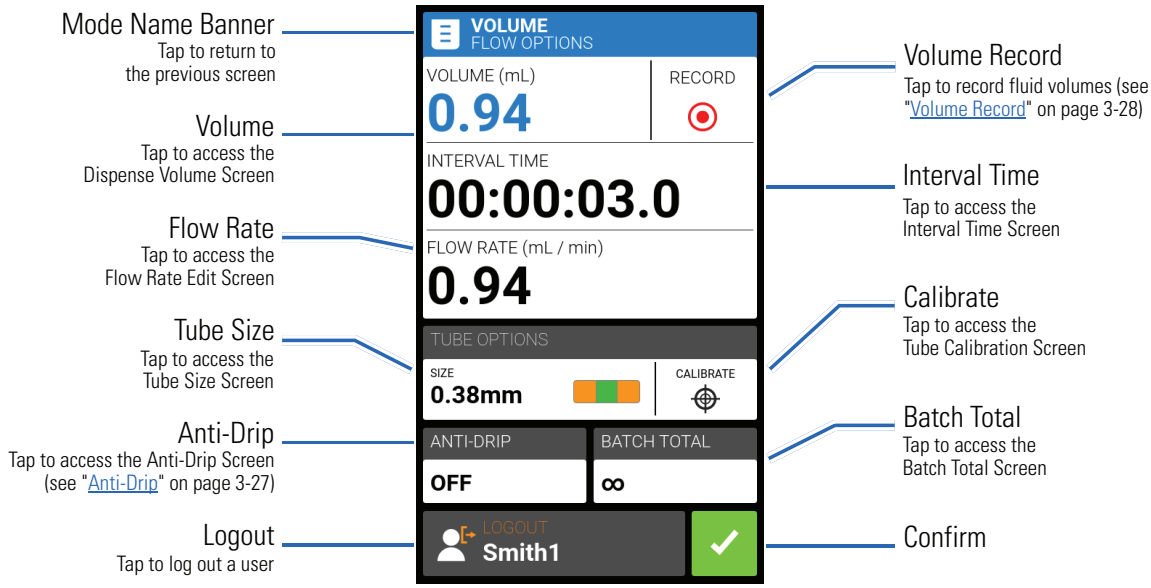


## Volume Dispense Mode Operation

**General Preparation:**

- Confirm the correct tubing has been selected and is properly loaded into the pump drive (for further information see "Loading Tubing" on page 3-9).
- Confirm all fluids and containers are ready.
- Switch the drive on using the power switch located at the rear of the drive. **NOTE:** If User Management is enabled you may be prompted for a username and password (For further information see "User Management" on page 3-7). The touchscreen display will revert to the previously used operation mode.
- Confirm that the tubing has been calibrated by checking that Calibration Complete is displayed on the Volume Mode Edit Screen (for further information see "Tube Calibration" on page 3-14).
- If required, prime the pump before operation (for further information see "Priming the Pump Drive" on page 3-13).

**To operate the pump in Volume Mode:**

1. Tap VOLUME from the Mode Selection Screen. The Volume Mode Run Screen will be displayed.
2. Tap EDIT ✎ to access the Volume Mode Edit Screen.
3. Tap VOLUME. The Dispense Volume Screen will be displayed.
   a. Tap VOLUME and enter the desired volume using the onscreen keypad. **NOTE:** If the volume of fluid is unknown the pump drive can record fluid dispense volumes (for further information see "Volume Record" on page 3-28).
   b. Tap RAMP UP ◢ to set the time the pump takes to reach full flow rate (between 0 and 60 seconds) using the onscreen keypad.
   c. Tap RAMP DOWN ◣ to set the time the pump takes to stop at the end of each dispense operation (between 0 and 60 seconds) using the onscreen keypad.
   d. Tap CONFIRM ✓ to save or CANCEL ✕ to discard changes and return to the Volume Mode Edit Screen.
4. Tap INTERVAL TIME to set the amount of time the pump will pause between each operation. The Interval Time Screen will be displayed. **NOTE:** If the interval time is set to 0 (zero) the pump drive will require a start input (from either the touchscreen or a wired input) to start the next dispense.
   a. Tap HR, MIN, SEC or TENTHS and enter the desired time using the onscreen keypad.
   b. Tap CONFIRM ✓ to save or CANCEL ✕ to discard changes and return to the Volume Mode Edit Screen.
5. Tap FLOW RATE. The Flow Rate Edit Screen will be displayed.
   a. Tap UNITS to access the Flow Units Screen and select the desired flow unit from the available list.
   b. Tap CONFIRM ✓ to save or CANCEL ✕ to discard changes and return to the previous screen.
   c. Tap FLOW and enter the desired flow rate using the onscreen keypad.
   d. Tap CONFIRM ✓ to save or CANCEL ✕ to discard changes and return to the Volume Mode Edit Screen.
6. Tap SIZE. The Tube Size Screen will be displayed.
   a. Select the desired tube size from the list of available options.
   b. Tap CONFIRM ✓ to save or CANCEL ✕ to discard changes and return to the Volume Mode Edit Screen.
7. Tap BATCH TOTAL to adjust the number of dispenses in each batch cycle. The Batch Total Screen will be displayed.
   a. Enter the desired number of dispenses in a batch using the onscreen keypad. **NOTE:** If required, tap INFINITE ∞ to select an infinite number of dispense cycles. If infinite is selected, the pump will run continuously.
   b. Tap CONFIRM ✓ to save or CANCEL ✕ to discard changes and return to the Volume Mode Edit Screen.
8. If required, tap ANTI-DRIP. The Anti-Drip Screen will be displayed (for further information see "Anti-Drip" on page 3-27).
   a. Tap ON or OFF to enable or disable the Anti-Drip feature.

b. If enabled, enter the desired degrees of reverse rotation using the onscreen keypad. **NOTE:** Typical values range from 5 to 45 degrees.

c. Tap CONFIRM ✓ to save or CANCEL ✕ to discard changes and return to the Volume Mode Edit Screen.

9. Tap CONFIRM ✓ to return to the Volume Mode Run Screen.
10. Tap DIRECTION to select either clockwise ↷ or counterclockwise ↶ flow direction.
11. Tap START ▶. The pump will now operate until the batch total is completed or until PAUSE ❚❚ or STOP ■ is tapped.
12. If required, adjustments can be made to any of the Volume Mode option settings during operation. To make any adjustments:
    a. Tap PAUSE ❚❚ and then repeat steps 2–10 above.
    b. Tap CONTINUE ▶ to complete the pump operation once the desired changes have been made.

## Saving Volume Mode Settings as a New Program

Changes made to mode parameters can be saved as a new program for easier access to frequently used settings. **NOTE:** If User Management is enabled only users with authorization can create and modify programs (for further information see "User Management" on page 3-7).

**To save mode parameters to a new program:**

1. If required, edit the Volume Mode settings as desired.
2. Tap MODE NAME BANNER to return to the Mode Selection Screen.
3. Tap NEW PROGRAM. **NOTE:** If NEW PROGRAM is not displayed on the Mode Selection Screen tap SCROLL » to view additional pages.
4. Tap VOLUME. The Volume New Program Screen will be displayed with the last settings used in the Volume Mode.
5. Tap PROGRAM1. If required, delete the characters using the back arrow on the onscreen keypad and then enter the desired program name (up to 8 characters).
6. Tap CONFIRM to save or DELETE to cancel.

**NOTE:**

- Once saved, new programs are added in alphabetical order to the bottom of the Mode Selection Screen.
- If there are multiple programs tapping SCROLL » will display additional pages.

## Anti-Drip

The Anti-Drip feature minimizes drips after fluid has been dispensed by reversing the pump direction to draw fluid back from the end of the tubing. Fluid drip can be caused by numerous factors, including tube size, tube orientation, and the viscosity of the fluid.

**To enable or disable the Anti-Drip feature:**

1. Tap VOLUME from the Mode Selection Screen. The Volume Mode Screen will be displayed.

2. Tap EDIT .
3. Tap ANTI-DRIP. The Anti-Drip Screen will be displayed.
4. Tap ON or OFF to enable or disable ANTI-DRIP.
5. If enabled, enter the desired degrees of reverse rotation using the onscreen keypad. **NOTE:** Typical values range from 5 to 45 degrees.
6. Tap CONFIRM to save or CANCEL to discard changes and return to the Volume Mode Screen.

## Volume Record

The Volume Record feature can be used to record unknown fluid volumes.

**General Preparation:**

- Confirm the correct tubing has been selected and is properly loaded into the pump drive (for further information see "Loading Tubing" on page 3-9).
- Confirm all fluids and containers are ready.
- Confirm that the tubing has been calibrated by checking that Calibration Complete is displayed on the Volume Mode Edit Screen (for further information see "Tube Calibration" on page 3-14).
- If required, prime the pump before operation (for further information see "Priming the Pump Drive" on page 3-13).

**To record a fluid volume:**

1. Tap VOLUME from the Mode Selection Screen. The Volume Mode Run Screen will be displayed.
2. Tap EDIT to access the Volume Mode Edit Screen.
3. Tap RECORD . The Record Dispense Screen will be displayed.
4. Tap FLOW RATE to make adjustments to the flow rate. The Flow Rate Screen will be displayed.
   a. Tap FLOW to enter the desired flow rate using the onscreen keypad.
   b. Tap UNITS to enter the desired flow rate units using the onscreen keypad.
   c. Tap CONFIRM to save changes and return to the Record Dispense Screen.
5. Tap START . The drive will now begin pump operation while recording the fluid volume.
6. If required, adjustments can be made to flow rate during operation. To make adjustments:
   a. Tap STOP and then repeat steps 4–6 above.
   b. Tap START to complete the pump operation once the desired changes have been made. **NOTE:** If required, tap STOP and then CANCEL to discard recording and return to the Volume Mode Edit Screen.
7. Tap STOP when the desired volume of fluid has been pumped. The recorded dispense volume will now be displayed under VOLUME.
8. Tap CONFIRM to save or CANCEL to discard recording and return to the Volume Mode Edit Screen. If saved, the recorded dispense volume will now be displayed under VOLUME.
9. Tap CONFIRM . The Volume Mode Run Screen will be displayed.

# ANALOG INPUT MODE

| | |
|---|---|
| ⚠ | **CAUTION**: Power must be turned off before connecting the external analog control cable to prevent damage to the drive. |

The REGLO Digital Pump Drive can be controlled and monitored through the pump drive's DB-25 female connection port. See www.masterflex.com for more information.

## Analog Input Mode Run Screen

The Analog Input Mode Run Screen will be displayed on the pump drive's touchscreen during analog input operation. The screen displays the currently selected operation dispense settings from an external remote control device. The Analog Input Mode Run Screen is accessed by selecting ANALOG INPUT from the Mode Selection Screen.

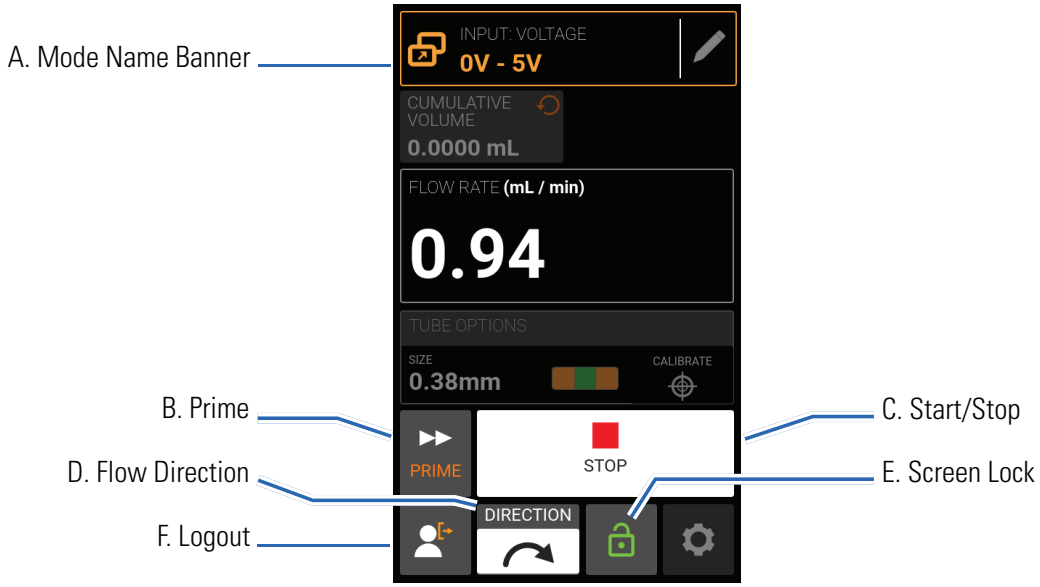


A. MODE NAME BANNER: Displays the Mode Name as well as the currently selected input type (ANALOG CURRENT or ANALOG VOLTAGE). Tap the Mode Name Banner to return to the Mode Selection Screen.

B. PRIME: Press and hold to prime the pump drive (for further information see "Priming the Pump Drive" on page 3-13).

C. START/STOP: During operation, the display will change from START ▶ to STOP ■.

D. FLOW DIRECTION: Tap DIRECTION to select either clockwise ↷ or counterclockwise ↶ flow direction.

E. SCREEN LOCK: Locking the screen disables all touchscreen functions. **To lock the screen:** Press and hold UNLOCKED 🔓 until the icon changes to LOCKED 🔒 and a red border appears around the screen. **To unlock the screen:** Press and hold LOCKED 🔒 until the icon changes to UNLOCKED 🔓.

F. LOGOUT: Tap to log out a user. **NOTE:** This option is only available if User Management is enabled in Settings (for further information see "User Management" on page 3-7).

## Analog Input

| | |
|---|---|
| ⚠ | **CAUTION**: Power must be turned off before connecting the external analog control cable to prevent damage to the drive. |

The REGLO supports and controls analog input using suitable equipment through the pump drive's DB-25 female connection port. Analog input can be used in place of, or in addition to, MasterflexLive™.

See also "DB-25 Electrical Connections" on page <OV>.

**General Preparation:**

- Confirm the correct tubing has been selected and is properly loaded into the pump drive (for further information see "Loading Tubing" on page 3-9).
- Confirm all fluids and containers are ready.
- Switch the drive on using the power switch located at the rear of the drive. **NOTE:** If User Management is enabled you may be prompted for a username and password (For further information see "User Management" on page 3-7). The touchscreen display will revert to the previously used operation mode.
- Confirm that the tubing has been calibrated by checking that Calibration Complete is displayed on the Analog Input Mode Run Screen (for further information see "Tube Calibration" on page 3-14).
- If required, prime the pump before operation (for further information see "Priming the Pump Drive" on page 3-13).
- Confirm that the pump drive is connected to the appropriate equipment through the drive's DB-25 female connection port.

**To operate analog input control and monitoring:**

1. Tap ANALOG INPUT from the Mode Selection Screen. The Analog Input Mode Run Screen will be displayed.
2. Tap EDIT . The Analog Input Mode Edit Screen will be displayed.
3. Tap the desired analog input type from the available list.
4. If using either ANALOG: VOLTAGE or ANALOG: CURRENT:
   a. Select the desired current or voltage operating range from the available list.
   b. Tap CONFIRM to save or CANCEL to cancel and return to the previous screen.

**NOTE:**

- Tap STOP on the pump drive touchscreen to override the remote control device and immediately stop the pump operation. **NOTE:** If locked, the screen will need to be unlocked before the pump operation can be stopped.
- See www.masterflex.com for further information on using analog input remote control and monitoring.

## Saving Analog Input Mode Settings as a New Program

Changes made to mode parameters can be saved as a new program for easier access to frequently used mode settings. **NOTE:** If User Management is enabled only users with authorization can create and modify programs (for further information see "User Management" on page 3-7).

**To save mode parameters to a new program:**

1. If required, edit the Analog Input Mode settings as desired.
2. Tap MODE NAME BANNER to return to the Mode Selection Screen.
3. Tap NEW PROGRAM. **NOTE:** If NEW PROGRAM is not displayed on the Mode Selection Screen tap SCROLL » to view additional pages.
4. Tap ANALOG INPUT. The Analog Input New Program Screen will be displayed with the last settings used in the Analog Input Mode.
5. Tap PROGRAM1. If required, delete the characters using the back arrow on the onscreen keypad and then enter the desired program name (up to 8 characters).
6. Tap CONFIRM to save or DELETE to cancel.

**NOTE:**

- Once saved, new programs are added in alphabetical order to the bottom of the Mode Selection Screen.
- If there are multiple programs tapping SCROLL » will display additional pages.

# MASTERFLEXLIVE™

The REGLO Digital Pump Drive can be monitored through the MasterflexLive™ website using an Ethernet or Wi-Fi connection. MasterflexLive™ can be accessed from any suitable digital device connected to the internet, such as a laptop, tablet, smartphone or desktop computer. See www.masterflex.com for more information.

# CUSTOM PROGRAM MODES

Custom programs allow users to create easily accessible programs for frequently used pump mode settings. **NOTE:** If User Management is enabled only users with authorization can create and modify programs (for further information see "User Management" on page 3-7).

## Adding a New Program: Continuous Mode

**To add a new Continuous Mode program:**

1. Tap NEW PROGRAM from the Mode Selection Screen. The New Program Screen will be displayed. **NOTE:** If NEW PROGRAM is not displayed on the Mode Selection Screen tap SCROLL ⏬ to view additional pages.
2. Tap CONTINUOUS. The Continuous New Program Screen will be displayed.
3. Tap PROGRAM1. If required, delete the characters using the back arrow on the onscreen keypad and then enter the desired program name (up to 8 characters).
4. Select the desired flow rate and flow units:
   a. Tap FLOW RATE to access the Flow Rate Screen.
   b. Tap UNITS to access the Flow Units Screen and select the desired flow unit from the available list.
   c. Tap CONFIRM ✅ to save or CANCEL ❌ to discard changes and return to the Flow Rate Screen.
   d. Tap FLOW and enter the desired flow rate using the onscreen keypad.
   e. Tap CONFIRM ✅ to save or CANCEL ❌ to discard changes and return to the Continuous New Program Screen.
5. Tap SIZE. The Tube Size Screen will be displayed.
   a. Select the desired tube size from the list of available options.
   b. Tap CONFIRM ✅ to save or CANCEL ❌ to discard changes and return to the Continuous New Program Screen.
6. Tap DIRECTION to select either clockwise ↷ or counterclockwise ↶ flow direction.
7. Tap CONFIRM to save or DELETE to discard changes.

**NOTE:**

- Once saved, new programs are added in alphabetical order to the bottom of the Mode Selection Screen.
- If there are multiple programs tapping SCROLL ⏬ will display additional pages.

## Adding a New Program: Time Mode

**To add a new Time Mode program:**

1. Tap NEW PROGRAM from the Mode Selection Screen. The New Program Screen will be displayed. **NOTE:** If NEW PROGRAM is not displayed on the Mode Selection Screen tap SCROLL » to view additional pages.
2. Tap TIME. The Time New Program Screen will be displayed.
3. Tap PROGRAM1. If required, delete the characters using the back arrow on the onscreen keypad and then enter the desired program name (up to 8 characters).
4. Tap ON TIME to set the amount of time for each pump operation. The On Time Edit Screen will be displayed.
   a. Tap HR, MIN, SEC or TENTHS and enter the desired time using the onscreen keypad.
   b. Tap CONFIRM ✓ to save or CANCEL ✕ to discard changes and return to the Time New Program Screen.
5. Tap OFF TIME to set the amount of time the pump will pause between each operation. The Off Time Edit Screen will be displayed. **NOTE:** If the off time is set to 0 (zero) the pump drive will require a start input (from either the touchscreen or a wired input) to start the next dispense.
   a. Tap HR, MIN, SEC or TENTHS and enter the desired time using the onscreen keypad.
   b. Tap CONFIRM ✓ to save or CANCEL ✕ to discard changes and return to the Time New Program Screen.
6. Tap FLOW RATE. The Flow Rate Edit Screen will be displayed.
   a. Tap UNITS to access the Flow Units Screen and select the desired flow unit from the available list.
   b. Tap CONFIRM ✓ to save or CANCEL ✕ to discard changes and return to the previous screen.
   c. Tap FLOW and enter the desired flow rate using the onscreen keypad.
   d. Tap CONFIRM ✓ to save or CANCEL ✕ to discard changes and return to the Time New Program Screen.
7. Tap SIZE. The Tube Size Screen will be displayed.
   a. Select the desired tube size from the list of available options.
   b. Tap CONFIRM ✓ to save or CANCEL ✕ to discard changes and return to the Time New Program Screen.
8. Tap DIRECTION to select either clockwise ↷ or counterclockwise ↶ flow direction.
9. Tap BATCH TOTAL to adjust the number of dispenses in each batch cycle. The Batch Total Screen will be displayed.
   a. Enter the desired number of dispenses in a batch using the onscreen keypad. **NOTE:** If required, tap INFINITE ∞ to select an infinite number of dispense cycles. If infinite is selected, the pump will run continuously.
   b. Tap CONFIRM ✓ to save or CANCEL ✕ to discard changes and return to the Time New Program Screen.
10. Tap CONFIRM to save or DELETE to discard changes.

**NOTE:**

- Once saved, new programs are added in alphabetical order to the bottom of the Mode Selection Screen.

- If there are multiple programs tapping SCROLL ⏬ will display additional pages.

## Adding a New Program: Volume Mode

**To add a new Volume Mode program:**

1. Tap NEW PROGRAM from the Mode Selection Screen. The New Program Screen will be displayed. **NOTE:** If NEW PROGRAM is not displayed on the Mode Selection Screen tap SCROLL ⏬ to view additional pages.
2. Tap VOLUME. The Volume New Program Screen will be displayed.
3. Tap PROGRAM1. If required, delete the characters using the back arrow on the onscreen keypad and then enter the desired program name (up to 8 characters).
4. Tap VOLUME. The Dispense Volume Screen will be displayed.
   a. Tap VOLUME and enter the desired volume using the onscreen keypad. **NOTE:** If the volume of fluid is unknown the pump drive can record fluid dispense volumes (for further information see "Volume Record" on page 3-28).
   b. Tap RAMP UP ◢ to set the time the pump takes to reach full flow rate (between 0 and 60 seconds) using the onscreen keypad.
   c. Tap RAMP DOWN ◣ to set the time the pump takes to stop at the end of each dispense operation (between 0 and 60 seconds) using the onscreen keypad.
   d. Tap CONFIRM ✓ to save or CANCEL ✕ to discard changes and return to the Volume New Program Screen.
5. Tap INTERVAL TIME to set the amount of time the pump will pause between each operation. The Interval Time Screen will be displayed. **NOTE:** If the interval time is set to 0 (zero) the pump drive will require a start input (from either the touchscreen or a wired input) to start the next dispense.
   a. Tap HR, MIN, SEC or TENTHS and enter the desired time using the onscreen keypad.
   b. Tap CONFIRM ✓ to save or CANCEL ✕ to discard changes and return to the Volume New Program Screen.
6. Tap FLOW RATE. The Flow Rate Edit Screen will be displayed.
   a. Tap UNITS to access the Flow Units Screen and select the desired flow unit from the available list.
   b. Tap CONFIRM ✓ to save or CANCEL ✕ to discard changes and return to the previous screen.
   c. Tap FLOW and enter the desired flow rate using the onscreen keypad.
   d. Tap CONFIRM ✓ to save or CANCEL ✕ to discard changes and return to the Volume New Program Screen.
7. Tap SIZE. The Tube Size Screen will be displayed.
   a. Select the desired tube size from the list of available options.
   b. Tap CONFIRM ✓ to save or CANCEL ✕ to discard changes and return to the Volume New Program Screen.
8. Tap DIRECTION to select either clockwise ↷ or counterclockwise ↶ flow direction.
9. Tap BATCH TOTAL to adjust the number of dispenses in each batch cycle. The Batch Total Screen will be displayed.

a. Enter the desired number of dispenses in a batch using the onscreen keypad. **NOTE:** If required, tap INFINITE ∞ to select an infinite number of dispense cycles. If infinite is selected, the pump will run continuously.
b. Tap CONFIRM ✓ to save or CANCEL ✕ to discard changes and return to the Volume New Program Screen.

10. If required, tap ANTI-DRIP. The Anti-Drip Screen will be displayed (for further information see "Anti-Drip" on page 3-27).
    a. Tap ON or OFF to enable or disable the Anti-Drip feature.
    b. If enabled, enter the desired degrees of reverse rotation using the onscreen keypad. **NOTE:** Typical values range from 5 to 45 degrees.
    c. Tap CONFIRM ✓ to save or CANCEL ✕ to discard changes and return to the Volume New Program Screen.
11. Tap CONFIRM to save or DELETE to discard changes.

**NOTE:**

- Once saved, new programs are added in alphabetical order to the bottom of the Mode Selection Screen.
- If there are multiple programs tapping SCROLL » will display additional pages.

## Adding a New Program: Analog Input Mode

**To add a new Analog Mode program:**

1. Tap NEW PROGRAM from the Mode Selection Screen. The New Program Screen will be displayed. **NOTE:** If NEW PROGRAM is not displayed on the Mode Selection Screen tap SCROLL » to view additional pages.
2. Tap ANALOG INPUT. The Analog Input New Program Screen will be displayed.
3. Tap PROGRAM1. If required, delete the characters using the back arrow on the onscreen keypad and then enter the desired program name (up to 8 characters).
4. Tap INPUT. The Analog Type Screen will be displayed.
5. Tap the desired analog type from the available list.
6. If using either ANALOG: VOLTAGE or ANALOG: CURRENT:
    a. Select the desired current or voltage operating range from the available list.
    b. Tap CONFIRM ✓ to save or CANCEL ✕ to cancel and return to the Analog Input New Program Screen.
7. Tap SIZE. The Tube Size Screen will be displayed.
    a. Select the desired tube size from the list of available options.
    b. Tap CONFIRM ✓ to save or CANCEL ✕ to discard changes and return to the Analog Input New Program Screen.
8. Tap DIRECTION to select either clockwise ↷ or counterclockwise ↶ flow direction.
9. Tap CONFIRM to save or DELETE to discard changes.

NOTE:

- Once saved, new programs are added in alphabetical order to the bottom of the Mode Selection Screen.
- If there are multiple programs tapping SCROLL » will display additional pages.

## Using Program Modes

Custom programs will appear in alphabetical order at the bottom of the Mode Selection Screen. If there are multiple programs tapping SCROLL » will display additional pages.

**General Preparation:**

- Confirm the correct tubing has been selected and is properly loaded into the pump drive (for further information see "Loading Tubing" on page 3-9).
- Confirm all fluids and containers are ready.
- Switch the drive on using the power switch located at the rear of the drive. **NOTE:** If User Management is enabled you may be prompted for a username and password (For further information see "User Management" on page 3-7). The touchscreen display will revert to the previously used operation mode.
- Confirm that the tubing has been calibrated by checking that Calibration Complete is displayed on the Program Information ⓘ Screen (for further information see "Tube Calibration" on page 3-14).
- If required, prime the pump before operation (for further information see "Priming the Pump Drive" on page 3-13).

**To use a program:**

1. Select the desired program from the Mode Selection Screen. The Program Run Screen will be displayed.
2. Tap START ▶ to begin the pump drive operation using the displayed program settings.
3. If required, Tap PAUSE ❚❚ or STOP ■ during operation. **NOTE:** The pump cannot be paused during Continuous Mode operation.

NOTE:

- Tap INFORMATION ⓘ to view the selected program's settings.
- Individual settings cannot be edited from the Program Run Screen.

## Editing a Program

**NOTE:** If User Management is enabled only users with authorization can create and modify programs (for further information see "User Management" on page 3-7).

**To edit a program:**

1. Tap EDIT ✎ located next to the desired program name on the Mode Selection Screen (**NOTE:** If there are multiple programs, tap SCROLL » to display additional pages). The Program Edit Screen will be displayed.
2. Edit the settings for the selected mode as desired. For instructions on editing individual mode settings see:
   - "Adding a New Program: Continuous Mode" on page 3-32.
   - "Adding a New Program: Time Mode" on page 3-32.
   - "Adding a New Program: Volume Mode" on page 3-34.

- "Adding a New Program: Analog Input Mode" on page 3-35.
- **NOTE:** Once the individual mode settings have been edited and saved the Program Edit Screen will be displayed.

3. Tap CONFIRM ✓ to save or CANCEL ✕ to discard changes and return to the Mode Selection Screen.

## Deleting a Program

**NOTE:** If User Management is enabled only users with authorization can delete a program (For further information see "User Management" on page 3-7).

**To delete a program:**

1. Tap EDIT ✎ located next to the desired program name on the Mode Selection Screen (**NOTE:** if there are multiple programs tap SCROLL ⌄⌄ to display additional pages). The Program Edit Screen will be displayed.
2. Tap DELETE PROGRAM 🗑.
3. Tap DELETE to delete the program and return to the Mode Selection Screen or CANCEL to return to the previous screen.

# SECTION 4: COMMUNICATION SPECIFICATION

## ETHERNET/IP MODE

In Ethernet/IP mode, the pump can be operated in Continuous, Volume and Time modes. The pump drives are equipped with Ethernet/IP for real time control via a PLC. The .EDS command file is avialable for download on the ODVA website:

https://marketplace.odva.org/products/1923-masterflex?lang=en

### Ethernet/IP Setup

Ensure that your Pump and PLC along with your computer are all connected to the same network. Also, make sure the computer's IP address is within the subnet mask range of the PLC and the pump. The default addressing methods for the pump is DHCP. Static IP address may be assigned through the Ethernet settings menu.






In the device menu, enable the Ethernet/IP feature by toggling to select ON.

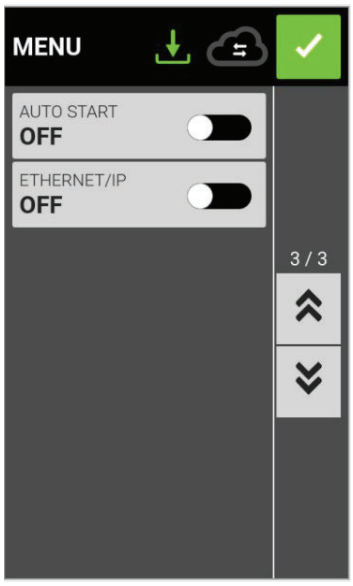


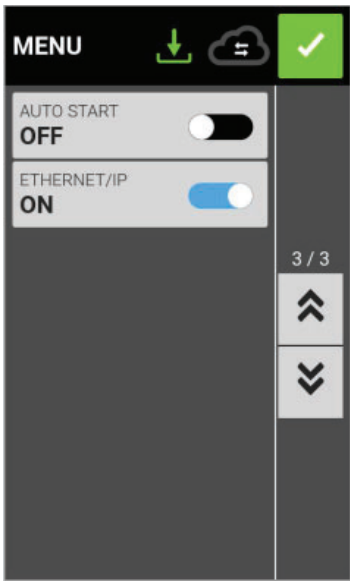


Once enable, the following message appears on the UI. Press Accept on this screen.

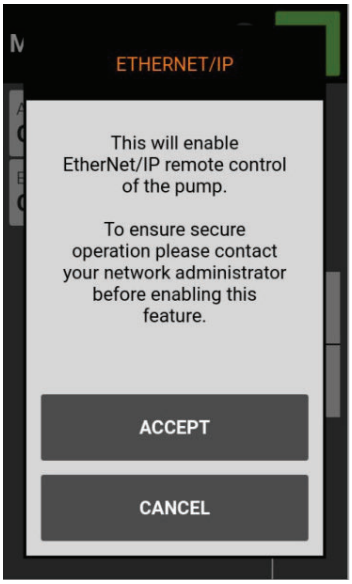

Once the Ethernet/IP has been configured and enabled, you will now be able to view the pump from your PLC. To enable remote control, you must configure the pump from your PLC using the bit "Pump1:O.Toggle_Remote_Local_Control_1_to_0".

**NOTE:**
-The bit changes state from local to remote on a 1 to 0 transition.
-Once enabled, the Ethernet/IP banner will appear at the top of the pump screen.

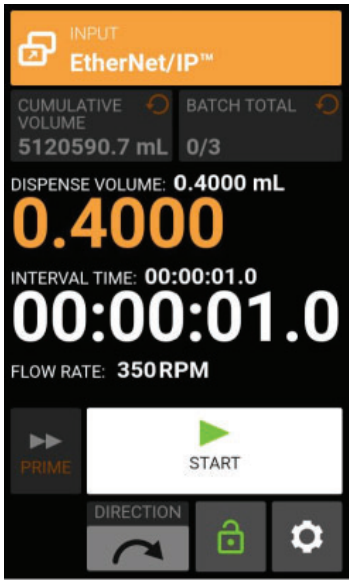


Shows Ethernet/IP active in volume Dispense Mode

# MASTERFLEX ETHERNET/IP

Input data; 56 bytes of input data from pump to master.

| Bytes | Data Type | Description |
|---|---|---|
| 0-3 | 32-Bit INT | Pump Status<br>Bit 0: Status OK<br>Bit 1: Pump Running<br>Bit 2: Dispense Running<br>Bit 3: Tube Uncalibrated<br>Bit 4: Head Open<br>Bit 5: Reserved<br>Bit 6: Flow Direction CCW<br>Bit 7: Remote Control<br>Bit 8-31: Reserved |
| 4 | BYTE | Dispense Mode |
| 5 | BYTE | Tube Size |
| 6 | BYTE | Flow Units |
| 7 | BYTE | Reserved Pad |
| 8 - 11 | FLOAT | Cumulative Volume |
| 12 - 15 | FLOAT | Remaining Dispense Volume |
| 16 - 19 | FLOAT | Remaining Dispense On Seconds |
| 20 - 23 | FLOAT | Remaining Dispense Off Seconds |
| 24 - 27 | 32- bit INT | Batch Count Current |
| 28 - 31 | 32- bit INT | Batch Count Total |
| 32 - 35 | FLOAT | Minimum Flow Rate |
| 36 - 39 | FLOAT | Current Flow Rate |
| 40 - 43 | FLOAT | Maximum Flow Rate |
| 44 - 45 | 16- bit INT | Remaining Dispense On Time Days |
| 46 | BYTE | Remaining Dispense On Time Hours |
| 47 | BYTE | Remaining Dispense On Time Minutes |
| 48 | BYTE | Remaining Dispense On Time Seconds |
| 49 | BYTE | Remaining Dispense On Time Tenths |
| 50 - 51 | 16- bit INT | Remaining Dispense Off Time Days |
| 52 | BYTE | Remaining Dispense Off Time Hours |
| 53 | BYTE | Remaining Dispense Off Time Minutes |
| 54 | BYTE | Remaining Dispense Off Time Seconds |
| 55 | BYTE | Remaining Dispense Off Time Tenths |

Output data; 28 bytes of output data from master to pump.

| Bytes | Data Type | Description |
|---|---|---|
| 0 | BYTE | Pump Control<br>Bit 0: Run/Pause (1 = RUN; 0 = PAUSE)<br>Bit 1: Stop and Reset Dispense (1 to 0 transition)<br>Bit 2: Toggle Remote/Local Control (1 to 0 transition)<br>Bit 3: Clear Cumulative Volume (1 to 0 transition)<br>Bit 4: Reserved<br>Bit 5: Reserved<br>Bit 6: Set Flow Direction CCW (1 = CCW, 0 = CW)<br>Bit 7: Reserved |
| 1 | BYTE | Reserved Pad |
| 2 | BYTE | Reserved Pad |
| 3 | BYTE | Reserved Pad |
| 4 | BYTE | Set Dispense Mode ( 0 = CONT, 1 = TIME, 2 = VOL) |
| 5 | BYTE | Set Tube Size (see Table 4) |
| 6 | BYTE | Set Flow Units (see Table 3) |
| 7 | BYTE | Reserved pad |
| 8 - 11 | FLOAT | Set Flow Rate |
| 12 - 15 | FLOAT | Set Dispense Volume |
| 16 - 19 | FLOAT | Set Dispense On Seconds |
| 20 - 23 | FLOAT | Set Dispense Off Seconds |
| 24 - 27 | 32- bit INT | Set Batch Count Total (0 = infinite) |

Masterflex Flow Units Correlation Table

| Index | 600 & 100 RPM L/S |
|---|---|
| 1 | mL/min |
| 2 | mL/hr |
| 3 | L/min |
| 4 | L/hr |
| 5 | L/day |
| 6 | uL/min |
| 7 | uL/hr |
| 8 | gal/min |
| 9 | gal/hr |
| 10 | gal/day |
| 11 | oz/min |
| 12 | oz/hr |
| 13 | cum/hr |
| 14 | RPM |
| 15 | % |

# SECTION 5: SERVICE & MAINTENANCE

| | |
|---|---|
| ⚠ | **CAUTION:** Replace the power cord only with one of the same type and rating. |
| ⚠ | **CAUTION:** Unplug the pump drive's power cable from the mains power outlet when cleaning or performing maintenance on the drive. |

## FIRMWARE UPDATES

If the REGLO is connected to the internet, updates can be downloaded directly onto the pump drive.
**NOTE:** When new updates are available for your device, the update available icon will be displayed at the top of the Settings Menu Screen.

**To update REGLO:**

1. Tap SETTINGS from any of the mode screens. The Settings Screen will be displayed.
2. SCROLL through the Settings Screen pages to locate DEVICE INFORMATION.
3. Tap DEVICE INFORMATION. The Device Information Screen will be displayed.
4. Tap CHECK FOR UPDATES and follow the onscreen prompts.

If the REGLO is not connected to the internet, updates must be downloaded onto a USB drive before installing onto the pump drive. Visit www.masterflex.com to download the latest updates for your device.

**To install updates from a USB drive:**

1. Insert the USB drive containing the updates into the pump drive's USB port.
2. Tap SETTINGS from any of the mode screens. The Settings Screen will be displayed.
3. SCROLL through the Settings Screen pages to locate DEVICE INFORMATION.
4. Tap DEVICE INFORMATION.
5. Tap CHECK FOR UPDATES and follow the onscreen prompts.

## RESTORE FACTORY SETTINGS

**NOTE:** Factory reset will erase all settings, including custom programs.

**To restore the pump to the original factory defaults:**

1. Tap SETTINGS from any of the mode screens. The Settings Screen will be displayed.
2. SCROLL through the Settings Screen pages to locate DEVICE INFORMATION.
3. Tap DEVICE INFORMATION.
4. Tap FACTORY RESET and follow the onscreen prompts.

# CLEANING THE PUMP DRIVE

| | |
|---|---|
| ⚠ | **CAUTION:** Unplug the pump drive's power cable from the mains power outlet when cleaning or performing maintenance on the drive. |

If required, the pump drive may be wiped clean using a soft cloth lightly moistened with either isopropyl or ethyl alcohol.

**NOTE:**

- Do not use water, chlorine or any perfumed or aromatic cleaning agents on the pump drive.
- Care should be taken with the pump drive's touchscreen to avoid scratching or otherwise damaging the surface. Do not wipe with dry or abrasive material.
- Do not operate the pump drive with water on the surface of the touchscreen.
- Any damage caused by improper cleaning will be the sole responsibility of the customer.

# ACCESSORIES

## REGLO Accessories

To purchase accessories or for further information visit www.masterflex.com. The following accessories are available for the REGLO Digital Pump Drive:

| Description | Part Number |
|---|---|
| Footswitch with 6 ft (1.8 m) cable and DB-25 male connector | 07523-92 |
| DB-25 male connector (no cable, connector only) | 07523-94 |
| Cable assembly (DB-25 male connector and 25 ft (7.9 m) cable with stripped wire ends | 07523-95 |
| Dispensing Wand with 6 ft (1.8 m) cable and DB-25 male connector | 07523-97 |
| Power Supply | 116065 |

## Cassettes

Available cassettes for use with the following REGLO pump drive models: 78018-10, 78018-12, 78018-14, 78018-20, 78018-22, and 78018-24.

| Description | Part Number |
|---|---|
| IS3510A Click'n'go POM-C | 78016-98 |
| IS0649A Pressure Lever POM-C | 07624-64 |
| IS3629A Pressure Lever PVDF | 07624-96 |

## Color-Coded Three-Stop Tubing

Color-Coded Three-Stop Tubing suitable for use with cassettes:

| | Color-Coded Stops | MM ID |
|---|---|---|
|  | ORANGE/BLACK/ORANGE | 0.13 |
|  | ORANGE/RED/ORANGE | 0.19 |
|  | ORANGE/BLUE/ORANGE | 0.25 |
|  | WHITE/BLUE/WHITE | 0.28 |
|  | RED/BLUE/RED | 0.31 |
|  | BROWN/BLUE/BROWN | 0.33 |
|  | BROWN/BLACK/BROWN | 0.36 |
|  | ORANGE/GREEN/ORANGE | 0.38 |
|  | GREEN/YELLOW/GREEN | 0.44 |
|  | ORANGE/YELLOW/ORANGE | 0.51 |
|  | WHITE/YELLOW/WHITE | 0.57 |
|  | ORANGE/WHITE/ORANGE | 0.64 |
|  | BLACK/BLACK/BLACK | 0.76 |
|  | ORANGE/ORANGE/ORANGE | 0.89 |
|  | WHITE/BLACK/WHITE | 0.95 |
| 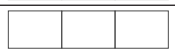 | WHITE/WHITE/WHITE | 1.02 |
|  | WHITE/RED/WHITE | 1.09 |
|  | RED/RED/RED | 1.14 |
|  | RED/GRAY/RED | 1.22 |
|  | GRAY/GRAY/GRAY | 1.33 |
|  | YELLOW/YELLOW/YELLOW | 1.42 |
|  | YELLOW/BLUE/YELLOW | 1.52 |
|  | BLUE/BLUE/BLUE | 1.65 |
|  | BLUE/GREEN/BLUE | 1.75 |
|  | GREEN/GREEN/GREEN | 1.85 |
|  | PURPLE/PURPLE/PURPLE | 2.06 |
|  | PURPLE/BLACK/PURPLE | 2.29 |
|  | PURPLE/ORANGE/PURPLE | 2.54 |
|  | PURPLE/WHITE/PURPLE | 2.79 |
|  | BLACK/WHITE/BLACK | 3.17 |

# MINIFLEX PUMP HEAD REPLACEMENT

If necessary, the Miniflex pump head can be replaced. Contact Technical Assistance (see "Technical Assistance" on page 5-10) to order the appropriate replacement pump head.

| Description: | Part Number |
|---|---|
| Replacement Miniflex Single Channel Pump Head | 77220-20 |
| Replacement Miniflex Dual Channel Pump Head | 77220-30 |

**General preparation and required equipment:**

- Confirm you have the correct replacement pump head.
- Remove the pump head from its packaging and inspect for any obvious signs of damage.
- A Phillips head screwdriver is required to remove the pump head fastening screws.

**To replace the Miniflex pump head:**

1. Turn the pump head handle counterclockwise to raise the upper section of the pump head.
2. Remove the two fastening screws on the pump head's back plate and carefully remove the pump head.
3. Place the new pump head securely onto the Miniflex pump drive.
4. Replace the two fastening screws to secure the new pump head to the drive.
5. Load tubing and run a dispense calibration to confirm the new pump head is operating correctly (for further information see "Loading Tubing" on page 3-9 and "Tube Calibration" on page 3-14).

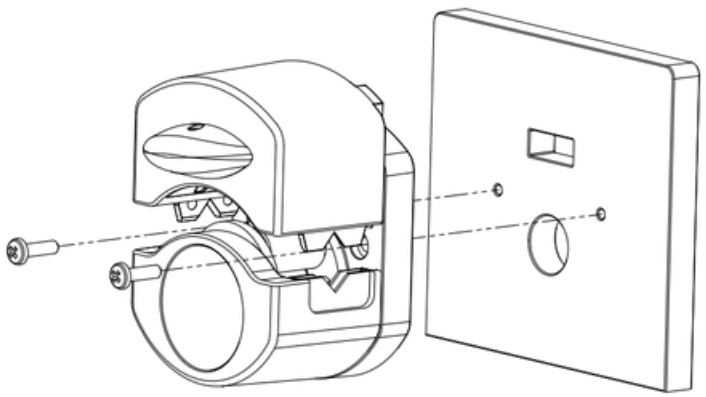

# DB-25 ELECTRICAL CONNECTIONS

| | |
|---|---|
| ⚠ | **CAUTION**: Power must be turned off before connecting the external analog control cable to prevent damage to the drive. |

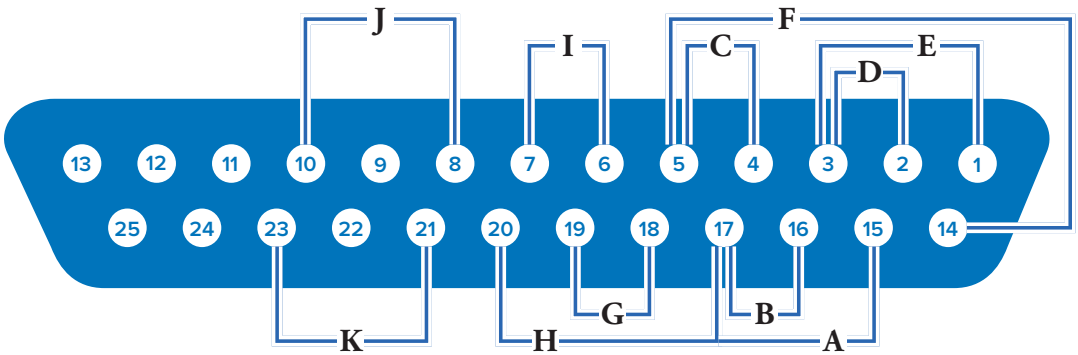


**Contact Arrangements:**

| Pin No. DB-25 | Description | Pin No. DB-25 | Description |
|---|---|---|---|
| 1 | Speed Control Voltage Input (0–10 V) | 14 | Speed Signal Voltage Output (0–10 V) |
| 2 | Speed Control Current Input (0–20 mA) | 15 | Start/Stop Input |
| 3 | Speed Control Input Reference | 16 | CW/CCW Input |
| 4 | Speed Signal Current Output (0–20 mA) | 17 | Start/Stop, CW/CCW, Prime Reference |
| 5 | Speed Signal Output Reference | 18 | Tach Output Reference |
| 6 | Motor Running Relay Output (N.O.) | 19 | Tach Output (Open Collector) |
| 7 | Motor Running Relay Output Common | 20 | Prime Input |
| 8 | Open Head Sensor Relay Output (N.O.) | 21 | General Alarm Relay Output Common |
| 9 | Not Used | 22 | Not Used |
| 10 | Open Head Sensor Relay Output Common | 23 | General Alarm Relay Output (N.O.) |
| 11–13 | Not Used | 24–25 | Not Used |

**Wiring Scheme:**

| | | | |
|---|---|---|---|
| A | Start/Stop | G | Tach Output |
| B | CW/CCW | H | Prime |
| C | Output (0–20 mA, 4–20 mA) | I | Motor Running (N.O.) |
| D | Input (0–20 mA, 4–20 mA) | J | Open Head Sensor (N.O.) |
| E | Input (0–10 V) | K | General Alarm |
| F | Output (0–10 V) | | |

# TROUBLESHOOTING

For further assistance, or for issues that cannot be resolved, see "Technical Assistance" on page 5-10.

| Symptom | Cause | Remedy |
|---|---|---|
| Motor does not rotate.<br>Display does not light. | No power. | 1. Check that the power cord is securely plugged into the drive. |
| | | 2. Check that the power cord is plugged into the mains power outlet and that the power is switched on. |
| | | 3. Check the power cord for any visible signs of damage and replace if defective. |
| Pump does not rotate during analog operation.<br>The display does not light up during analog operation. | Defective analog control or setting error. | 1. Switch the pump drive off. |
| | | 2. Check that the DB-25 connection cable is fully inserted into the drive's port. |
| | | 3. Switch on the pump drive. |
| | | 4. If the motor still does not rotate, select ANALOG INPUT from the Mode Selection Screen and/or the Settings Screen and verify that the settings are correct. |
| | | 5. For further information see "Analog Input Mode" on page 3-29. |
| Weak calibration strength displayed on the calibration strength bar. | Poor calibration volume and/or flow rate. | Calibration accuracy can be improved by using a larger calibration volume and/or altering the flow rate. |
| Touchscreen unresponsive. | Wearing thick latex gloves can make the screen less responsive. | Remove gloves before using the touchscreen. **NOTE:** Consult your company or laboratory safety guidelines before removing any personal protective equipment. |

# ERROR DEFINITIONS

| | |
|---|---|
| **Error #2: No Encoder Pulses** | |
| Description: | The drive's processor has not received expected encoder feedback. |
| Actions: | Drive will stop immediately. Verify load is correct and power cycle drive. If error persists see "Technical Assistance" on page 5-10. |
| **Error #3: Exceeded Average Motor Current Limit** | |
| Description: | Motor is drawing too much current on average for a period of time. |
| Actions: | Drive will stop immediately. Verify that pump head is not binding and that the load is not above recommended maximum load. If error persists see "Technical Assistance" on page 5-10. |
| **Error #4: Exceeded Peak Motor Current** | |
| Description: | Motor is drawing too much current for a short duration of time. |
| Actions: | Drive will stop immediately. Verify that pump head is not binding and that the load is not above recommended maximum load. If error persists see "Technical Assistance" on page 5-10. |
| **Error #5: Communication Watchdog Timeout** | |
| Description: | Internal communications have exceeded allowable time limit. |
| Actions: | Drive will stop immediately. Power cycle the pump drive. If error persists see "Technical Assistance" on page 5-10. |
| **Error #6: Pump Head Opened During Cal** | |
| Description: | The occlusion bed of the pump is no longer in its closed position, or an internal connection is loose or broken. |
| Actions: | Drive will stop immediately. Close pump head. If necessary power cycle the pump drive. If error persists see "Technical Assistance" on page 5-10. |
| **Error #7: Motor Over Temperature** | |
| Description: | The pump's temperature sensor has failed or internal temperatures have exceeded limits. |
| Actions: | Drive will stop immediately. If necessary remove drive from high ambient temperature, decrease load, and verify that there is free airflow around the drive. If error persists see "Technical Assistance" on page 5-10. |
| **Error #8: Motor Direction – Leads Incorrect** | |
| Description: | The motor wires are reversed. |
| Actions: | Drive will stop immediately. Power cycle the pump drive. If error persists see "Technical Assistance" on page 5-10. |
| **Error #9: Over Speed** | |
| Description: | The drive has exceeded commanded speed value. |
| Actions: | Drive will stop immediately. Verify load is correct and power cycle the pump drive. If error persists see "Technical Assistance" on page 5-10. |
| **Error #10: Encoder Commutation** | |
| Description: | The drive's internal speed sensor is not providing a consistent output. |
| Actions: | Drive will stop immediately. Verify load is correct and power cycle the pump drive. If error persists see "Technical Assistance" on page 5-10. |
| **Error #11: Cal: Bad Checksum in EEPROM** | |
| Description: | Bad EEPROM checksum for Factory Cal. |
| Actions: | Error will be cleared after 10 seconds and parameters will be reset to default values. If error persists see "Technical Assistance" on page 5-10. |

# SPECIFICATIONS

| | | | |
|---|---|---|---|
| **OUTPUT** | | | |
| | **Speed:** | 160 RPM Models | 0.15 to 160 RPM |
| | | 350 RPM Models | 0.18 to 350 RPM |
| | **Torque Output, Max Continuous:** | All Models | 90 oz-in |
| | **Speed Regulation:** | All Models | Line ±0.1% F.S. |
| | | | Load ±0.1% F.S. |
| | | | Drift ±0.1% F.S. |
| | **Display:** | All Models | 800 x 480 LCD w/ LED Backlight |
| | **Outputs:** | All Models | Voltage speed output (0-10 VDC @ 1 kΩ min) |
| | | | Current speed output (4-20 mA @ 0-600 Ω) |
| | | | Motor running relay (Closed when running, 1 A max @ 24 VDC) |
| | | | General alarm relay (Closed when error is displayed, 1 A @ 24 VDC) |
| | | | Open head relay (Closed when activated, 1 A @ 24 VDC) |
| | | 160 RPM Models | Tach output (2 – 1600 Hz, 50% Duty Cycle, 10 Hz per RPM) |
| | | 350 RPM Models | Tach output (2 – 3500 Hz, 50% Duty Cycle, 10 Hz per RPM) |
| **INPUT** | | | |
| | **Supply Voltage Limits:** | All Models | 90 to 260 Vrms @ 50/60 Hz (Universal Input) |
| | **Max Current:** | All Models | 1.3 A @ 115 VAC; 0.6 A @ 230 VAC |
| | **Inputs:** | All Models | Start/Stop, Prime, CW/CCW (Contact closure) |
| | | | Current input (0-20 mA @ 249 Ω; ± 50 V common mode range) |
| | | | Voltage input (0-10 VDC @ 10 kΩ; ± 50 V common mode range) |
| | | | RJ45 Ethernet<br>USB, Type A<br>(5 VDC @ 0.5 A) |

| | | | |
|---|---|---|---|
| **CONSTRUCTION** | | | |
| | **Dimensions (L x W x H):** | Drive Only | 7.62" x 5.75" x 6.31"<br>(194 mm x 146 mm x 160 mm) |
| | **Weight:** | Drive Only | 5.74 lbs. (2.60 kg) |
| | **Enclosure Rating:** | All Models | IP31 per IEC 60529 |
| **ENVIRONMENT** | | | |
| | **Operating Temperature:** | All Models | 0 °C to 40 °C (32 °F to 104 °F) |
| | **Storage Temperature:** | All Models | -25 °C to 65 °C (-13 °F to 149 °F) |
| | **Humidity (Non-Condensing):** | All models | 10% to 90% |
| | **Altitude:** | All Models | Less than 2000 m |
| | **Pollution Degree:** | All models | Pollution Degree 2 (Indoor use, lab, office) |
| | **Chemical Resistance:** | All Models | Exposed material is painted aluminum and ABS plastic |
| **COMPLIANCE** | | | |
| | | All Models | UL 61010-1 US/CAN<br>For CE mark:<br>EN61010-1, Low Voltage Directive<br>EN61326-1, EMC Directive<br>EN50581, RoHS Directive |
| | | Pump Head | EN809, Machinery Directive |

# TECHNICAL ASSISTANCE

If you have any questions about the use of this product contact the manufacturer or authorized seller.

# PRODUCT RETURN

Like all pumps, the REGLO pump drive contains components that will wear over a period of time. To limit charges and delays contact the seller or manufacturer for authorization and shipping instructions before returning the product, either within or outside of the warranty period. When returning the product please state the reason for the return. For your protection, pack the product carefully and insure it against possible damage or loss. Any damages resulting from improper packaging are your responsibility.

# WARRANTY

Visit www.masterflex.com for warranty information.

# DISPOSAL

Please retain packaging materials until the product warranty ends. Afterwards please discard of any packaging materials in an environmentally friendly manner and according to local regulations.

Once the useful life of the product has ended, please ensure proper disposal according to local laws. Plastic and electronic components should be disposed of at a recycling facility. Please refer to local regulations regarding proper disposal.



**US & Canada only**
Toll Free 1-800-MASTERFLEX | 1-800-637-3739
**Outside US & Canada**
1-847-381-7050

***EN809 manufactured by:**
Masterflex LLC
28W092 Commercial Avenue, Barrington, IL 60010
masterflex.tech @ avantorsciences.com
www.avantorsciences.com/masterflex