Solids Handling Pedestal Pumps

Bronze Straight Pedestal



- **Available in: 300 Series Investment Cast Stainless Steel, Stainless Steel Fitted Cast Iron or Cast Bronze Construction (See Pricebook for Specific Model Availability)**
- **Mechanical Seal**
  - **Stainless Steel** **Viton®**
  - **Cast Bronze** **Viton®**
  - **Cast Iron** **Buna-N**
  - **Optional** **Silicon Carbide**
- **3/4˝ to 1-1/4˝ NPT Suction Port Sizes**
- **1/2˝ to 1˝ NPT Discharge Ports**
- **Maximum Temperature**
  - **Buna-N 180° F**
  - **Viton® 200° F**
- **Maximum 4000 RPM**
- **General Service Models 3682, 3694 & 3704 for Low Pressure Applications**

Performance of Straight Centrifugal Pedestal Pumps

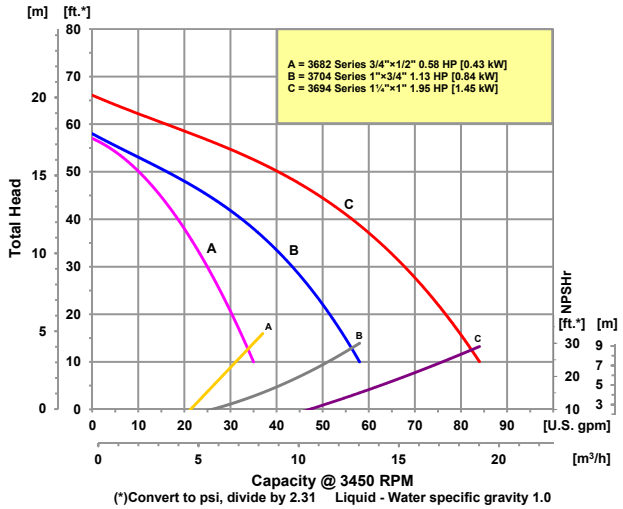

AMT Straight Centrifugal Pedestal pumps are designed for continuous duty OEM, Industrial/ Commercial and processing applications including: circulation, chemical processing, liquid transfer, heating and cooling. The high head models are ideal for sprinkler systems and pressure boosting. Pumps are designed to handle liquids with solids contents or dissolved solids and debris up to 7% of liquid volume.

These units are available in a variety of construction and seal materials. Pull-from-the-rear design permits easy servicing without disturbing any piping. Pedestals feature CNC machined shafts with sealed ball bearings.

AMT® A Gorman-Rupp Company
400 Spring Street • Royersford, PA 19468 USA
www.amtpump.com • 888-amt-pump (268-7867)

For use with nonflammable liquids compatible with pump component materials. Viton® and Teflon® are registered trademarks of E. I. Dupont.

Pump Dimensional & Specification Data

Model	A	B	C	D	E	F	G	J	K	M (Dia.)	L	W	H
GENERAL SERVICE MODELS													
3694	1.5 [3.8]	2.0 [5.0]	N/A	3.2 [8.1]	1.3 [3.3]	0.3 [0.7]	0.3 [0.7]	3.0 [7.6]	1.3 [3.3]	5/8	6.7 [17.0]	6.4 [16.3]	5.7 [14.4]
3704	1.5 [3.8]	2.1 [5.3]	N/A	3.2 [8.1]	1.4 [3.5]	0.3 [0.7]	0.3 [0.7]	3.0 [7.6]	1.3 [3.3]	5/8	6.7 [17.0]	6.4 [16.3]	5.6 [14.2]
3682	1.5 [3.8]	1.9 [4.8]	N/A	3.2 [8.1]	1.4 [3.5]	0.3 [0.7]	0.3 [0.7]	3.0 [7.6]	1.3 [3.3]	5/8	6.6 [16.7]	5.7 [14.6]	5.1 [12.9]

Model ‡	Curve	SUC*	DIS*	Minimum BHP Required @ 3450 RPM	‡ Ship Wt. (Lbs.)
3694	C	1¼	1	1.95	13
3704	B	1	3/4	1.13	11
3682	A	3/4	1/2	0.58	10

(*) Standard NPT (Female) pipe thread.
NOTE: Dimensions are in inches (centimeters) and have a tolerance of ± 1/8".

‡ When Ordering Add the Correct (-9x) Suffix to Model Number Indicating Material Selection (Ex. 3682-95).

XCI (-95) Cast Iron Construction with Stainless Steel Impeller and Buna-N Seals

XB (-97) Cast Bronze Casing with Stainless Steel Impeller, Pedestal with Viton® Seals

XSS (-98) Cast Stainless Steel Construction with Viton® Seals

(Check Pricebook for Availability on Models)

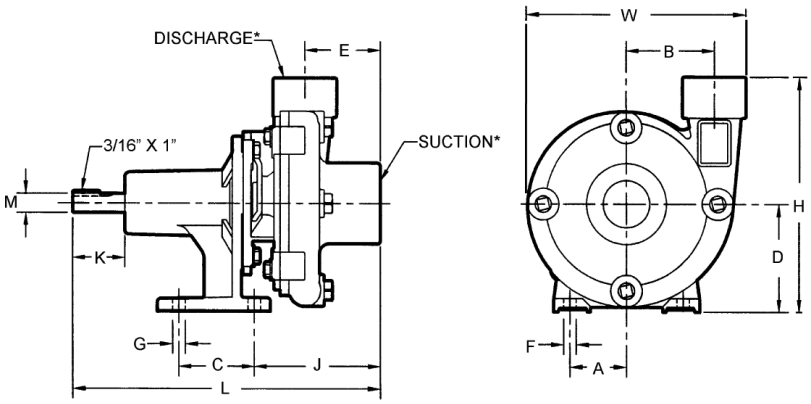

Standard Features

- 300 Series Investment Cast Stainless Steel, Stainless Steel Fitted Cast Iron or Cast Bronze Construction (See Pricebook for Specific Model Availability)
- Mechanical Seal:
  - Cast Iron — Buna-N
  - Stainless Steel — Viton®
  - Cast Bronze — Viton®
  - Optional — Silicon Carbide
- Maximum Temperature:
  - Buna-N — 180° F
  - Viton® — 200° F
- 3/4" to 1-1/4" NPT Suction Ports
- 1/2" to 1" NPT Discharge Ports
- Maximum Working Pressure:
  - General Service 75 PSI
- Self-cleaning Impeller on General Service Models
- Maximum Flow 84 GPM
- Maximum Head 76 Ft.
- QSP – Quick Ship Pump for Many Models

The Gorman-Rupp Company reserves the right to discontinue any model or change specifications at any time without incurring any obligation.
©2012 American Machine and Tool Company. All rights reserved.