CALL TOLL FREE 877-742-2878 FOR SALES AND SUPPORT
Return to BurtProcess.com

ARO®

PISTON PUMPS AND PACKAGES

PRODUCT OVERVIEW



Ingersoll Rand

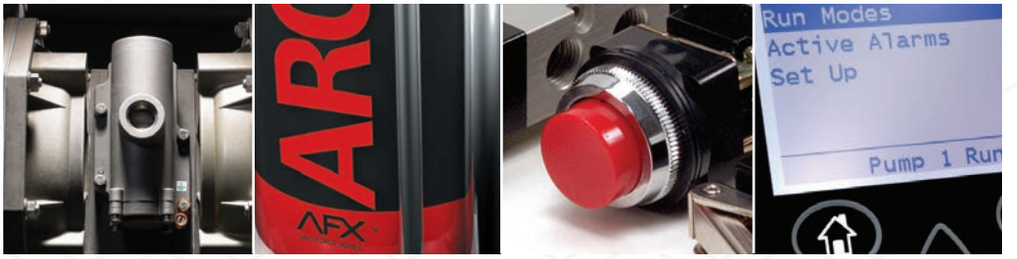

ARO® is a worldwide manufacturer of fluid management products that are skillfully engineered to deliver performance and serviceability, allowing success to flow freely in our customers' businesses. That's why ARO is fluid intelligence—the smart choice in fluid management products for industrial operations. With over an 85-year legacy of premier product performance and service excellence, ARO provides fluid management equipment for customers and industries around the globe, including chemical, manufacturing, energy, pharmaceutical, mining and more.

ARO has the right product to meet our customers' specific needs. We offer air-operated diaphragm pumps, piston pumps and packages, filters, regulators, and lubricators (FRLs), lubrication equipment, and pneumatic valves and cylinders.

Product and Technical Support

Every ARO product is backed by a highly qualified team of engineers dedicated to designing products that promote success around the world. Because ARO products are built to be as simple as they are smart, customers benefit from efficient operation and high performance for the best total cost of ownership.

A0t ARO we make success flow

Table of Contents

- Piston Pump Introduction 4
- Piston Pump Packages 6
- Motor Technology Features 8
- Lower Pump End Features 10
- Pump-to-Viscosity Guide 12
- Pump and Packages Configuration 14
- Warranty and Emissions 15

Industry expertise merged with proven piston pump technologies.

For over 85 years, the ARO® Fluid Products business of Ingersoll Rand has developed partnerships with more than 200 original equipment manufacturers and distributors, enabling us to better focus on the unique pumping needs of many industries. It's a strategic merger of our partners' application expertise, along with our decades-long legacy of designing and building outstanding piston pumps.

Simply Versatile

ARO piston pumps are capable of handling a wide variety of viscous fluids. With a wide selection of pressure ratios and displacement rates available, ARO offers a number of piston pump packages that may meet your specific application needs. Offered in multiple configurations, including single-post, two-post and heavy-duty two-post, our piston pump packages ensure we have the right solutions for the following applications as well as many others.



Our partnerships create unmatched application expertise in:

- Finishing
- Coatings
- Sealants and adhesives
- Lubrication
- Bulk material transfer and circulation
- High-pressure cleaning

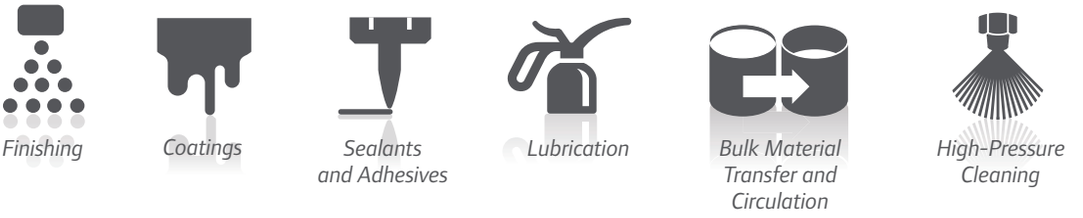

Finishing *Coatings* *Sealants and Adhesives* *Lubrication* *Bulk Material Transfer and Circulation* *High-Pressure Cleaning*

Pumping fundamentals

The versatility of piston pumps is unmatched as they are used in a seemingly endless array of applications and pumping solutions. With this in mind, it is important to remember these basic pumping fundamentals to help ensure the right product is selected for your unique application.

Piston Pump Applications

Piston pumps are used in a wide variety of fluid handling applications. The majority of these can be broken down into four different categories:

Transfer

Moving a low-to-medium viscosity fluid from one location to another. 2-ball and 4-ball style pumps are the most frequently used in transfer applications.

Extrusion

Involves using a piston pump to apply medium-to-high viscosity materials. Typical extrusion applications require accessories like rams and fluid regulators to meet customer requirements. Chop-check and 2-ball pumps are used in extrusion applications.

Coating

This involves application of material by either spray or dipping. Coating applications use 2-ball and 4-ball pumps.

Measuring/Dispense

Measuring and dispense involves the delivery of a specified quantity of fluid on a repetitive basis. Measuring and dispense applications use 2-ball, 4-ball and chop-check pumps.

Ratio

Ratio is the effective area differential between the air motor piston and the lower end plunger rod. An 11:1 ratio indicates the pump air motor piston has 11 times the effective area of the fluid handling piston.

Higher ratio pumps produce higher fluid pressures which allows them to either move higher viscosity fluids or transfer fluids longer distances.

A

At 100 psi of inlet pressure, an 11:1 pump produces 1,100 psi of fluid outlet pressure.

B

A 23:1 pump would produce 2,300 psi of fluid outlet pressure, given the same air inlet.

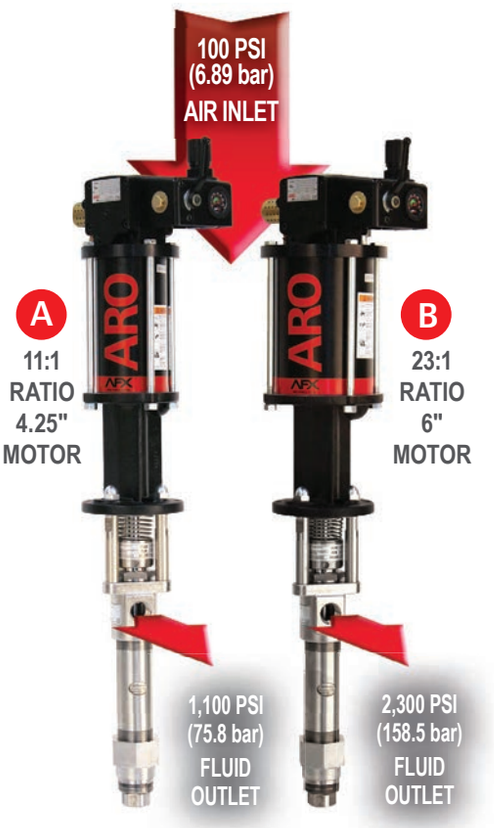

Materials of Construction

Pump components are constructed of different materials to ensure the pump is best suited for a particular application.

Lower Pump End Component Options

Stainless Steel – Used with corrosive fluids and water-borne materials. Stainless steel is corrosion resistant. It can be heat-treated, hard chrome-plated or Ultra-Coated to improve abrasion resistance.

Carbon Steel – Provides excellent abrasion resistance. It can be heat-treated or hard chrome-plated. Not suited for water-borne fluids and corrosive materials, as it will rust and deteriorate.

Packing Seal Options

Packing seals are used to seal movement of the plunger rod, both in the throat seal and piston seal areas of the pump. They are made of different materials to ensure chemical and material compatibility to maximize service life.



UHMW-PE (Ultra-High Molecular Weight Polyethylene) – An all-purpose packing material that provides excellent abrasion resistance. Commonly used with inks, acids, and some solvents.



PTFE Compatible with all fluids. Provides excellent corrosion resistance but minimal abrasion resistance. Commonly used with corrosive chemicals, ketone, acids, and room-temperature vulcanizing (RTV) materials.



Leather Commonly used in combination with UHMW-PE packings for excellent sealing and abrasion resistance. UHMW-PE and leather are most often used when pumping inks.



Staggered Combining packing seals made of different material combinations can often maximize service life by utilizing the strengths of both materials.

Paired to perform

The right package for your application

Most applications require more than just a pump. ARO® piston pumps offer a wide range of transfer, extrusion, and finishing packages that not only enhance your productivity, but also simplify the ordering process. We provide you with the right configuration of air motor, piston pump, mount, follower, controls, and down-stream accessories; you simply attach an air hose, connect the package to the fluid source, attach a fluid outlet line and you're good to go.



1 Pump

Coupled with our air motor, we can configure our 2-ball, 4-ball, and chop-check pumps to be optimized for your application.

2 Air motor

Available in seven sizes, our air motors provide power and reciprocating motion to our pumps. The larger the air motor, the more power it delivers.

3 Ram

Our single-post, two-post, and cart-mounted systems are used to pump material out of containers. They enable quick container changeover, minimizing process interruptions. The 3.25" cylinders deliver best-in-class down force, improving material supply to the pump.

4 Follower plate

Connected to the pump and the ram, follower plates feed material into the pump from a variety of container sizes. In addition to improving pump performance, follower plates protect your material and reduce waste.

Application packages

FINISHING, COATINGS, SEALANTS, INKS, AND ADHESIVES



TPX Package
Features a two-post ram, pump, follower plate and controls designed for high-viscosity applications when maximum down force is required. Available for 5 GAL (19L) - and 55-GAL (208L) containers.



SPX Package
Ideal for medium- to heavy-viscosity extrusion, ARO Fluid Product's single-post ram with pump, follower plate, and controls allows for easy container changeover while providing industry-leading down force during operation. Available for 5 GAL (19L) containers.



CMX Package
Popular in airless spray applications, these packages feature a high-pressure pump, air control, material filter, and suction hose — all mounted on a heavy-duty cart. Available for 5 GAL (19L) containers.



CLX Package
When portability is required for light- to medium-viscosity (less than 50K cPs) extrusion, our cart-mounted lift with follower plate allows for easy container changeover. Available for 5 GAL (19L) containers.

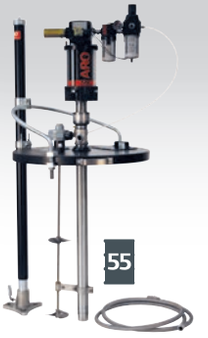

ALX Package
Ideal for finishing and adhesive applications where you need to keep fluid mixed. Includes lift, drum cover, agitator, and air controls. Available for 55-GAL (208L) containers.

LUBRICATION



DCX Package
The ARO line of lubrication pumps can be configured with a drum cover and air controls for the transfer and supply of oil and grease. Available for 16 GAL (61L) and 55-GAL (208L) containers.



DMX Package
Same as DCX but this has a bung adapter to thread into container rather than a drum cover. Available for 55-GAL (208L) container.

BULK MATERIAL TRANSFER / CIRCULATION



FMX Package
Ideal for fluid transfer from tanks and piping systems, pumps come with a floor-mountable stand to connect to inlet piping.



WMX Package
The compact design of our piston pumps make them ideal for mounting on walls or appropriate structures. This package includes the pump and bracket for vertical mounting on structures.

HIGH-PRESSURE CLEANING



WPX
When it is time to clean up, our wash pump is a great high-power cleaning solution. Includes pump, wall mount bracket, suction tube assembly, and spray wand. Available for 5 GAL (19L) and 55-GAL (208L) containers.

Recommended accesssories



Fluid Regulators



Material Filters



Extrusion Guns



Lubrication Meters



Siphon Hoses



Wet Sol® Packing Lubricants



ARO Stop Overrun Controls



High-Output Mufflers



Filter Regulators

ARO Piston Pump Motor Technologies

N-Series / Thunder Series Motors

For Lubrication and Light-Industrial Applications

ARO N-Series/Thunder Series motors deliver unmatched industrial strength and performance in a small, compact pump and package configurations. Offered in 2" and 3" sizes, these motors are the perfect choice for lubrication and light-industrial applications when paired with a lower pump end. With ratios ranging from 2:1 to 50:1, the ARO N-Series/ Thunder Series pumps are versatile enough to meet the requirements of the most demanding applications.

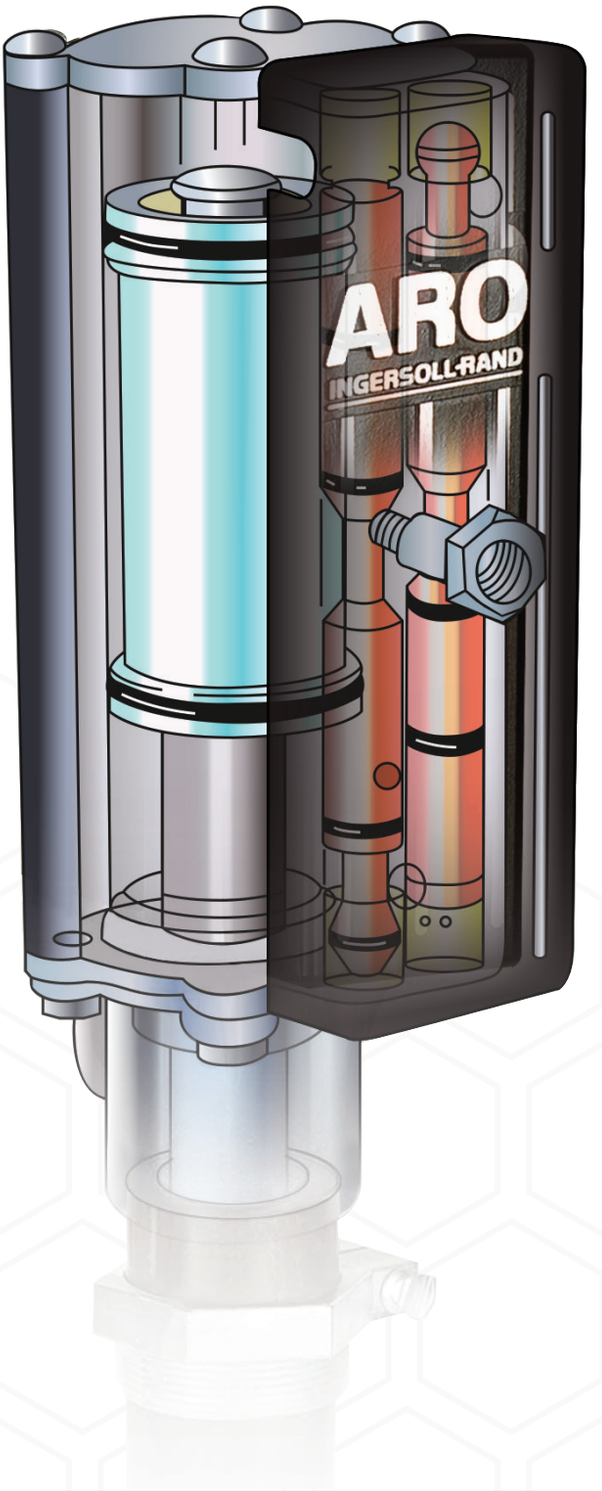

Features and benefits

- Motor's patented design improves flow, reduces pulsation, and extends service life
- Offers simple self-service maintenance due to advanced design with 50% fewer parts
  - Motor has only 3 moving parts
- Reduces service time, due to in-line service design with no special tools required
- Features stall-free, ice-free air motor with tough, durable housing
  - Lubrication-free operation
  - Intergrated muffler design reduces noise levels
- Unbalanced air valves promote consistent operation and performance
- 3" stroke length
- Cycle-count options available on select models

AFX™ ARO Force Series

For Industrial Lubrication and Industrial Applications

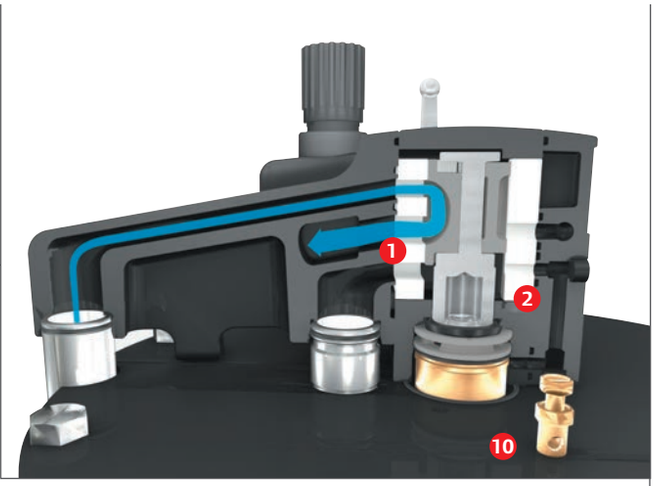

*Cut-away view of AFX™ pump valve block featuring our innovative **Progressive Exhaust**™ and **True Link Valve**™ technology*



AFX™ reliability features:

1 **Progressive Exhaust™** Parabolic valve geometry and cascading expansion chambers practically eliminate variability in pump performance caused by changing environmental conditions or icing.

2 **True Link Valve™** Our pulse profile is virtually undetectable. Highly polished ceramic valve plates and PTFE-filled acetal valve components are directly linked to the drive piston, creating an industry-leading changeover time of less than one-tenth of a second. There are no springs to fail or consume energy. Patent pending.

3 **Fiber-wound, conductive composite cylinder** has superior seal wear created by the epoxy surface; metal cylinders can seize with piston if seal failure occurs.

4 **Lubrication-free operation** saves you the cost of lubricating your pump.

5 **6" stroke** results in improved performance for your process with high displacement per stroke, improved pulse profile, and reliability due to fewer switch-overs per cycle.

Hydraulic motors also available for select models.

AFX™ designed simplicity features:

6 **Universal valve block** reduces downtime since it's easily serviced and interchangeable between all motor sizes.

7 **Universal lower end pump connection** permits interchangeability between various sized air motors and pump ratios — you may upgrade the motor without buying a new pump.

8 **Compact design** makes it easier to incorporate our pumps into OEM equipment.

9 **Actuation control ports** provide access for pneumatic logic signal controls. Patent pending.

AFX™ safety features:

10 **Groundability** provides safe operation where static charge build-up and sparking is a concern. Our groundable pumps are ATEX-compliant.

11 **Optional integrated ball valve regulator** enhances safety by enabling air pressure to be set using a regulator, to be checked visually by reading the gauge, and to be dumped manually; also completely eliminates need for installation and expense of extra plumbing, regulators, or valves. Patent pending.

Simply better pumps

ARO Lower Pump End Technology

Whether your application requires a 2-ball, 4-ball, or chop-check piston pump, with ARO you get a pump that's better engineered, from the inside out. We offer design features and performance enhancements that ensure your pump is as durable and dependable as possible — maximizing output and minimizing downtime for a long time to come.

Pump selection made simple

With an ARO piston pump, you can be assured of getting reliable equipment with the least amount of effort, calculation, or hassle on your part. There are basically four factors to take into consideration when selecting the right configuration for your application:

- Type of fluid
- Viscosity or thickness
- Required flow rate
- Required output pressure

Pump selection at a glance

Knowing fluid viscosity and flow rates makes it easier to choose the right pump for your application. Not sure what size air motor or piston pump you need? No problem. You can find out by calling ARO Technical Support and working directly with our expert pump consultants, or by visiting our website to access specific pump performance data. Either way, you'll be sure to get a motor and pump package that operates efficiently, reliably, and safely.

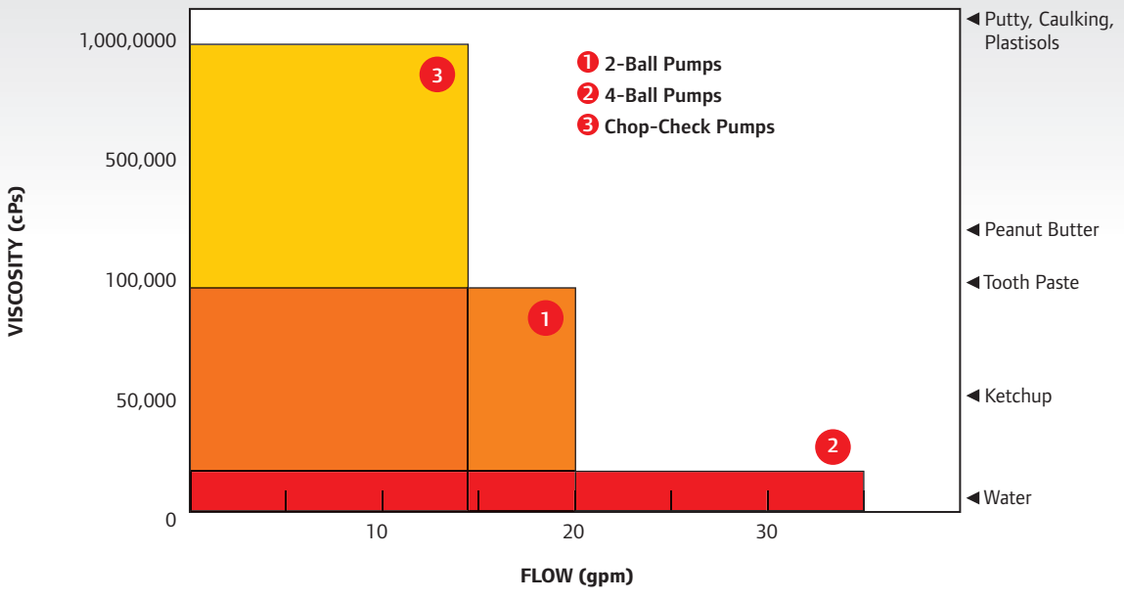

Best-in-class output

- Our 6" stroke delivers best-in-class displacement per cycle, delivering better flow rate, better output, and less fatigue on parts.

Easy serviceability

- Plungers and packings are easily accessible, minimizing downtime.
- Pump packings on the lower pumps are adjustable, featuring a wave spring and guide arrangement.
- Parts are available in convenient service kits so you have the right parts at the right time.

Superior performance with abrasive fluids

- Plunger rods and cylinder tubes feature the **exclusive ARO® ceramic ultra-coating**, extending service life up to twice as long. Available on 2-ball. Standard on 4-ball.
- Available in affordable **high-grade stainless-steel** construction.
- Electro-polished and passivated for material compatibility and corrosion-free operation.
- **Eight packing options** are available, including ultra-high molecular weight polyethylene (UHMW-PE), for even better material compatibility and excellent abrasion resistance.
- **Chrome-plated stainless steel plungers** for superior resistance to rust and corrosion.

2-ball pumps

Spray

Extrusion

Transfer & Supply

Materials
- Oils
- Coatings
- Paint
- Chemicals



2-ball pumps are among the most versatile in the ARO line. They are capable of handling applications from simple transfer to the extrusion of low- to medium- viscosity materials up to 100,000 centipoise (cPs) with fluid delivery up to 18.1 gpm (68.6 L/min).

4-ball pumps

Transfer & Supply

Materials
- Paint
- Chemicals
- Varnishes
- Enamels
- Lacquers

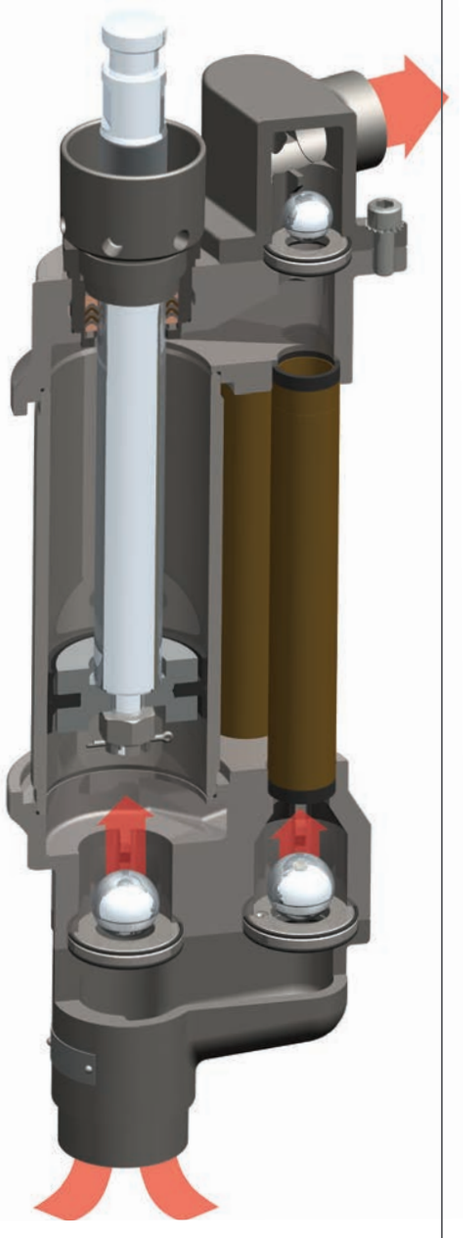

ARO-Force 4-ball piston pumps are designed to transfer high volumes of low- and medium-viscosity fluids up to 12,500 cPs with fluid delivery up to 32.8 gpm (124.0 L/min), depending on the application. A common use involves circulating fluid from the original container, to the point of use, and then back.

Chop-check pumps

Extrusion

Transfer & Supply

Lubrication

Materials
- Caulking
- Heavy lubricants
- Mastics
- Sealants
- Inks
- Grease



The heavy-hitters of the line, ARO chop-check pumps are designed to move medium- to high- viscosity fluids ranging from 15,000 to more than 1,000,000 cPs, and at delivery rates up to 12.2 gpm (46.3 L/min).

Pump-to-Fluid Viscosity Guide

Considerations: The chart should only be used as a guide, and not as an absolute solution to a pump application. It does not take into consideration pressure losses due to sizes and lengths of hoses, piping runs, dispensing valves, hose swivels, elevations, and other restriction factors.

Flow (gpm)	Maximum Delivery Rate gpm (L/min)	Ratio	Fluid Pressure Range psi (bar)	Pump Model Number	Material of Construction	Lower End Type		500 cPs	1,000 cPs	5,000 cPs	7,500 cPs
0 - 2	0.38 (1.4)	28:1	0 - 4200 (0 - 289.6)	NM2328A-11-X11	Stainless Steel	2-Ball		Siphon			
	0.5 (1.9)	22:1	0 - 3300 (0 - 227.5)	NM2322E-XX-P4X	Carbon Steel	Chop-Check				Flooded Inlet	
	0.5 (1.9)	22:1	0 - 3300 (0 - 227.5)	NM2322F-XX-P4X	Stainless Steel	Chop-Check				Flooded Inlet	
	0.74 (2.8)	43:1	0 - 6549 (0 - 451.5)	AF0443S21XXXX	Carbon Steel	Chop-Check				Flooded Inlet	
	0.74 (2.8)	43:1	0 - 6549 (0 - 451.5)	AF0443T21XXXX	Stainless Steel	Chop-Check				Flooded Inlet	
	0.74 (2.8)	43:1	0 - 6549 (0 - 451.5)	AF0443S71XXXX	Carbon Steel	Chop-Check				Flooded Inlet	
	1.2 (4.5)	18:1	0 - 2700 (0 - 186.2)	NM2318B-13-C43	Stainless Steel	2-Ball		Siphon			
	1.3 (4.9)	30:1	900 - 4629 (62.1 - 319.2)	AF0430G11XXXX	Stainless Steel	2-Ball		Siphon			
	1.3 (4.9)	60:1	1800 - 6172 (124.1 - 425.5)	AF0660G11XXXX	Stainless Steel	2-Ball		Siphon			
	1.3 (4.9)	65:1	0 - 7475 (0 - 515.5)	AF0665S11XXXX	Carbon Steel	Chop-Check				Flooded Inlet	
	1.5 (5.7)	3.6:1 Hyd	180 - 4320 (12.4 - 297.9)	650935-C43-C	Carbon Steel	Chop-Check				Flooded Inlet	
	1.6 (6.1)	3.3:1 Hyd	165 - 3394 (11.4 - 234)	650944-C43-B	Stainless Steel	2-Ball		Siphon			
	1.8 (6.8)	23:1	0 - 3690 (0 - 254.4)	AF0423S11XXXX	Carbon Steel	Chop-Check				Flooded Inlet	
	1.8 (6.8)	46:1	0 - 7485 (0 - 516.1)	AF0646S11XXXX	Carbon Steel	Chop-Check				Flooded Inlet	
	1.9 (7.2)	22:1	660 - 3412 (45.5 - 235.3)	AF0422G11XXXX	Stainless Steel	2-Ball		Siphon			
	1.9 (7.2)	45:1	1350 - 5459 (93.1 - 376.4)	AF0645G11XXXX	Stainless Steel	2-Ball		Siphon			
0 - 4	2.7 (10.2)	2:1 Hyd	100 - 2400 (6.9 - 165.5)	650934-XXX-C	Carbon Steel	Chop-Check				Flooded Inlet	
	2.9 (11)	9:1	0 - 1350 (0 - 93.1)	AF0409C51XXXX	Stainless Steel	2-Ball				Flooded Inlet	
	2.8 (10.6)	9:1	0 - 1350 (0 - 93.1)	AF0409AX1XX24-02	Carbon Steel	2-Ball				Flooded Inlet	
	2.9 (11)	9:1	0 - 1350 (0 - 93.1)	AF0409C11XXXX	Stainless Steel	2-Ball		Siphon			
	3.1 (11.7)	0.58:1 Hyd	85 - 2054 (5.9 - 141.6)	650943-XXX-B	Stainless Steel	2-Ball		Siphon			
	3.1 (11.7)	1.7:1 Hyd	85 - 2040 (5.9 - 140.7)	650945-XXX-B	Stainless Steel	2-Ball		Siphon			
	3.2 (12.1)	23:1	0 - 4215 (0 - 290.6)	AF0623S11XXXX	Carbon Steel	Chop-Check				Flooded Inlet	
	3.2 (12.1)	12:1	0 - 2085 (0 - 143.8)	AF0412S11XXXX	Carbon Steel	Chop-Check				Flooded Inlet	
	3.7 (14)	11:1	330 - 1747 (22.8 - 120.5)	AF0411G11XXXX	Stainless Steel	2-Ball		Siphon		Flooded Inlet	
	3.7 (14)	23:1	690 - 3495 (47.6 - 241)	AF0623G11XXXX	Stainless Steel	2-Ball		Siphon		Flooded Inlet	
	3.7 (14)	40:1	1200 - 4697 (82.7 - 323.9)	AF0840G11XXXX	Stainless Steel	2-Ball		Siphon			
	3.8 (14.4)	44:1	1320 - 3964 (91 - 273.3)	AF0844S11XXXX	Carbon Steel	Chop-Check				Flooded Inlet	
0 - 10	4.1 (15.5)	2:1	0 - 300 (0 - 20.7)	650110-C	Carbon Steel	2-Ball		Siphon			
	4 (15.1)	9:1	270 - 1350 (18.6 - 93.1)	CL0409A91LL2DE31	Carbon Steel	2-Ball					
	4 (15.1)	9:1	270 - 1350 (18.6 - 93.1)	CL0409A91LL2DE3B	Carbon Steel	2-Ball					
	4.2 (15.9)	4:1	0 - 600 (0 - 41.4)	NM2304B-11-XXX	Stainless Steel	2-Ball		Siphon			
	4.2 (15.9)	4:1	0 - 600 (0 - 41.4)	NM2304B-41-XXX	Stainless Steel	2-Ball		Siphon		Flooded Inlet	
	4.2 (15.9)	4:1	0 - 600 (0 - 41.4)	650313-X, 650314-X	Stainless Steel	2-Ball		Siphon		Flooded Inlet	
	4.3 (16.3)	2:1	0 - 343 (0 - 23.6)	650311-X, 650312-X	Stainless Steel	2-Ball		Siphon		Flooded Inlet	
	4.3 (16.3)	2:1	0 - 351 (0 - 24.2)	NM2202A-11-XXX	Carbon Steel	2-Ball		Siphon			
	4.3 (16.3)	2:1	0 - 351 (0 - 24.2)	NM2202A-41-XXX	Carbon Steel	2-Ball		Siphon		Flooded Inlet	
	4.3 (16.3)	2:1	0 - 351 (0 - 24.2)	NM2202B-11-XXX	Stainless Steel	2-Ball		Siphon			
	4.3 (16.3)	2:1	0 - 351 (0 - 24.2)	NM2202B-41-XXX	Stainless Steel	2-Ball		Siphon		Flooded Inlet	
	4.4 (16.7)	4:1	0 - 600 (0 - 41.4)	NM2304A-11-XXX	Carbon Steel	2-Ball		Siphon			
	4.4 (16.7)	4:1	0 - 600 (0 - 41.4)	NM2304A-41-XXX	Carbon Steel	2-Ball		Siphon		Flooded Inlet	
	5.4 (20.4)	45:1	1350 - 4050 (93.1 - 279.2)	AF1045B11XXXX	Carbon Steel	2-Ball		Siphon			
	5.4 (20.4)	65:1	1950 - 5850 (134.5 - 403.3)	AF1265B11XXXX	Carbon Steel	2-Ball		Siphon			
	6 (22.7)	28:1	840 - 3360 (57.9 - 231.7)	AF0828S11XXXX	Carbon Steel	Chop-Check				Flooded Inlet	
	6 (22.7)	44:1	1320 - 3960 (91 - 273)	AF1044S11XXXX	Carbon Steel	Chop-Check				Flooded Inlet	
	6 (22.7)	65:1	1950 - 5850 (134.5 - 403.3)	AF1265S11XXXX	Carbon Steel	Chop-Check				Flooded Inlet	
	8.7 (32.9)	1.2:1 Hyd	60 - 2670 (4.1 - 184.1)	650941-XXX-C	Carbon Steel	Chop-Check				Flooded Inlet	
0 - 20	12.2 (46.2)	13:1	390 - 1900 (26.9 - 131)	AF0813S11XXXX	Carbon Steel	Chop-Check				Flooded Inlet	
	12.2 (46.2)	20:1	600 - 2250 (41.4 - 155.1)	AF1020S11XXXX	Carbon Steel	Chop-Check				Flooded Inlet	
	12.2 (46.2)	30:1	900 - 3250 (62.1 - 224.1)	AF1230S11XXXX	Carbon Steel	Chop-Check				Flooded Inlet	
	12.9 (48.8)	0.8:1 Hyd	40 - 1600 (2.8 - 110.3)	650940-XXX-B	Stainless Steel	2-Ball		Siphon		Flooded Inlet	
	15 (56.8)	10:1	300 - 1200 (20.7 - 82.7)	AF0810C11XXXX	Stainless Steel	2-Ball		Siphon		Flooded Inlet	
	15 (56.8)	10:1	300 - 1200 (20.7 - 82.7)	AF0810F11XXXX	Stainless Steel	2-Ball		Siphon		Flooded Inlet	
	15 (56.8)	15:1	450 - 1350 (31 - 93.1)	AF1015C11XXXX	Stainless Steel	2-Ball		Siphon		Flooded Inlet	
	15 (56.8)	15:1	450 - 1350 (31 - 93.1)	AF1015FX, AF1015JX	Stainless Steel	2-Ball		Siphon		Flooded Inlet	
	17 (64.4)	0.3:1 Hyd	15 - 386 (1 - 26.6)	650949-XXX	Stainless Steel	2-Ball		Siphon		Flooded Inlet	
	18 (68.1)	1:1	0 - 150 (0 - 10.3)	612041-X	Carbon Steel	2-Ball		Siphon			
	18.1 (68.5)	23:1	690 - 2070 (47.6 - 142.7)	AF1223C11XXXX	Stainless Steel	2-Ball		Siphon		Flooded Inlet	
	18.1 (68.5)	23:1	690 - 2070 (47.6 - 142.7)	AF1223F11XXXX	Stainless Steel	2-Ball		Siphon		Flooded Inlet	
	18.1 (68.5)	23:1	690 - 2070 (47.6 - 142.7)	AF1223C51XXXX	Stainless Steel	2-Ball		Siphon		Flooded Inlet	
0 - 35	21.3 (80.6)	2:1	60 - 312 (4.1 - 21.5)	AF0402M11XXXX	Stainless Steel	4-Ball		Siphon		Flooded Inlet	
	21.3 (80.6)	4:1	120 - 633 (8.3 - 43.6)	AF0604M11XXXX	Stainless Steel	4-Ball		Siphon		Flooded Inlet	
	22.4 (84.8)	0.2:1 Hyd	10 - 278 (0.7 - 19.2)	650950-XXX	Stainless Steel	4-Ball		Siphon		Flooded Inlet	
	23.5 (89)	7:1	210 - 1009 (14.5 - 69.6)	AF0807M11XXXX	Stainless Steel	4-Ball		Siphon		Flooded Inlet	
	29.3 (110.9)	3:1	90 - 457 (6.2 - 31.5)	AF0603M11XXXX	Stainless Steel	4-Ball		Siphon		Flooded Inlet	
	32.8 (124.2)	5:1	150 - 702 (10.3 - 48.4)	AF0805M11XXXX	Stainless Steel	4-Ball		Siphon		Flooded Inlet	

Warranty and Emissions

General Piston Pump Warranty

Ingersoll Rand / ARO Piston Pumps warrants to the original use purchaser of the Ingersoll Rand / ARO Piston Pumps-manufactured products depicted in this catalog that Ingersoll Rand / ARO Piston Pumps will repair or replace free of charge, including return shipping costs within the continental United States of America, any such product which under normal use and service proves defective in material or workmanship, as determined by ARO Inspection, within five (5) years from the date of purchase, provided the claimed defective product or thereof is promptly returned to the Ingersoll Rand / ARO Piston Pumps factory or Customer Service Center with transportation charges prepaid.

If Ingersoll Rand / ARO Piston Pumps inspection discloses no defect in material or workmanship, repair or replacement and return will be made at customary charges.

The foregoing warranty supersedes, voids, and is in lieu of all or any other warranties, express or implied, and no warranty of merchantability or fitness for particular purpose is intended or made. The sole obligation of Ingersoll Rand / ARO Piston Pumps and the original-use purchaser's sole remedy is as stated above, and in no event shall Ingersoll Rand / ARO Piston Pumps be liable for any special, direct, indirect, incidental, consequential, or other damages or expenses of any nature including, without limitation, loss of profits or production time incurred by the original-use purchaser or any other party.

Air Systems Components Warranty

Ingersoll Rand / ARO Piston Pumps warrant to the original-use purchaser of the air systems components depicted in this catalog that Ingersoll Rand / ARO Piston Pumps will repair or replace, free of charge, including return shipping costs within the continental United States of America, any such product which under normal use and service proves defective in material or workmanship, as determined by ARO Inspection, within twelve (12) months from the date of purchase provided the claimed defective product or thereof is promptly returned to the Ingersoll Rand / ARO Piston Pumps Customer Service Repair Center or a factory-authorized service repair center, with transportation charges prepaid. Full warranty information is available upon request.

Noise Emissions

Pump sound pressure levels published here have been updated to an Equivalent Continuous Sound Level (LAeq) to meet the intent of ANSI S1.13-1971. CAGI-PNEUROP S5.1 using four (4) microphone locations.

Pump Motor Size/Stroke (in)	Muffler	Air Operating Pressure psi	Cycles/ Minute	Sound Pressure (LAeq)
PISTON PUMPS				
2″ / 3″	None	150 psi (10.3 bar)	120	80.0 db(A)
2″ / 3″	None	150 psi (10.3 bar)	75	77.8 db(A)
3″ / 3″	None	150 psi (10.3 bar)	120	85.0 db(A)
4.25″ / 4″	67445-1	60 psi (4.13 bar)	40	81.8 db(A) to 89.2 db(A)
4.25″ / 6″	67445-1	60 psi (4.13 bar)	40	81.8 db(A) to 86.5 db(A)
6″ / 6″	67445-2	60 psi (4.13 bar)	40	84.7 db(A)
8″ / 6″	67445-3	60 psi (4.13 bar)	40	86.8 db(A)
10″ / 6″	67445-4	60 psi (4.13 bar)	40	89.8 db(A)
12″ / 6″	67445-5	60 psi (4.13 bar)	40	93.0 db(A)

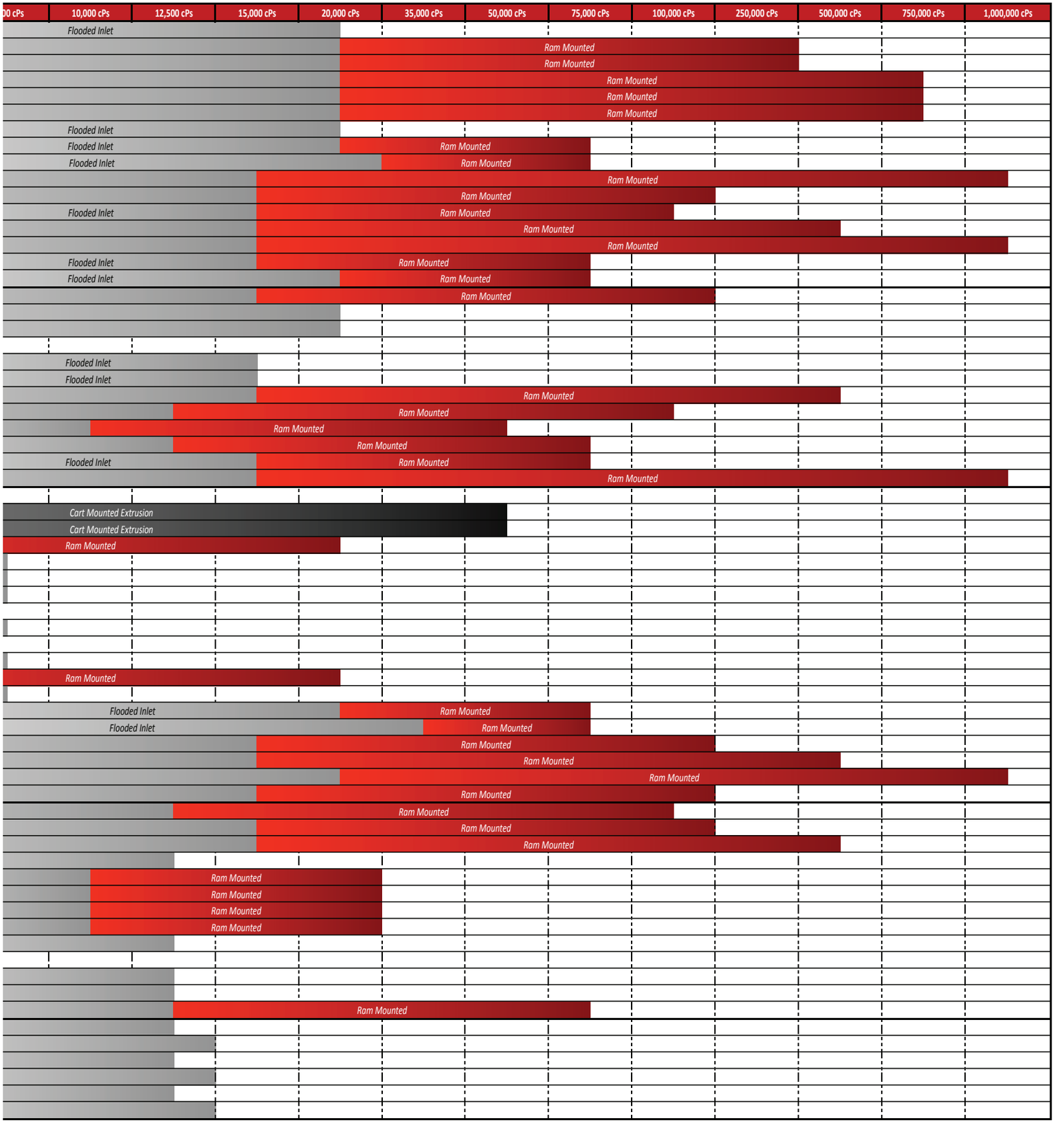
00 cPs
10,000 cPs
12,500 cPs
15,000 cPs
20,000 cPs
35,000 cPs
50,000 cPs
75,000 cPs
100,000 cPs
250,000 cPs
500,000 cPs
750,000 cPs
1,000,000 cPs
Flooded Inlet
Ram Mounted
Ram Mounted
Ram Mounted
Ram Mounted
Ram Mounted
Flooded Inlet
Flooded Inlet
Ram Mounted
Flooded Inlet
Ram Mounted
Ram Mounted
Flooded Inlet
Ram Mounted
Ram Mounted
Ram Mounted
Flooded Inlet
Ram Mounted
Flooded Inlet
Ram Mounted
Ram Mounted
Flooded Inlet
Flooded Inlet
Ram Mounted
Ram Mounted
Ram Mounted
Ram Mounted
Flooded Inlet
Ram Mounted
Ram Mounted
Cart Mounted Extrusion
Cart Mounted Extrusion
Ram Mounted
Ram Mounted
Flooded Inlet
Flooded Inlet
Ram Mounted
Ram Mounted
Ram Mounted
Ram Mounted
Ram Mounted
Ram Mounted
Ram Mounted
Ram Mounted
Ram Mounted
Ram Mounted
Ram Mounted
Ram Mounted
Ram Mounted
Ram Mounted
Ram Mounted
Ram Mounted
Ram Mounted
Ram Mounted

Base Models

Pump and Package Configuration

ARO piston pump and package models can be configured to optimize performance in a wide variety of applications. Materials of construction, pressure ratio, packing seal materials, pump type, and package type can all be configured to ensure your process is handled successfully. The tables listed below provide an overview of the ARO-Force numbering system and the related pump and package options that can be configured:

AFX Pump Numbering System

Position	1	2	3	4	5	6	7	8	9		10
Example:	**AF**	**06**	**45**	**G**	**1**	**1**	**RK**	**4**	**7**	**-**	**1**
	Pump Series	Motor Size	Ratio	Check Type / Wetted Materials	Container Suitability	Fluid Inlet / Outlet Thread Type	Packing Seals (Upper / Lower)	Spring / Solvent Cup	Plunger		Options

Configured to Meet Your Needs

Position	1	2	3	4	5	6	7	8	9	10	11	12
Example:	**TP**	**06**	**45**	**G**	**5**	**1**	**RK**	**4**	**7**	**T**	**N**	**2**
	Package Type	Same As Pump Model Number			Ram Container Size	Same As Pump Model Number				Follower Plate Material	Follower Seal Type, Seal / Backer Material	Package Options

Configured to Meet Your Needs

Our most common pump and package configurations are listed within the related pump brochures. If however, your application requires a configuration that is not listed, feel free to contact the ARO technical support team to discuss additional configuration options that may be available. As the pump experts, there is no application that the ARO team will not try to solve.

Distributed by:

www.AROzone.com arotechsupport@irco.com youtube.com/aropumps (800) 495-0276

ARO®

ARO® is a brand of Ingersoll Rand. Ingersoll Rand (NYSE:IR) advances the quality of life by creating comfortable, sustainable and efficient environments. Our people and our family of brands—including Club Car®, Ingersoll Rand®, Thermo King® and Trane®—work together to enhance the quality and comfort of air in homes and buildings; transport and protect food and perishables; and increase industrial productivity and efficiency. We are a $13 billion global business committed to a world of sustainable progress and enduring results. For more information, visit www.ingersollrand.com.

We are committed to using environmentally conscious print practices.

©2015 Ingersoll Rand IRITS-0415-033