CALL TOLL FREE 877-742-2878 FOR SALES AND SUPPORT Return to BurtProcess.com

Pressure gauges for hygienic use

Alfa Laval Pressure gauges



Application

The Alfa Laval pressure gauge is designed to fulfil the demands of pressure gauges in hygienic and pharmaceutical production. It is suitable as a local indicator in filtration systems, pump system pressure vessels etc. Available in two sizes.

Features: Wetted parts in acid-proof, stainless steel. Measuring range -1 to 60 bar. Process temperature up to 200°C.

Standard range

Our standard range is supplied with a liquid-filled housing. It includes an 80 mm / 100 mm diameter dial and a built-in volume compensator and relief plug. The housing is made of stainless steel (AISI 304) and the clamp connection and pressure sensor are made of stainless steel (AISI 316L).

As an option, it can be delivered electropolished and with 3A, 3.1 or calibration certificates

TECHNICAL DATA

Accuracy: . . . . . Class 1.0 (±1%)
Protection class: IP65

Measuring ranges

-1 to 1 bar
0 to 2.5 bar
0 to 4 bar
0 to 10 bar
0 to 16 bar
0 to 40 bar
0 to 60 bar

Working principle

The pressure gauge working principle is build on the Bourdon principle where pressure applied on the diaphragm is transmitted via silicone oil to a bourdon tube which is in mechanical contact with the dial, and thus indicates the pressure applied on the diaphragm.

Pressure overload on diaphragm: . . . . short time 130% of FS

Certificates

- FDA conformity declaration (option)
- Calibration Certificate (option)
- 3.1 Certificate (option)

Authorized to carry the 3A symbol

CE

PHYSICAL DATA

Materials

Wetted parts: . . . . . AISI 316L
Casing: AISI304
Glass: . . . . . Lexan 121R, polycarbonate
Filling bourdon tube: . . . . . FDA approved silicone oil
Filling housing: . . . . . Glycerine

Operating temperature

Wetted parts: . . . . . up to 200°C.
Casing: . . . . . -20 to 70°C.

Weight

Pressure gauge with Diaphragm: . . . . Approx. 1 kg.

Process connection

Clamp DN38 (ISO2852) / Clamp DN40 (DIN32676).
Clamp DN50 (ISO2857)/Clamp DN51 (DIN32676

Dimensions (mm)

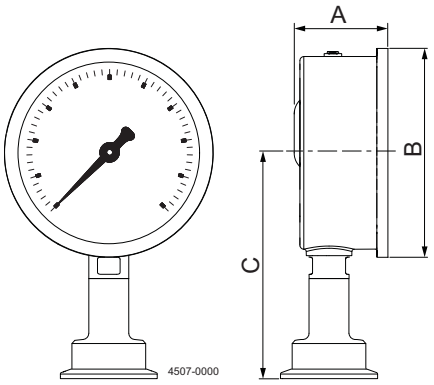

TE67DXXXXXXX4X

	A	B	C
100 mm	45	108	114
80 mm	41	86	101.5

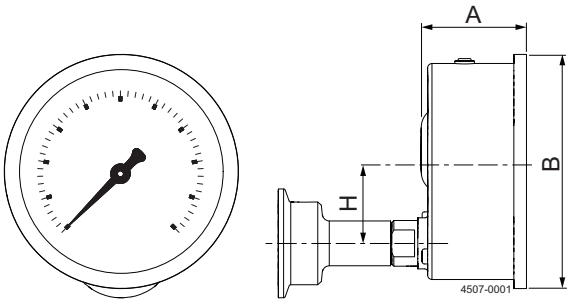

TE67DXXXXXXX5X

	A	B
100 mm	45	108
80 mm	41	86

Alfa Laval reserves the right to change specifications without prior notification. ALFA LAVAL is a trademark registered and owned by Alfa Laval Corporate AB.

ESE00621EN 1511

© Alfa Laval

How to contact Alfa Laval
Contact details for all countries
are continually updated on our website.
Please visit www.alfalaval.com to
access the information direct.