Q-Pumps S.A. de C.V.

Assembly and installation manual

QIM/QDB

Mixer Series

QIM/QDB-M01



02-11

www.qpumps.com

support@qpumps.com

Thank you for purchasing a Q-Pumps product!

This manual contains installation and maintenance instructions for the QIM/QDB Mixer Series

It also includes a part list as well as a troubleshooting chart to assist in determining pump malfunction and practical advices for the maintenance and operation of the equipment.

CONTENTS

About this Manual **3**
Q-Pumps Warranty 3
Safety **4**
important safety information 4
Installation **5**
Instalation guidelines 5
How to install the piping 6
Assembly preliminaries 7
Exploded Assembly **8**
Part List **9**
Assembly **10**
Beggining the assembly 10
Leg bracket assembly 10
Adapter assembly 11
Spacing of the impeller and stub shaft 12
Assembling and installing the mechanical seal 15
Assembling the casing 17
Assembling the QDB 19
Common Problems **23**

ABOUT THIS MANUAL

To ensure the best performance of your pump, please read this manual before starting it. You will find useful information and instructions for the assembly and disassembly procedures required for the necessary pump maintenance.

For any questions related to the operation, maintenance or installation, please contact your local distributor or directly to Q-Pumps:

Q-Pumps S.A. de C.V.
Acceso “A” #103, Fracc. Industrial Jurica
Querétaro, Qro., México, 76130
Call: +52 (442) 218 4570 y +52 (442) 103 3100
Fax: +52 (442) 218 4577
E-mail: support@qpumps.com
Web: www.qpumps.com

The information in this manual might change without notice, we recommend to visit our website for any updates.

Q-Pumps S.A. de C.V. Warranty

Q-Pumps guarantees that all manufactured and sold products are free from defects in materials and manufacture for a period of one (1) year from the date of shipment. The warranty does not apply to products which require repair or replacement due to what is considered normal wear. Conditions caused by normal wear include (but are not limited to standard rotors wear) casing, mechanical seals, gears and bearings wear.

Accidents, operating errors or improper maintenance are not covered by the warranty. Q-Pumps assumes no liability for incidental, accidental or consequential damages. The purchaser by acceptance of delivery assumes all liability for the consequences of use or misuse by it, its employees or third parties. Unless they are approved in advance, Q-Pumps does not assume any costs related to parts and / or service.

Q-Pumps disclaims any responsibility for modifications or conversions to the pump and the system. For security reasons and functionality use original parts only. The use of other parts voids the warranty and excludes liability for any consequences.

The pump is designed only for pumping fluids under established characteristics in the selection sheet. Any other use besides the intended one without the prior written consent of the manufacturer’s application, will result in disclaim of any responsibility from Q-Pumps.

If the pump is stored temporarily or indefinitely, avoid weather exposure and protect the connection ports with plastic plugs supplied with your pump. Turn the pump shaft by hand every two months to change the rotating position of the bearings.

IMPORTANT SAFETY INFORMATION

Safety is very important!

DO NOT attempt to modify any Q-Pumps product, the QIM/QDB Mixer Series have been designed to be safe and reliable, to do so could create unsafe conditions and void all warranties.

DO NOT place any Q-Pumps product in an application where general product service ratings are exceeded. If the maintenance and operation personnel do not observe the instructions in this manual could result in personal injury or machine damage.

The following **DANGER, WARNING, and CAUTION** signs and their meanings are used within these instructions to avoid serious injury and/or possible damage to equipment.

⚠ DANGER

Indicates an imminently hazardous situation which, if not avoided, will result in death or serious injury. The word danger is used in the most extreme cases.

⚠ WARNING

Indicates a potentially hazardous situation which, if not avoided, could result in minor or moderate injury. May also be used to alert against an unsafe operating or maintenance practice.

⚠ CAUTION

Indicates a potentially hazardous situation which, if not avoided, could result in death or serious injury.

CODE 136530001
(Rotating direction ccw)



CODE 136530002
(Guard warning)



Safety labels are placed on every pump. DO NOT remove any labeling on any Q-Pumps product. Replace any label that is missing.

SAFETY

DESCRIPTION

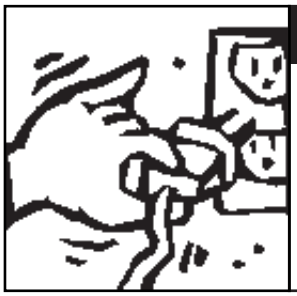

⚠ WARNING

Before servicing pump, disconnect electrical power source, carefully relieve all pressure and drain all fluids from pump and connected piping.

Before servicing pump, disconnect electrical power source.

The QIM/QDB Mixer Series closed-coupled pumps are made up of two sections, power or drive section and the liquid end or pump section.

The pump is mounted to the frame of the drive motor by means of an adapter, and is coupled to the motor shaft. The impeller mounts on the stub shaft and is retained by one of the three methods. The casing is clamped to the adapter, greatly simplifying removal, and also permitting positioning of the discharge outlet through 360º. The external, balanced seal assures long seal life. The drive motor is mounted on a frame having adjustable legs providing simple installation and leveling.

INSTALLATION GUIDELINES

UNPACKING EQUIPMENT

Check the contents and all wrapping when unpacking your equipment. Inspect all parts for damage that may have occurred during shipping. Report any damage to the carrier.

LOCATION AND INSTALLATION

The pump unit should be located as near as possible to the liquid source and in a position where the suction piping can be short and direct with a minimum number of elbows and fittings. It should also be readily accessible for inspection and cleaning.

The pump unit as received from the factory is ready for installation. To install it, attach a hoist if necessary, loosen the set screws in the adjusting leg brackets, and individually adjust the legs until the pump is leveled. Tighten the set screws.

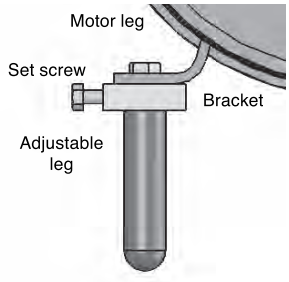

Attach the suction and discharge piping. Be sure suction and discharge piping is properly supported to avoid any strain on the pump casing.

HOW TO INSTALL THE PIPING

GENERAL

This section provides some do's and do not's of piping which will aid in obtaining the maximum efficiency and service from your pump. Piping should be independently supported at both the suction inlet and discharge outlet. Care should be taken that piping is properly aligned and does not put any strain on the pump casing. The piping should have as few bends as possible.

SUCTION PIPING

The suction piping should be short and follow a direct route with a minimum number of elbows and fittings. Elbows should be located as far as possible from the suction inlet to prevent head loss due to increased friction. Excessive friction losses in the suction line could result in pump cavitation, causing poor performance, noise, vibration, damage to equipment and possible damage to fluid.

Whenever possible the diameter of the piping at the suction inlet should be increased in size, an eccentric tapered reducer should be used instead of a concentric tapered reducer to prevent air pockets from forming and impairing pump efficiency. In turn, the eccentric reducer may be placed at the inlet of the pump and should be positioned so the straight side is up. A horizontal suction pipe must have a gradual rise to the pump. A high point in the suction line will form an air pocket and prevent proper pump operation. All joints in the suction line should be air tight, to prevent air leakage which can reduce pump capacity and efficiency.

DISCHARGE PIPING

Position of the pump discharge is preferably either vertical or top horizontal. The discharge piping should be short and direct with a minimum number of elbows and fittings. Elbows should not be used at the discharge outlet, as the friction encountered would be increased, resulting in head loss. However, use of a large discharge pipe than recommended may reduce the total pump head, but increase the pump volume, which can cause pump vibration due to overload. Use of a discharge pipe smaller than the pump discharge outlet increases the total pump head but decreases the volume. If a reducer is required on the outlet port of the pump and the discharge is vertical a concentric reducer should be used. If the discharge is horizontal an ec centric reducer should be used and should be positioned so the straight side is down.

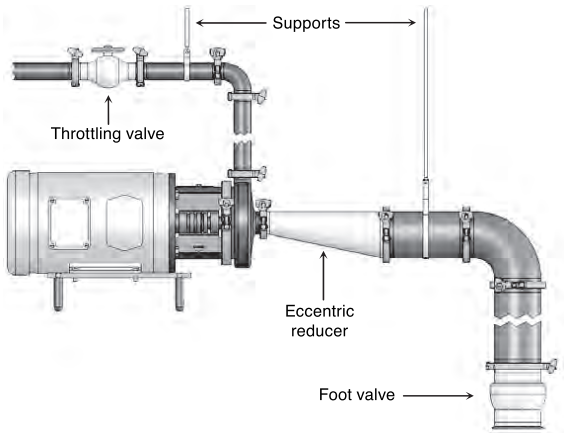

LOCATING VALVES

In suction lift applications where the lift is not very high, it may be desirable to install a foot valve, to facilitate priming, and to prevent draining off of the liquid back to the source. A throttling valve should be installed in the discharge piping to provide control pump flow rate and prevent motor overload.

INSTALLATION

ASSEMBLY PRELIMINARIES



⚠ WARNING

Before servicing pump, disconnect electrical power source, carefully relieve all pressure and drain all fluids from pump and connected piping.

Before beginning the assembly procedure identify every element that is going to be installed, you can use the exploded view and part list shown in pages 8 and 9. During the assembly you may need the following tools:

1. 1”, 3/4”, 9/16” and 1/2” Wrenches.
2. 3/16” and 1/4” Allen wrenches.
3. Rubber mallet.
4. Caliper or shims.
5. 5/8” & 7/8” Socket – for impeller nut.
6. 3/8” diameter steel rod – to hold stub shaft plus.
7. Torque Wrench

EXPLODED ASSEMBLY

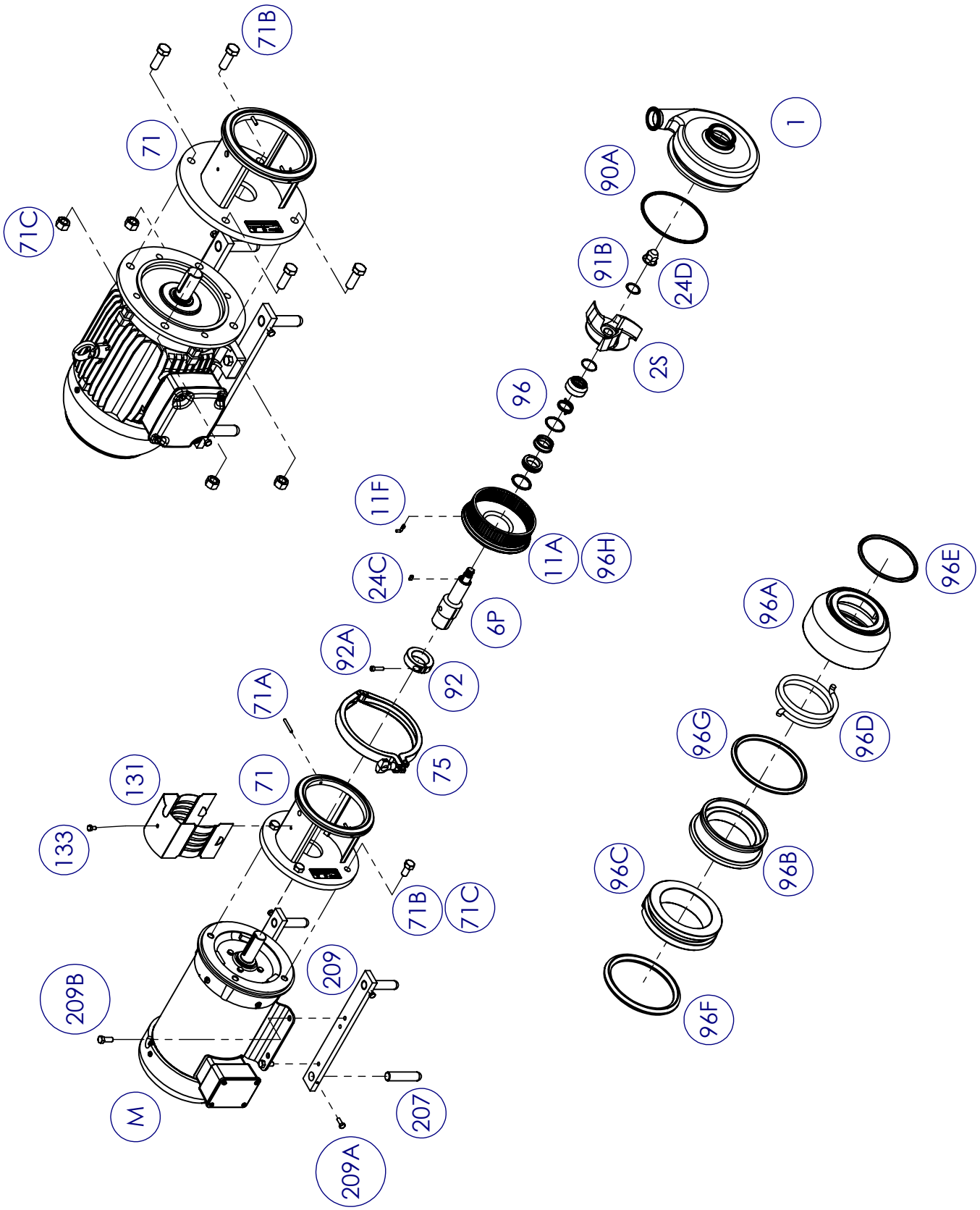

PART LIST

ITEM	DESCRIPTION	QTY
1	Casing	1
2S	Impeller	1
6P	Stub shaft	1
11A	Back plate	1
11F	Backplate pin	2
11J	Backplate cup (only models 4410/6410)	2*
11K	Flat head screw (only models 4410/6410)	2*
24C	Impeller key	1
24D	Impeller nut	1
71	Adaptader	1
71A	Long pin (except models 4410/6410)	2*
71B	Hexagonal screw	4
71C	Hexagonal nut (only IEC B5 frames)	4
75	Clamp assembly (except model 4410/6410)	1
76	Clamp assembly (only models 4410/6410)	1
76A	Hexagonal brass nut (only models 4410/6410)	2
76B	Washer (only models 4410/6410)	2
76C	Hexagonal screw (only models 4410/6410)	2
76D	Clamp assembly bracket	2
90A	Casing O-ring	1
91B	Impeller front gasket	1
92	Stub shaft collar	1

ITEM	DESCRIPTION	QTY
92A	Allen screw	**
96	Internal mechanical seal	1
96A	Rotary holder	1
96B	Rotary single seal face	1
96C	Static single seal fase	1
96D	Single seal spring	1
96E	Rotary holder O-ring	1
96F	Static single seal O-ring	1
96G	Rotary single seal O-ring	1
96H	Seal pin	1
96I	Rotary double seal face	1
96J	Double seal spring	1
96K	Rotary double seal O-ring	1
96L	Double seal rotary holder	1
96M	Set screw	2
96N	Static double seal fase	1
131	Guard	1
133	Hexagonal screw	1
207	Leg	4
209	Bracket	2
209A	Hexagonal screw	4
209B	Hexagonal screw	4

*** Not used in some models.**
**** May be needed 1 or 2 pieces depending on model.**

START THE ASSEMBLY

It is highly recommended that you use the general diagram to identify the components and thus be able to carry out the assemblies and sub-assemblies that will be explained below.

1. LEG BRACKET ASSEMBLIES

The leg bracket assemblies are optional. They allow to level the pumps adjusting the legs vertically. The size of the brackets (209) and legs (207) depend on the NEMA or IEC motor frame.

First make the sub-assemblies of the legs to the brackets with the hexagonal screws (209A). Next, with the hexagonal screws (209B) fix the brackets to the motor base; You may need to lift the motor to make this assembly. **Figure A.**

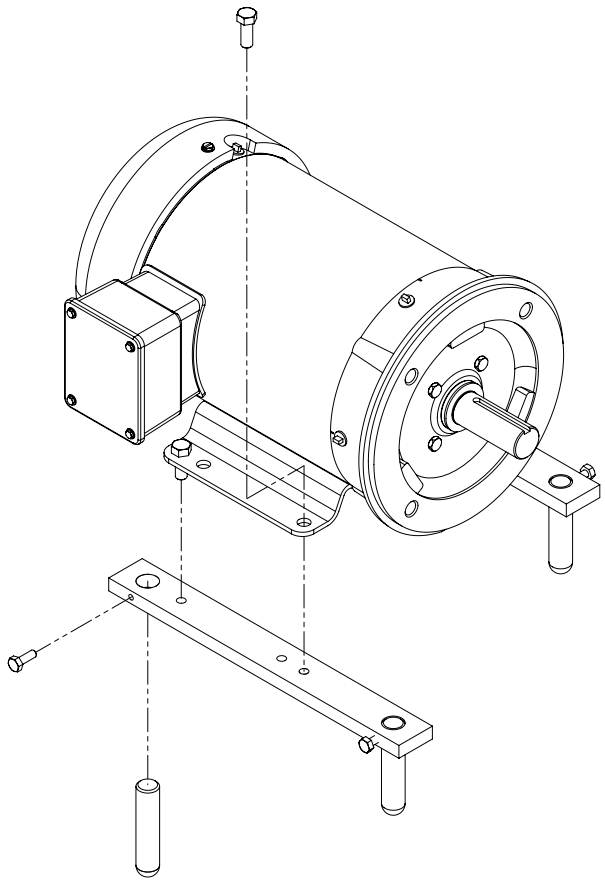

Figure A.

2. ASSEMBLY THE ADAPTER TO THE MOTOR

Place the stainless adapter (71) on the motor flange and fix it with hexagonal screws and tighten to the torque values recommended in **Chart 1.**

Chart 1 – Torque values for tightening the adapter screws		
Torque ft-lb	**Models NEMA**	**Models IEC**
20	Frame 56 to 14	Frame 80 to 90
55	Frame 18 to 25	Frame 110 to 160
70	Frame 28	Frame 180
110	Frame 32 to 36	Frame 200 to 225

For NEMA motors “C” face and IEC motors “C DIN” face (B14 flange) and “C” face (FC flange) use the four hexagonal screws (71B). **Figure B**.

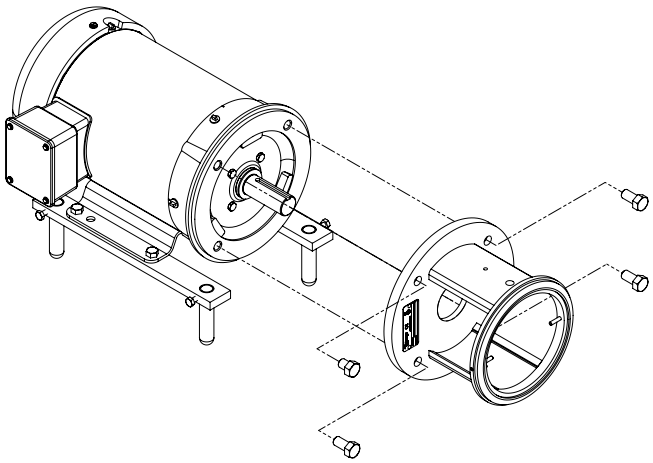

Figure B.

For IEC motors “FF” face (B5 flange) use also the hexagonal nuts (71C). **Figure C.**

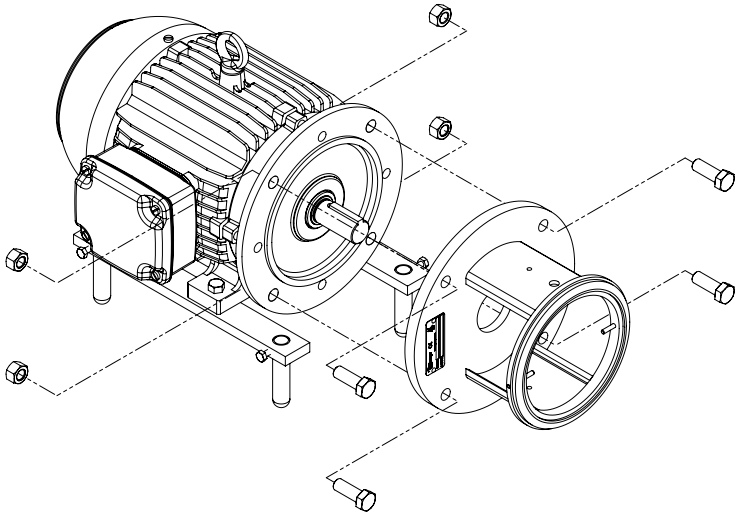

Figure C.

ASSEMBLY

3. SPACING OF THE IMPELLER AND STUB SHAFT

The correct functioning of the pump depends on the separation of the impeller (2S) from the backplate (11A) and the fixation of the stub shaft (6P) on the motor shaft. Follow the next steps to fix the stub shaft on the motor shaft:

3a. Position the stub shaft collar (92) with the corresponding Allen screws (92A) loosely on the stub shaft and place it on the motor shaft, it must slide in and out without problem. **Figure D.**

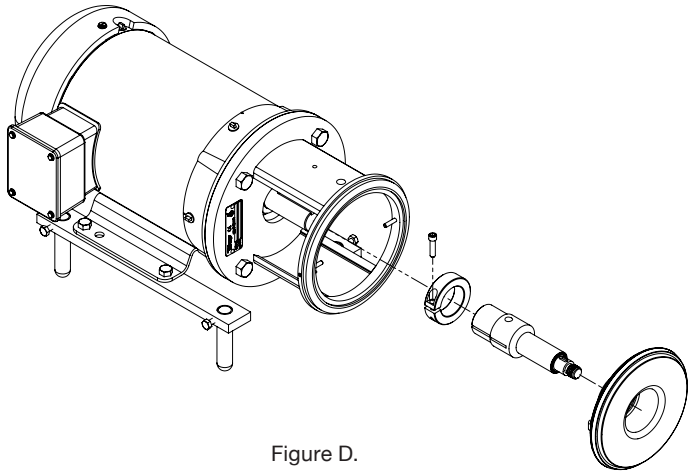

Figure D.

3b. Place and fix the backplate into the adapter. Two long pins are used in the adapter (71A) normally preassembled; if there are no pins please insert them into the holes drilled in the adapter ring. Those pins help to fix the backplate into the adapter using two bended backplate pins (11F). The bended pins shall be clockwise seeing them from the back side of the backplate.

Seat the backplate on the adapter and turn it counterclockwise until the bended pins engage with the long pins. If the bended pins get separated or they do not mate with the long pins, try to adjust them by turning in or out. **Figure E.**

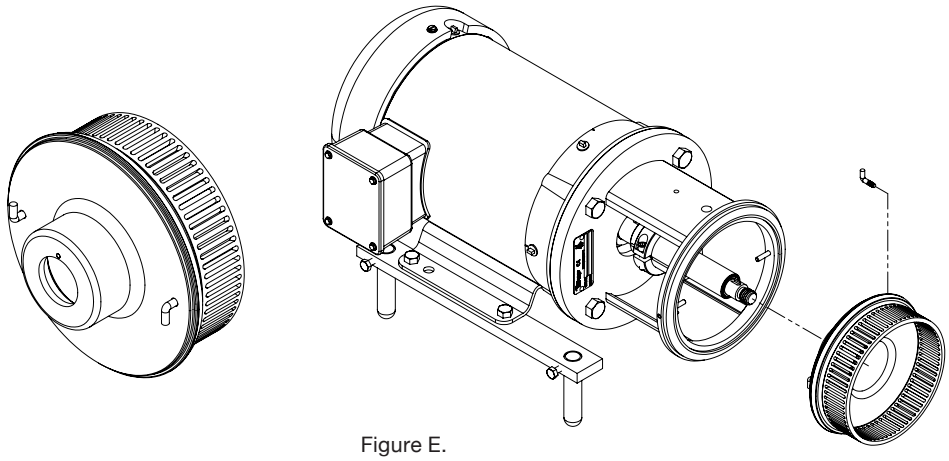

Figure E.

The bended pins help to keep the backplate in position to make the assembly easier.

3c. Put the impeller key (24C) on the keyway of the stub shaft. Place only the rotary holder of the mechanical seal (96A) together with its respective O-ring (96E) until it seats on the shoulder of the stub shaft. The impeller key does not interfere with the mechanical seal drive collar.
Take the impeller nut (24D) and place the impeller gasket (91B) on it, then place the impeller in the stub shaft and tighten with the impeller nut compressing the assembly. **Figure F.**

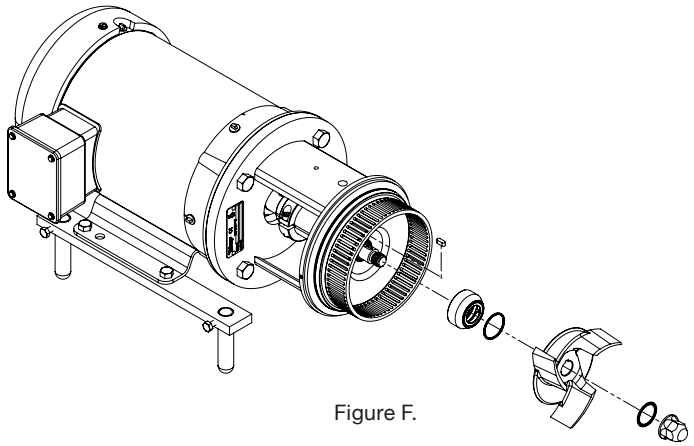

Figure F.

Use a 5/8" hexagonal socket for models 114 and 214 and a 7/8" hexagonal socket for the rest of models to tighten the nut.
To prevent the stub shaft-impeller assembly from turning you can use a Ø3/8" rod in the bore that has the stub shaft on its side and thus be able to tighten or loosen the impeller nut. **Figure G.**

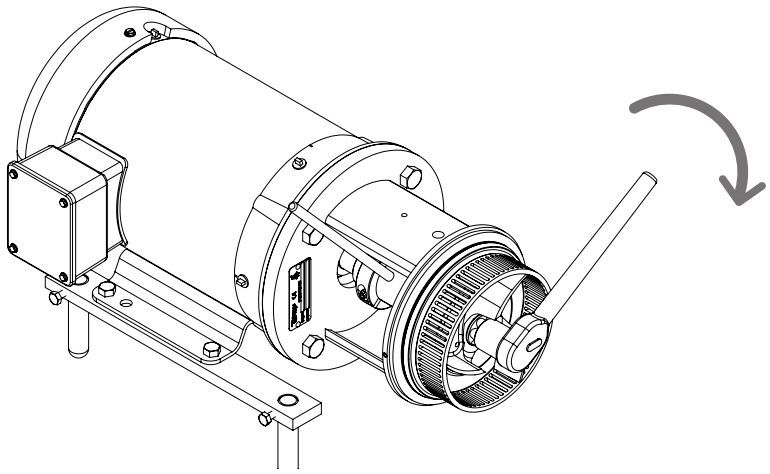

Figure G.

Remember that you can use water or dishes soap to lubricate or glue O-rings and gaskets to the metal elements to facilitate assembly.

3d. Once the assembly is tightened place a spacer of 0.060” (1.53 mm) thru 0.070” (1.78 mm) between the back of the impeller and the front of the backplate. You may use a caliper, some shims or a washer with that width to set the critical distance for the correct performance of the mechanical seal. Keep aligned both, the stub shaft slot and the collar slot before tightening the screws on the shaft collar. Compress the impeller against the backplate with the spacer between them and proceed to tight the screw or screws on the shaft collar. Now turn the impeller by hand, it must turn with no restriction. Check that every blade is separated the distance indicated. **Figure H.**

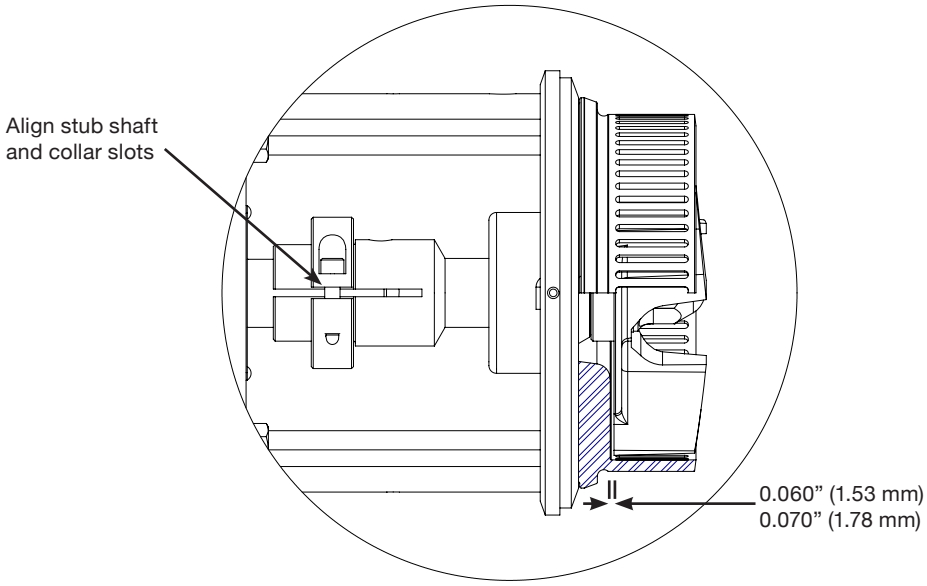

Figure H.

Use the torque values for tightening the collar screws indicated in the **Chart 2.**

Chart 2 – Torque values for tightening the stub shaft collar Allen screws		
Torque ft-lb	**Models NEMA**	**Models IEC**
15	Frame 56 to 18	Frame 80 to 112
30	Frame 21 to 25	Frame 132 to 160
40	Frame 28 to 32	Frame 180 to 225

Chart 2.

3e. Using the 3/8" rod and the hexagonal socket and wrench to untighten the impeller nut to remove the elements previously assembled. Take the impeller nut, impeller gasket, impeller and impeller key off. Do not forget to remove also the spacer used to determinate the stub shaft position. Continue assembling the mechanical seal (96). **Figure I.**

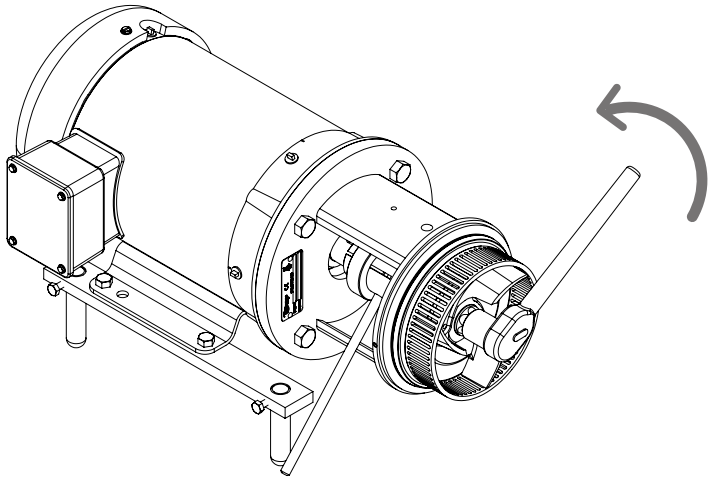

Figure I.

4. ASSEMBLING THE SINGLE MECHANICAL SEAL

4a. Place into the backplate the stationary face of the mechanical seal (96C) with its O-ring (96F). First place the O-ring on the stationary face, remember that you can use water or dishes soap to lubricate or glue O-rings and gaskets to the metal elements to facilitate assembly, place both pieces in the inner housing of the backplate taking care that the notch in the stationary face coincides with the backplate pin (96H). Push until the seal surface fully seats on the surface of the housing. **Figure J.**

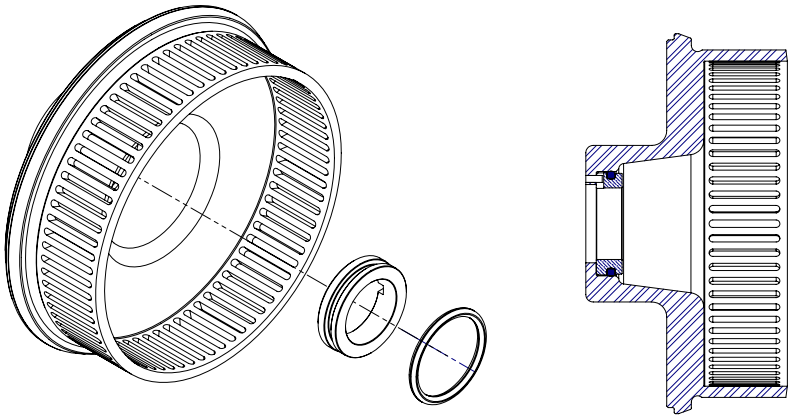

Figure J.

Place and fix the backplate with the stationary seal into the adapter, as in step 3b.

4b. Assembly the rotary single seal face (96B), the rotary seal O-ring (96G), spring (96D) and rotary holder O-ring (96E) into the rotary holder (96A). Remember that you can use water or dishes soap to lubricate or glue O-rings and gaskets to the metal elements to facilitate assembly.
First place the O-ring in the groove on the rotary holder. Then place the spring inside the rotary holder taking care the tip on the spring fits the machined slot in the rotary holder. Put the rotary seal face into the rotary holder. The tip on the spring must fit the machined slot in the rotary seal face. Then compress until the rotary seal face is inserted. Finally place the rotary holder O-ring in the groove on the front of the holder. **Figure K.**

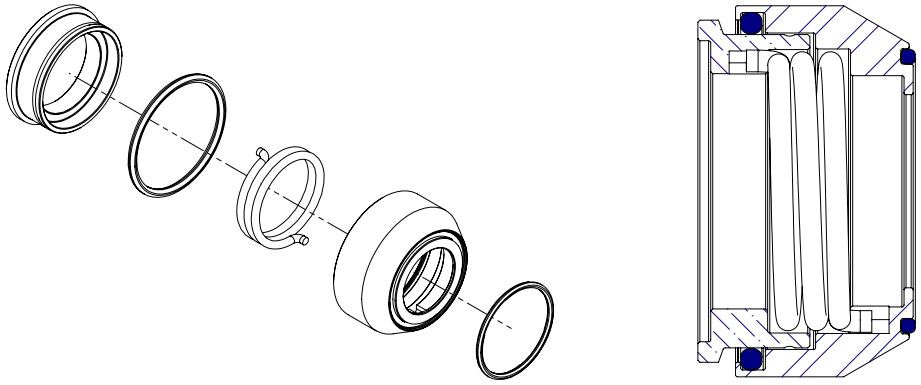

Figure K.

4c. Insert the whole rotary seal assembly into the stub shaft, the seal will contact the stationary seal face placed previously in the backplate. Push to compress the assembly and then insert the impeller key. Put the impeller and tight it with the impeller nut. Do not forget to place the impeller gasket into the impeller nut. **Figure L.**

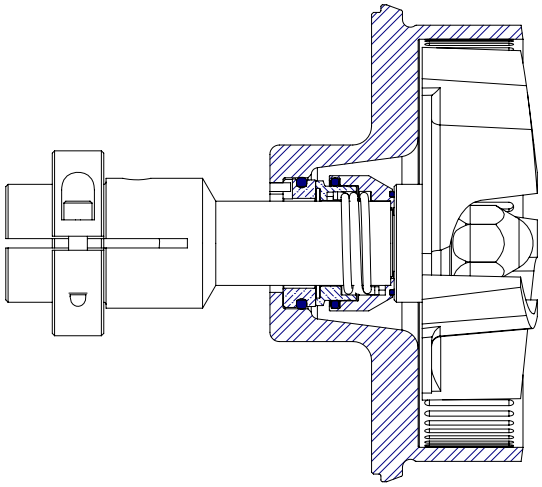

Figure L.

Tight the assembly as previously did before in step 3c. For models 114 and 214 use a torque of 25 ft.lb and a torque of 40 ft.lb for the rest of the models when tightening the impeller nut. **Figure M.**

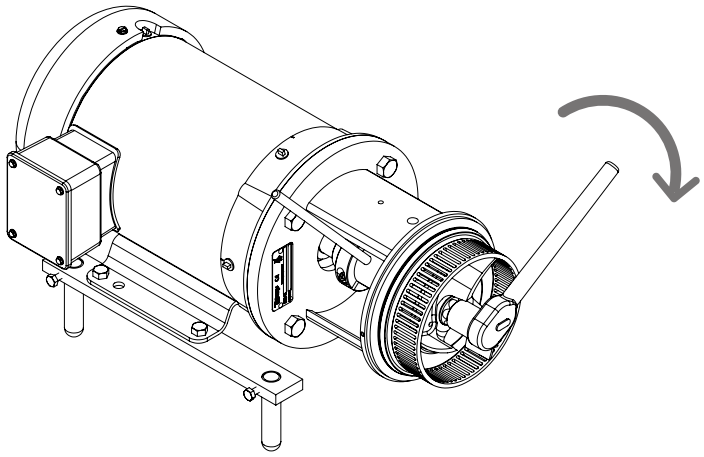

Figure M.

5. ASSEMBLING THE CASING

5a. Once the mechanical seal has been installed and the impeller-impeller nut assembly has been tightened the casing must be mounted.
Place the casing O-ring (90A) onto the groove on the front of the backplate. Then take the casing (1) and locate it onto the adapter, positioning the discharge at the desired location. Place the clamp assembly (75) around the casing. **Figure N.**

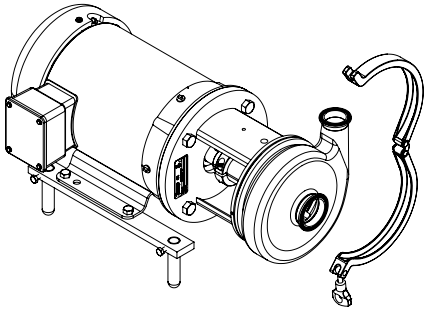

Vertical position

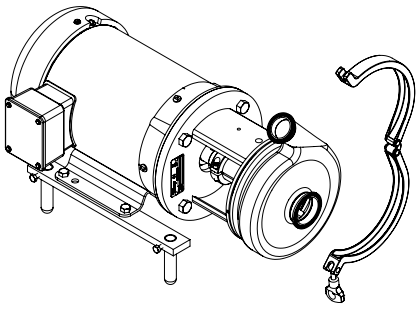

45º Inclination

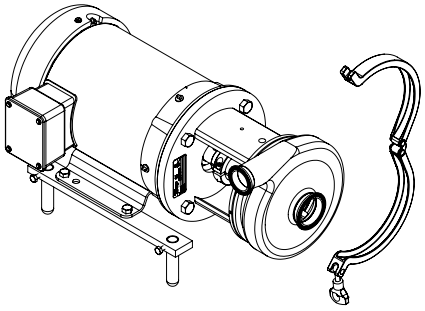

Horizontal position

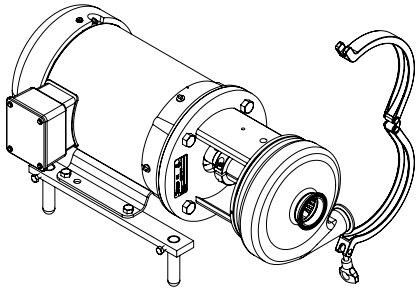

Lower horizontal position

In a lower horizontal position, the casing can be self-drainable.

5b. Tighten the clamp assembly to close the casing to the adapter, be sure it is centered and level around all the circumference. Avoid that the casing fits unevenly in the adapter to prevent it from rubbing against the impeller. A rubber mallet may be helpful when installing the casing hitting softly to even the separation while tightening the clamp assembly. **Figure O.**

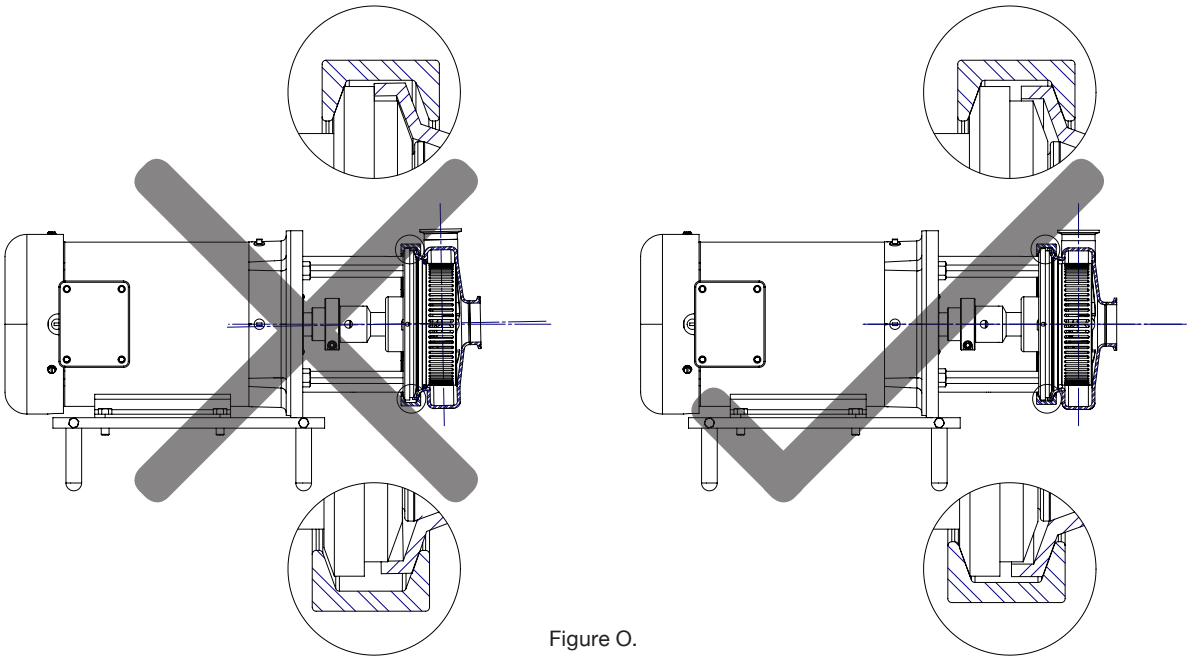

Figure O.

5c. Check turning by hand the impeller it does not rubs against the casing. The assembly may turn easily without restriction. If there is any sound or sensation of rubbing, you need to check the whole assembly, disassembly and repeat it again.

5d. If everything is fine, to complete the assembly place the protective guard (131) that is fixed with a hexagonal screw (131A) into the adapter.
It is highly recommended for safety reasons not to operate the equipment if it is not placed in the adapter.

Notes.
Before starting the pump check that the motor turns in a counterclockwise direction.
Keep the suction line flooded and the mechanical seal lubricated with the fluid which is going to be pumped. Never operate the pump when dry or it may damage the seal.
Maintain enough NPSH available in the suction line to avoid the pump to cavitate.
Do not support the weight of the pipe on the pump casing, the pipe must be adequately supported to avoid this.
The impeller for QIM/QDB series must be trimmed to a specific diameter. If you need to spare the impeller do not forget to tell it is for a QIM/QDB equipment.

6. ASSEMBLING THE QDB

6a. Identify the elements that conform the standard QDB assembly. **Figure 1.**

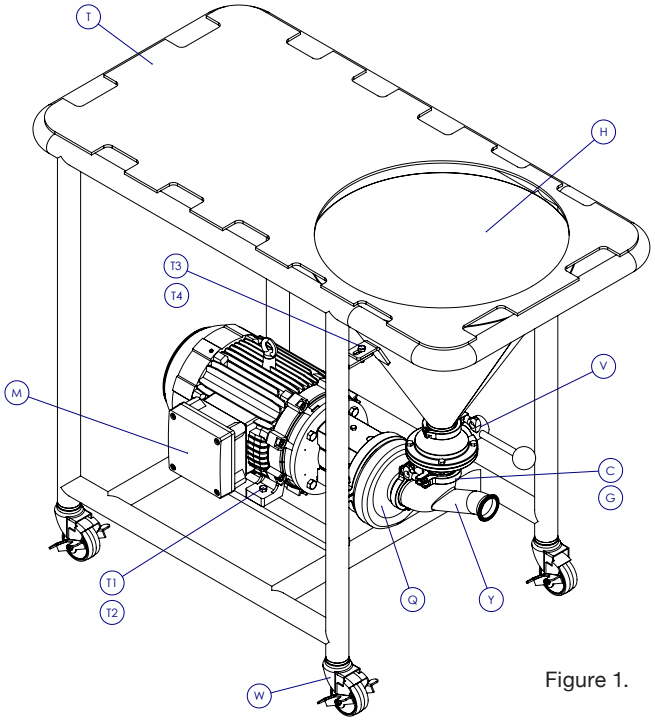

Figure 1.

(C) – Clamp assemblies (x 3 pieces)
(G) – Clamp Gaskets (x 3 pieces)
(H) – Hopper
(M) – Motor
(Q) – QIM (In-Line Mixer)
(T) – Table
(T1) – Hexagonal screws (x 4 pieces)
(T2) – Hexagonal nuts (x 4 pieces)
(T3) – Hexagonal screws (x 2 pieces)
(T4) – Hexagonal nuts (x 2 pieces)
(V) – Ball valve
(W) – Wheels (x 4 pieces)
(Y) – Y-elbow

6b. Check that the QDB table (T) has installed the wheels (W) and is clear for assembling the QIM (Q) on it. If the wheels are not installed, then install them. Assembly the QIM to the motor (M). Follow the instructions described on sections 2 thru 5 to do this. **Figure 2.**

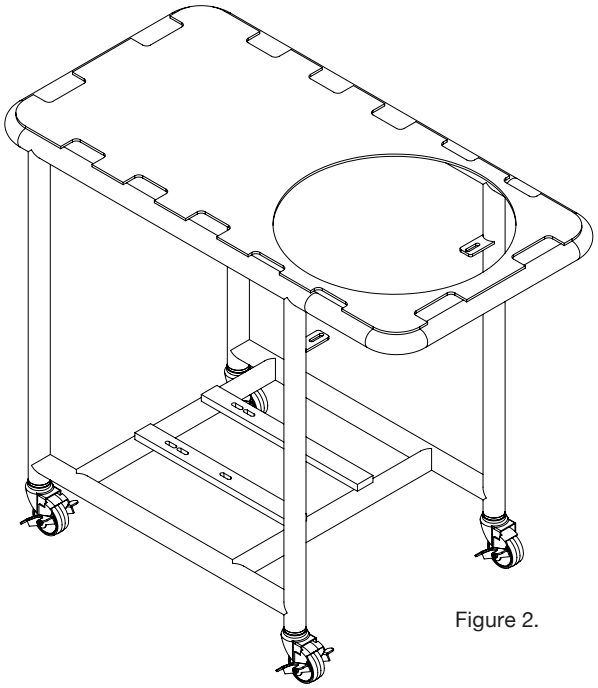

Figure 2.

6c. Place the QIM onto the QDB table and fix the motor using the hexagonal screws (T1) and nuts (T2) to the brackets on the table. Do not tight the screws until the hopper (H) is installed. **Figure 3.**

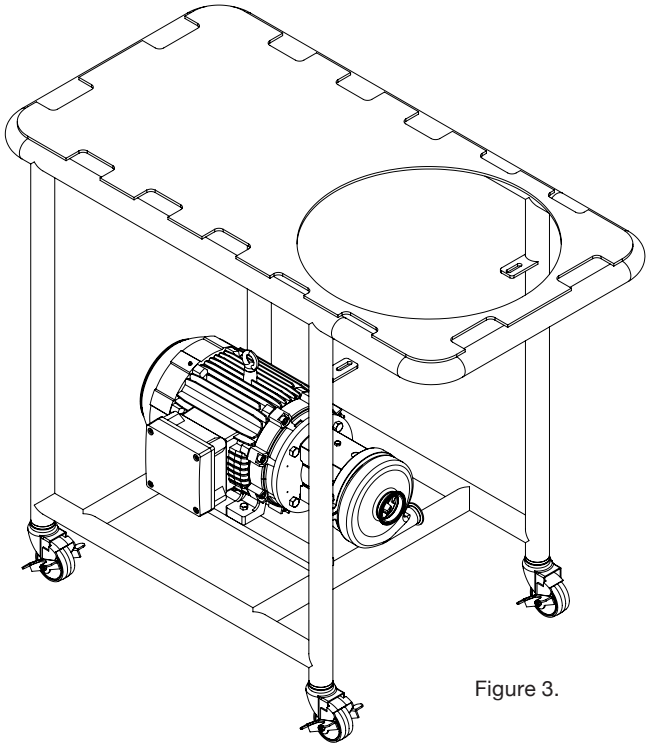

Figure 3.

6d. Install the Y-elbow (Y) in the suction of the QIM. Use the clamp gasket (G) and clamp assembly (C) to fix it. Keep the Y-elbow top suction horizontal aligned. Be sure the clamp gasket is placed correctly to avoid leaking. **Figure 4.**

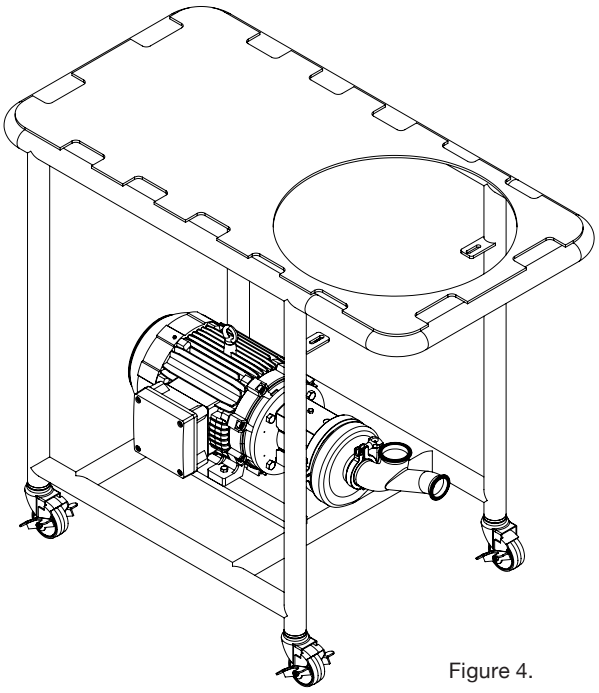

Figure 4.

6e. Continue mounting the hopper on the tabs at the sides of the poles of the table. Use the hexagonal screws (T3) and nuts (T4) to maintain in position the hopper but do not tight them yet so you can lift the hopper to install the ball valve (V). **Figure 5.**

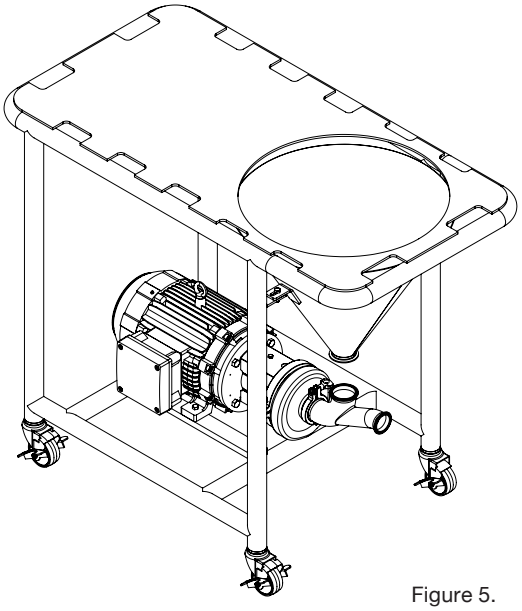

Figure 5.

6f. Install now the ball valve in the top of the Y-elbow. Use the clamp gasket and clamp assembly to fix it to the Y-elbow. It is recommended to place the valve with the lever in a vertical lower position against the hopper to facilitate its opening.
Lift the hopper to center the ball valve with the hopper and use the clamp gasket and clamp assembly to fix it to the ball valve. It may be required to pull or push the QIM assembly to do this.
Be sure the clamp gaskets are placed correctly to avoid leaking.
Now tight the hopper screws with a 20 ft.lb torque and fix the QIM tightening the brackets screws with a 40 ft.lb torque. **Figure 6.**

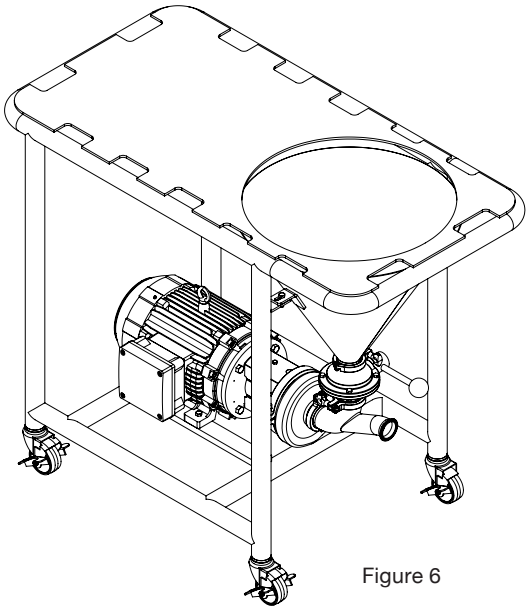

Figure 6

Notes.

Before starting the pump check that the motor turns in a counterclockwise direction.
Keep the suction line flooded and the mechanical seal lubricated with the fluid which is going to be pumped. Never operate the pump when dry or it may damage the seal.
Maintain enough NPSH available in the suction line to avoid the pump to cavitate.
Do not support the weight of the pipe on the pump casing, the pipe must be adequately supported to avoid this.
The impeller for QIM/QDB series must be trimmed to a specific diameter. If you need to spare the impeller do not forget to tell it is for a QIM/QDB equipment.

Recommendations.

When running the QDB dry with the open valve for long time it may cause the mechanical seal is not lubricated very well and may generate too much heat. To avoid this, it is recommended to close the valve for a short period of time just to lubricate and cool the seal.

QUICK GUIDE FOR SOLVING COMMON PROBLEMS

Q-Pumps products are relatively easy to maintain with the exception of the sanitary process. Just as with any other element of machining, problems may arise. This section offers a guide for identifying and correcting the majority of the pumping problems. For problems with you motor, contact the manufacturer directly for best assistance.
The following table illustrates the problems and probable causes, assuming that the pump was correctly selected for a specific application. If none of the listed solutions provided in the table resolves the problem, the most likely cause is cavitation. Cavitation may be caused by an incorrect pump selection and its symptoms include: excessive noise, insufficient pressure, fluid leak and vibration. If these symptoms are bpresent, please re-evaluate your application.

1. NO FLOW	**SOLUTIONS**
a) Motor speed too low. b) Incorrect rotation direction. c) Obstruction in discharge piping or closed valves.	a) Check electric connections and motor. b) Reverse one of the motors three phases. If direction does not change, contact manufacturer. c) Remove obstruction and open valves.
2. INSUFICIENT FLOW	
a) Motor speed too low. b) Incorrect rotation direction. c) Obstruction in discharge piping or closed valves. d) Impeller damaged.	a) Check electric connections and motor. b) Reverse one of the motors three phases. If direction does not change, contact manufacturer. c) Remove obstruction and open valves. d) Replace impeller.
3. EXCESSIVE POWER CONSUMPTION	
a) Motor speed too high. b) Impeller damaged. c) Motor shaft is bended or worn.	a) Motor wires are bad, replace motor. b) Remove casing and replace impeller. c) Replace motor shaft.
4. EXCESSIVE NOISE	
a) Magnetic problem with motor. b) Motor bearings damaged. c) Foreign particles in impeller. d) Impeller damaged. e) Cavitation.	a) Consult motor manufacturer. b) Replace bearings. c) Remove casing and extract particles. d) Replace impeller. e) Check system's available NPSH. d) Cavitation.
5. EXCESSIVE VIBRATION	
a) Pump is not leveled. b) Impeller damaged. c) Piping lacks supports. d) Cavitation.	a) Level the pump. b) Replace impeller. c) Support suction and discharge piping. d) Check system's available NPSH.
6. FLUID LEAK	
a) Disposable o-rings. b) Disposable carbons. c) Insufficient seal compression. d) Damaged casing suction/discharge. e) Disposable casing gasket. f) Loose clamp assembly.	a) Replace o-rings. b) Replace carbons. c) Replace spring. d) Replace casing. e) Replace casing gasket. f) Tighten clamp assembly.

Q-Pumps S.A. de C.V.

Installation and operation manual for
QIM/QDB Mixer Series

Acceso “A” #103, Fraccionamiento Industrial
Jurica, Querétaro, Qro., México, 76130
Teléfono: +52 (442) 218 4570 / 218 7400
Fax: +52 (442) 218 4577

support@qpumps.com

www.qpumps.com