1-1/2˝ Self-Priming Centrifugal Pumps



Model
282K-95

- 300 Series Investment Cast Stainless Steel Construction with Viton® Seals
- Cast Iron Construction with Buna-N Seals
- Optional Silicon Carbide Seals Available
- 1-1/2˝ NPT Port Size
- Maximum Temperature
  - Stainless Steel 200° F
  - Cast Iron 180° F
- Maximum Flow 120 GPM
- Maximum Head 102 Ft. (44 PSI)
- Self-Priming up to 20 Feet with Built-in Check Valve
- Self-Cleaning, Clog Resistant Impeller
- Solids Handling and Dirty Water Design
- 1/2 to 3 HP 56J Single or Three Phase 3450 RPM Motors

This line of AMT Self-Priming Centrifugal pumps is designed for industrial and commercial applications requiring high volume liquid transfer, waste water drainage and processing. Pumps are designed to handle liquids with solids content or dissolved solids and debris. These pumps feature a self-cleaning clog resistant impeller capable of handling up to 3/8" diameter semi-solids. Built-in flapper/check valve enables consistent self-priming to 20 feet. Dual volute design reduces radial load on motor. Stainless steel models are especially effective in applications where rust and/or corrosion can develop in systems and also are highly resistant to erosion and chemicals.

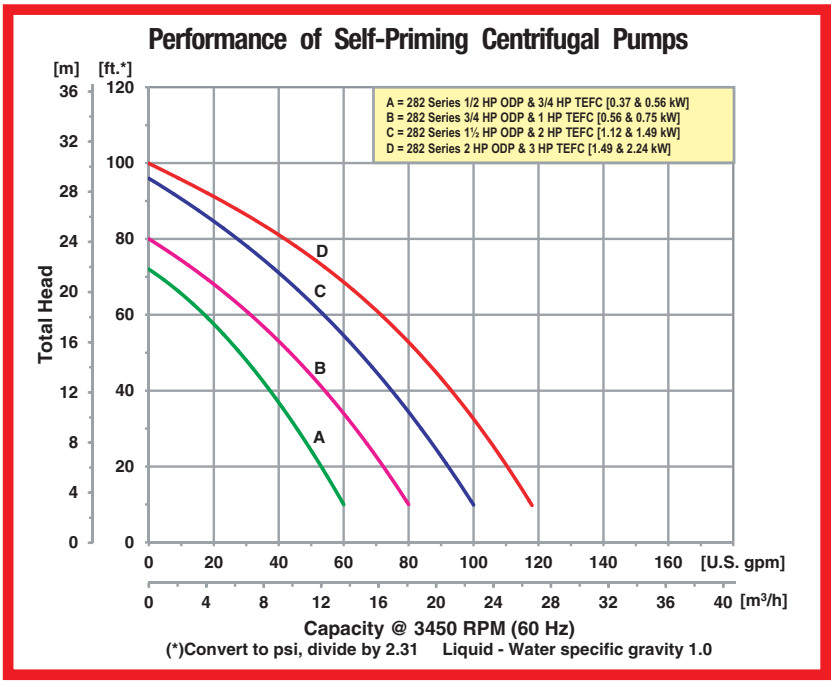

AMT
A Gorman-Rupp Company
400 Spring Street • Royersford, PA 19468 USA
www.amtpump.com • 888-amt-pump (268-7867)

For use with nonflammable liquids compatible with pump component materials. Viton® and Teflon® are registered trademarks of E. I. Dupont.

1-1/2˝ Self-Priming Centrifugal Pumps

Pump Dimensional & Specification Data

Model ‡	Curve	HP	PH	ENC	Voltage @ 60 Hz +	Full Load Amps	SUC*	DIS*	L**	W**	H	Ship Wt. (Lbs.)
2827		1/2	1	ODP	115/230	10/5			16.7 [42.4]	7.3 [18.8]	9.9 [25.4]	54
282D	A	3/4	1	TEFC	115/230	9/5			17.4 [44.2]	9.1 [23.1]	9.9 [25.4]	60
282F		3/4	3	TEFC	230/460	3/2			17.0[43.2]	9.1 [23.1]	9.9 [25.4]	55
2825		3/4	1	ODP	115/230	13/7			17.2 [43.7]	7.3 [18.8]	9.9 [25.4]	60
282C	B	1	1	TEFC	115/230	12/6			17.7 [45.0]	9.1 [23.1]	9.9 [25.4]	61
282K		1	3	TEFC	230/460	4/2			16.3 [41.4]	9.1 [23.1]	9.9 [25.4]	60
2821		1½	1	ODP	115/230	22/11	1½	1½	18.0 [45.7]	7.3 [18.8]	9.9 [25.4]	65
2822	C	1½	3	ODP	230/460	7/4			17.5 [44.4]	7.3 [18.8]	9.9 [25.4]	62
282A		2	1	TEFC	115/230	22/11			18.9 [48.0]	9.1 [23.1]	9.9 [25.4]	73
282B		2	3	TEFC	230/460	6/3			18.5 [47.0]	9.1 [23.1]	9.9 [25.4]	66
2828		2	1	ODP	115/230	28/14			18.0 [45.7]	7.3 [18.8]	9.9 [25.4]	73
282L	D	2	3	ODP	230/460	7/4			18.0 [45.7]	7.3 [18.8]	9.9 [25.4]	69
282E		3	1	TEFC	230	16			19.4 [49.2]	9.1 [23.1]	9.9 [25.4]	82
282M		3	3	TEFC	230/460	8/4			19.0 [48.2]	9.1 [23.1]	9.9 [25.4]	70

(*) Standard NPT (Female) pipe thread.
(**) This dimension may vary due to motor manufacturer's speciifcations.
(+) 3-Phase motors can also operate on 50 Hz. (this will change full load amps, service factor and RPM)
NOTE: Dimensions are in inches (centimeters) and have a tolerance of ± 1/4".
NOTE: Electric supply for ALL motors must be within ± 10% of nameplate voltage rating (e.g 230V ± 10%=207 to 253)

Maximum Solids Handling Capacity: 3/8" Diameter

‡ Add Suffix -95, -97, -98 for Specific Model (Ex. 3890-97)
(-95) Cast Iron Construction with Buna Seals
(-97) Cast Bronze Construction with Stainless Steel Impeller and Viton® Seals
(-98) Cast Stainless Steel Construction with Viton ® Seals

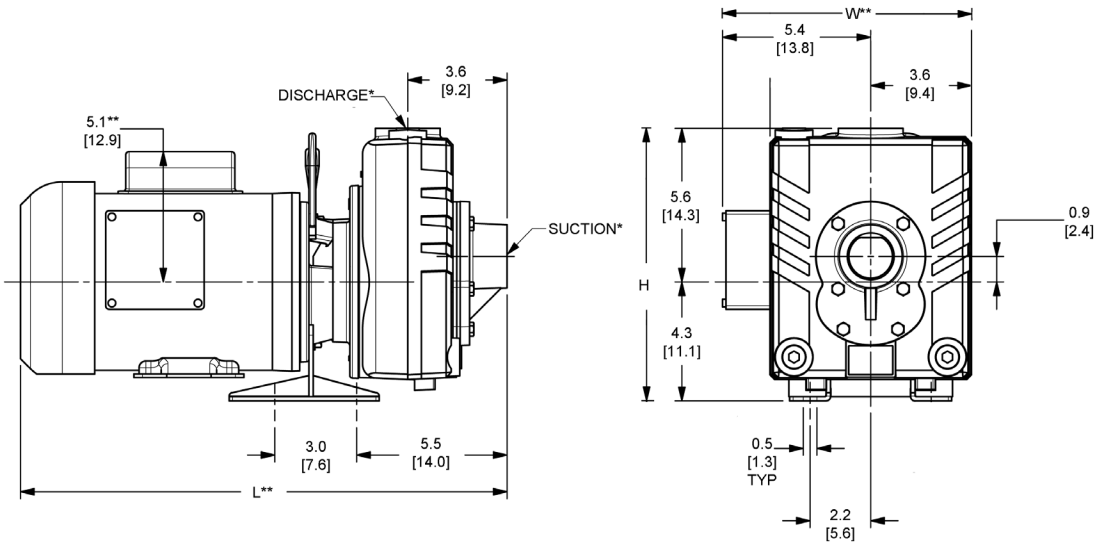

Standard Features

- 300 Series Investment Cast Stainless Steel Construction with Viton® Seals
- Cast Iron Construction with Buna-N Seals
- Handles 3/8" Diameter Semi-solids
- NEMA 56J Motors with Stainless Steel Shaft
- Maximum Working Pressure 75 PSI
- Available in ODP or TEFC, Single or Three Phase Motors
- Self-primes to 20 Ft.
- Self-cleaning, Clog Resistant Impeller
- Steel Base and Handle Included
- Dual Volute Design
- QSP – Quick Ship Pump for Many Models

Hazardous Duty/Xplosion Proof motors available from stock ranging from 1 to 10 HP; *CALL FOR QUOTATION & LEAD TIME!*

Manufacturer of AMT & IPT Pumps
400 Spring Street • Royersford, PA 19468 USA
www.amtpump.com • 888-amt-pump (268-7867)

The Gorman-Rupp Company reserves the right to discontinue any model or change specifications at any time without incurring any obligation.
©2012 American Machine and Tool Company. All rights reserved.

1222