SSB1 & DSB1 METALLIC PUMP TECHNICAL DATA SHEET

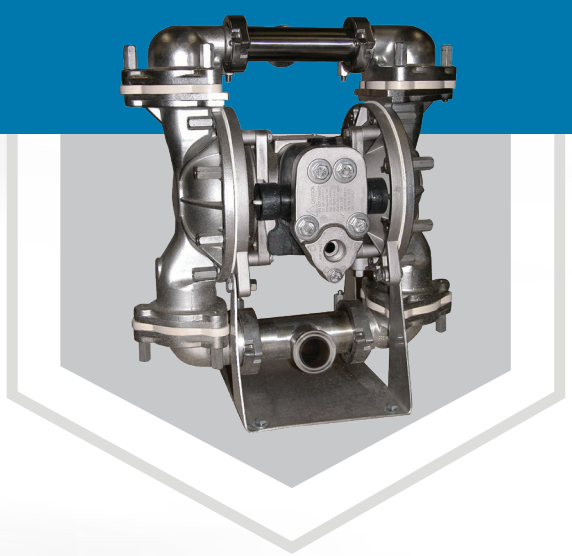

SERIES

PREMIUM FDA COMPLIANT PUMPS

The ultimate in leak protection and clean pumping with the paired performance of AODD technology

PERFORMANCE

SUCTION / DISCHARGE PORT SIZE

- 1 ½" Tri-Clamp Flange Fitting

CAPACITY

- 0 to 54 gallons per minute (0 to 204 LPM)

AIR DISTRIBUTION VALVE

- No-lube, no-stall design

SOLIDS-HANDLING

- Up to .25 in. (6mm)

HEADS UP TO

- 125 psi or 289 ft. of water (8.6 Kg/cm^2 or 86 meters)

MAXIMUM OPERATING PRESSURE

- 125 psi (8.6 bar)

DISPLACEMENT/STROKE

- .09 Gallon / .34 liter

WEIGHTS

- SSB1 Models 60 lbs. (27.2kg)
- DSB1 Model 62 lbs. (28.1kg)

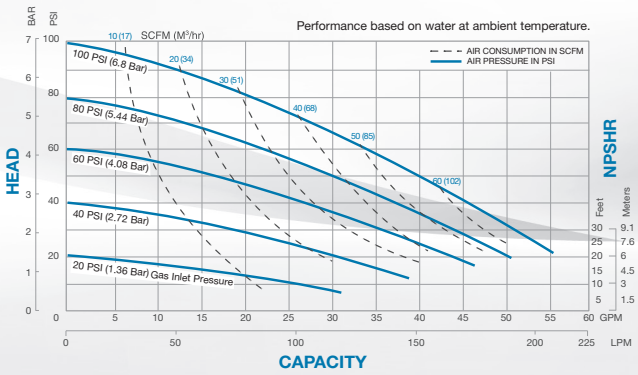

DIMENSIONS

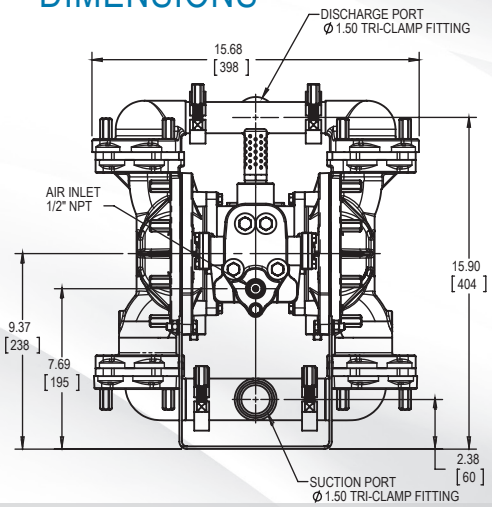

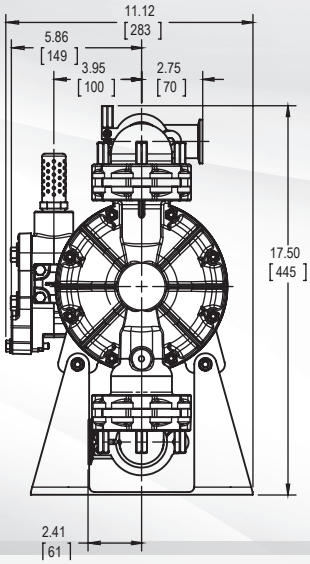

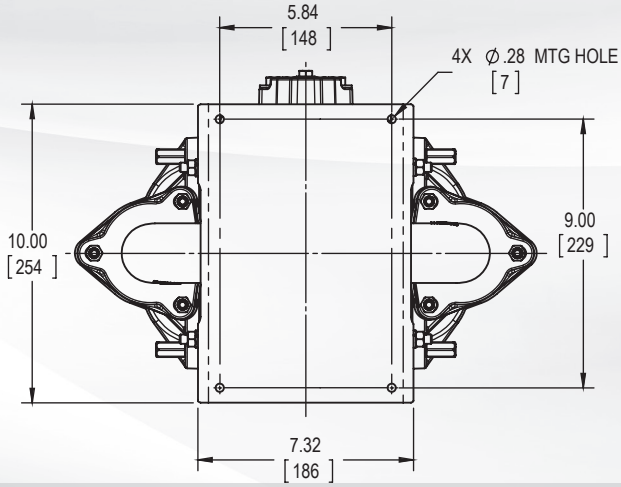

5 YEAR LIMITED PRODUCT WARRANTY

5 Year Guarantee for defects in material or workmanship. See sandpiperpump.com/content/warranty-certifications for complete warranty, including terms and conditions, limitations and exclusions.

USE ONLY GENUINE SANDPIPER PARTS

All certification, standards, guarantees & warranties originally supplied with this pump will be invalidated by the use of service parts not identified as "Genuine SANDPIPER Parts."

SANDPIPER®
SANDPIPERPUMP.COM
Warren Rupp, Inc. • A Unit of IDEX Corporation
800 N. Main St., Mansfield, Ohio 44902 USA
Telephone 419.524.8388 • Fax 419.522.7867

ISO 9001 Certified
ISO 14001 Certified

EXPLANATION OF PUMP NOMENCLATURE

Your Model #:
(fill in from pump nameplate)

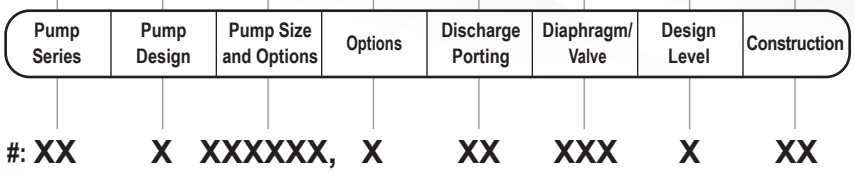

Model #: XX X XXXXXX, X XX XXX X XX

PUMP SERIES
S SANDPIPER®

PUMP DESIGN
B BALL VALVE

PUMP SIZE
1 1 1/2" Tri-Clamp

DISCHARGE PORTING POSITION
T Top

DIAPHRAGM CHECK VALVE MATERIALS
F FDA Accepted White Nitrile
Y FDA Accepted EPDM

DESIGN LEVEL
4

CONSTRUCTION
SS Stainless Steel Wetted, Aluminum Air

OPTIONS
MODEL DSB1 REQUIRES AMN ELECTRONIC LEAK DETECTOR:

032.037.000 (110VAC)
032.043.000 (220VAC)
032.044.000 (12-32VDC)

THIS MODEL IS NOT ATEX COMPLIANT.

MATERIALS

Material Profile: ⚠ CAUTION! Operating temperature limitations are as follows:	Operating Temperatures: Max.	Min.
CONDUCTIVE ACETAL: Tough, impact resistant, ductile. Good abrasion resistance and low friction surface. Generally inert, with good chemical resistance except for strong acids and oxidizing agents.	190°F 88°C	-20°F -29°C
EPDM: Shows very good water and chemical resistance. Has poor resistance to oils and solvents, but is fair in ketones and alcohols.	280°F 138°C	-40°F -40°C
FKM (FLUOROCARBON): Shows good resistance to a wide range of oils and solvents; especially all aliphatic, aromatic and halogenated hydrocarbons, acids, animal and vegetable oils. Hot water or hot aqueous solutions (over 70°F(21°C)) will attack FKM.	350°F 177°C	-40°F -40°C
HYTREL®: Good on acids, bases, amines and glycols at room temperatures only.	220°F 104°C	-20°F -29°C
NEOPRENE: All purpose. Resistance to vegetable oils. Generally not affected by moderate chemicals, fats, greases and many oils and solvents. Generally attacked by strong oxidizing acids, ketones, esters and nitro hydrocarbons and chlorinated aromatic hydrocarbons.	200°F 93°C	-10°F -23°C
NITRILE: General purpose, oil-resistant. Shows good solvent, oil, water and hydraulic fluid resistance. Should not be used with highly polar solvents like acetone and MEK, ozone, chlorinated hydrocarbons and nitro hydrocarbons.	190°F 88°C	-10°F -23°C
NYLON: 6/6 High strength and toughness over a wide temperature range. Moderate to good resistance to fuels, oils and chemicals.	180°F 82°C	32°F 0°C
POLYPROPYLENE: A thermoplastic polymer. Moderate tensile and flex strength. Resists stong acids and alkali. Attacked by chlorine, fuming nitric acid and other strong oxidizing agents.	180°F 82°C	32°F 0°C
PVDF: (Polyvinylidene Fluoride) A durable fluoroplastic with excellent chemical resistance. Excellent for UV applications. High tensile strength and impact resistance.	250°F 121°C	0°F -18°C
SANTOPRENE®: Injection molded thermoplastic elastomer with no fabric layer. Long mechanical flex life. Excellent abrasion resistance.	275°F 135°C	-40°F -40°C
UHMW PE: A thermoplastic that is highly resistant to a broad range of chemicals. Exhibits outstanding abrasion and impact resistance, along with environmental stress-cracking resistance.	180°F 82°C	-35°F -37°C
URETHANE: Shows good resistance to abrasives. Has poor resistance to most solvents and oils.	150°F 66°C	32°F 0°C
VIRGIN PTFE: (PFA/TFE) Chemically inert, virtually impervious. Very few chemicals are known to chemically react with PTFE; molten alkali metals, turbulent liquid or gaseous fluorine and a few fluoro-chemicals such as chlorine trifluoride or oxygen difluoride which readily liberate free fluorine at elevated temperatures.	220°F 104°C	-35°F -37°C

Maximum and Minimum Temperatures are the limits for which these materials can be operated. Temperatures coupled with pressure affect the longevity of diaphragm pump components. Maximum life should not be expected at the extreme limits of the temperature ranges.

Metals:

ALLOY C: Equal to ASTM494 CW-12M-1 specification for nickel and nickel alloy.

STAINLESS STEEL: Equal to or exceeding ASTM specification A743 CF-8M for corrosion resistant iron chromium, iron chromium nickel and nickel based alloy castings for general applications. Commonly referred to as 316 Stainless Steel in the pump industry.

For specific applications, always consult the Chemical Resistance Chart.

NOTE: See service manual for ATEX details.

SANDPIPER®
SANDPIPERPUMP.COM
Warren Rupp, Inc. • A Unit of IDEX Corporation
800 N. Main St., Mansfield, Ohio 44902 USA
Telephone 419.524.8388 • Fax 419.522.7867