SERVICE & OPERATING MANUAL
Original Instructions

G SERIES

Certified Quality

ISO 9001 Certified
ISO 14001 Certified

Certified to CSA Technical Letter No, R-14

Certified to ANSI LC6-2008

Model G20F
Heavy Duty Flap Valve
Design Level 1

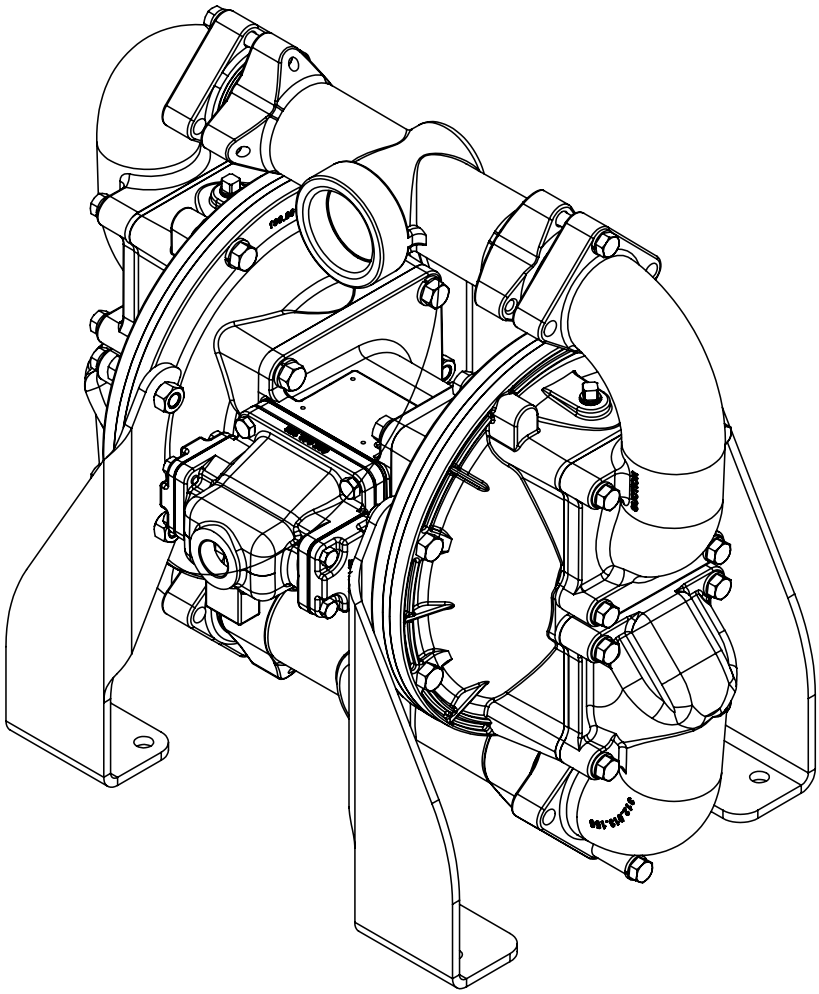

Warren Rupp, Inc.
A Unit of IDEX Corporation
800 N. Main St.,
Mansfield, Ohio 44902 USA
Telephone (419) 524.8388
Fax (419) 522.7867
SANDPIPERPUMP.COM

© Copyright 2022 Warren Rupp, Inc.
All rights reserved

SANDPIPER®
A WARREN RUPP, INC. BRAND
SANDPIPERPUMP.COM

Safety Information

⚠ IMPORTANT



Read the safety warnings and instructions in this manual before pump installation and start-up. Failure to comply with the recommendations stated in this manual could damage the pump and void factory warranty.



When the pump is used for materials that tend to settle out or solidify, the pump should be flushed after each use to prevent damage. In freezing temperatures the pump should be completely drained between uses.

⚠ CAUTION



Before pump operation, inspect all fasteners for loosening caused by gasket creep. Retighten loose fasteners to prevent leakage. Follow recommended torques stated in this manual.



Nonmetallic pumps and plastic components are not UV stabilized. Ultraviolet radiation can damage these parts and negatively affect material properties. Do not expose to UV light for extended periods of time.



WARNING
The use of non-OEM replacement parts will void (or negate) agency certifications, including CE, ATEX, CSA, 3A and EC1935 compliance (Food Contact Materials). Warren Rupp, Inc. cannot ensure nor warrant non-OEM parts to meet the stringent requirements of the certifying agencies.

⚠ WARNING



When used for toxic or aggressive fluids, the pump should always be flushed clean prior to disassembly.



Before maintenance or repair, shut off the compressed air line, bleed the pressure, and disconnect the air line from the pump. Be certain that approved eye protection and protective clothing are worn at all times. Failure to follow these recommendations may result in serious injury or death.



Airborne particles and loud noise hazards. Wear eye and ear protection.



In the event of diaphragm rupture, pumped material may enter the air end of the pump, and be discharged into the atmosphere. If pumping a product that is hazardous or toxic, the air exhaust must be piped to an appropriate area for safe containment.



Take action to prevent static sparking. Fire or explosion can result, especially when handling flammable liquids. The pump, piping, valves, containers and other miscellaneous equipment must be properly grounded.



This pump is pressurized internally with gas pressure during operation. Make certain that all fasteners are in good condition and are reinstalled properly during reassembly.



Use safe practices when lifting

ATEX Pumps - Conditions For Safe Use

1. Ambient temperature range is as specified in tables 1 to 3 on the next page *(per Annex I of DEKRA 18ATEX0094X)*

2. ATEX compliant pumps are suitable for use in explosive atmospheres when the equipment is properly grounded in accordance with local electrical codes

3. **Non-Metallic ATEX Pumps only — See Explanation of Pump Nomenclature / ATEX Details Page**
   Conductive Polypropylene, conductive Acetal or conductive PVDF pumps are not to be installed in applications where the pumps may be subjected to oil, greases and hydraulic liquids.

4. The optionally provided solenoids shall be protected by a fuse corresponding to its rated current (max 3*Irat according to EN 60127) or by a motor protecting switch with short circuit and thermal instantaneous tripping (set to the rated current) as short circuit protection. For solenoids with a very low rated current, a fuse with the lowest current value according to the indicated standard will be sufficient. The fuse may be accommodated in the associated supply unit or shall be separately arranged. The rated voltage of the fuse shall be equal or greater than the stated rated voltage of the solenoid. The breaking capacity of the fuse shall be as high as or higher than the maximum expected short circuit current at the location of the installation (usually 1500 A). The maximum permissible ripple is 20% for all dc solenoids.
   ***Not applicable for all pump models — See Explanation of Pump Nomenclature / ATEX Details Page**

5. When operating pumps equipped with non-conductive diaphragms that exceed the maximum permissible projected area, as defined in EN ISO 80079-36 : 2016 section 6.7.5 table 8, the following protection methods must be applied
   - Equipment is always used to transfer electrically conductive fluids or
   - Explosive environment is prevented from entering the internal portions of the pump, i.e. dry running.

6. Pumps provided with the pulse output kit and used in the potentially explosive atmosphere caused by the presence of the combustible dust shall be installed in such a way that the pulse output kit is protected against impact
   ***Not applicable for all pump models — See Explanation of Pump Nomenclature / ATEX Details Page**

Temperature Tables

Table 1. Category 1 & Category 2 ATEX Rated Pumps

Ambient Temperature Range [°C]	Process Temperature Range [°C][1]	Temperature Class	Maximum Surface Temperature [°C]
-20°C to +60°C	-20°C to +80°C	T5	T100°C
	-20°C to +108°C	T4	T135°C
	-20°C to + 160°C	T3	T200°C
	-20°C to +177°C	(225°C) T2	

[1]Per CSA standards ANSI LC6-2018 US & Canadian Technical Letter R14, G-Series Natural Gas Models are restricted to (-20°C to + 80°C) process temperature

Table 2. Category 2 ATEX Rated Pumps Equipped with Pulse Output Kit or Integral Solenoid:

Ambient Temperature Range [°C]	Process Temperature Range [°C]	Temperature Class	Maximum Surface Temperature [°C]	Options	
				Pulse Output Kit	Integral Solenoid
-20°C to +60°C	-20°C to +100°C	T5	T100	X	
-20°C to +50°C	-20°C to +100°C	T5	T100		X

[2]ATEX Pulse output or Intergral Solenoid Not Available For All Pump Models See Explanation of Pump Nomenclature / ATEX Details Page

Table 3. Category M1 ATEX Rated Pumps for Mining

Ambient Temperature Range [°C]	Process Temperature Range [°C]
-20°C to +60°C	-20°C to +150°C

Note: The ambient temperature range and the process temperature range should not exceed the operating temperature range of the applied non-metallic parts as listed in the manuals of the pumps.

Table of Contents

SECTION 1: PUMP SPECIFICATIONS.....1
- Explanation of Nomenclature
- Performance
- Materials
- Dimensional Drawings

SECTION 2: INSTALLATION & OPERATION ...4
- Principle of Pump Operation
- Recommended Installation Guide
- Troubleshooting Guide

SECTION 3: EXPLODED VIEW.....7
- Composite Repair Parts Drawing
- Composite Repair Parts List
- Material Codes

SECTION 4: GAS END.....10
- Gas Valve Assembly
- Pilot Valve Assembly

SECTION 5: WET END.....13
- Diaphragm Drawings
- Pumping Hazardous Liquids

SECTION 7: WARRANTY & CERTIFICATES ..15
- Warranty
- EC Declaration of Conformity - Machinery
- EC Declaration of Conformity - ATEX

Explanation of Pump Nomenclature

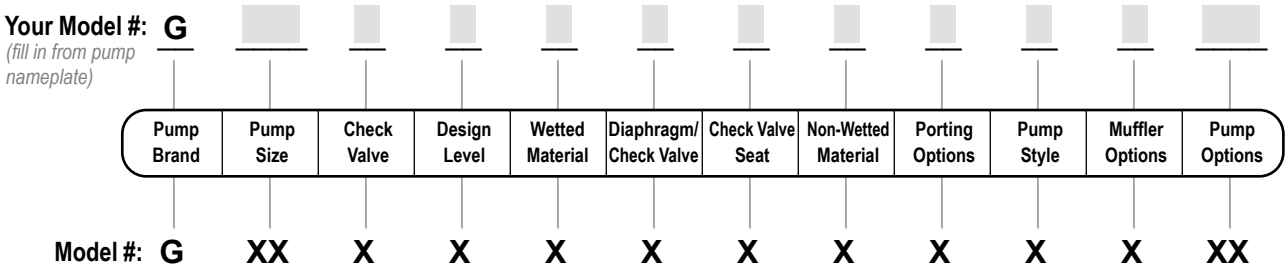

Pump Brand
G Gas Operated

Pump Size
20 2"

Check Valve Type
F Flap

Design Level
1 Design Level

Wetted Material
S Painted Stainless Steel
A Painted Aluminum

Diaphragm/Check Valve Materials
B Nitrile/Nitrile
V FKM/FKM

Check Valve Seat
S Stainless Steel

Non-Wetted Material Options
A Painted Aluminum with Nitrile Elastomer Parts
V Painted Aluminum with FKM Elastomer Parts

Porting Options
N NPT Threads

Pump Style
S Standard

Muffler Options
X No Muffler Permitted *

Your Serial #: *(fill in from pump nameplate)* _____

ATEX Detail

II 2 G Ex h IIC T5...225°C (T2) Gb
II 2 D Ex h IIIC T100°C...T200°C Db

Performance

G20F NATURAL GAS OPERATED

SUCTION/DISCHARGE PORT SIZE
• 2"

CAPACITY
• 0 to 208 gallons per minute
(0 to 786 liters per minute)

GAS DISTRIBUTION VALVE
• No-lube, no-stall design

SOLIDS-HANDLING
• Up to 1.8in. (45mm)

HEADS UP TO
•100 psi - 231 ft. of water
(7 bar - 70 meters)

MAXIMUM OPERATING PRESSURE
• 100 psi (7 bar)

DISPLACEMENT/STROKE
• .47 Gallon / 1.8 liter

SHIPPING WEIGHT
• Aluminum 88 lbs. (39.9kg)
• Stainless Steel 140 lbs. (63.5kg)

MODEL G20F Performance Curve

Performance based on the following: elastomer fitted pump, flooded suction, water at ambient temperature. The use of other materials and varying hydraulic conditions may result in deviations in excess of 5%.

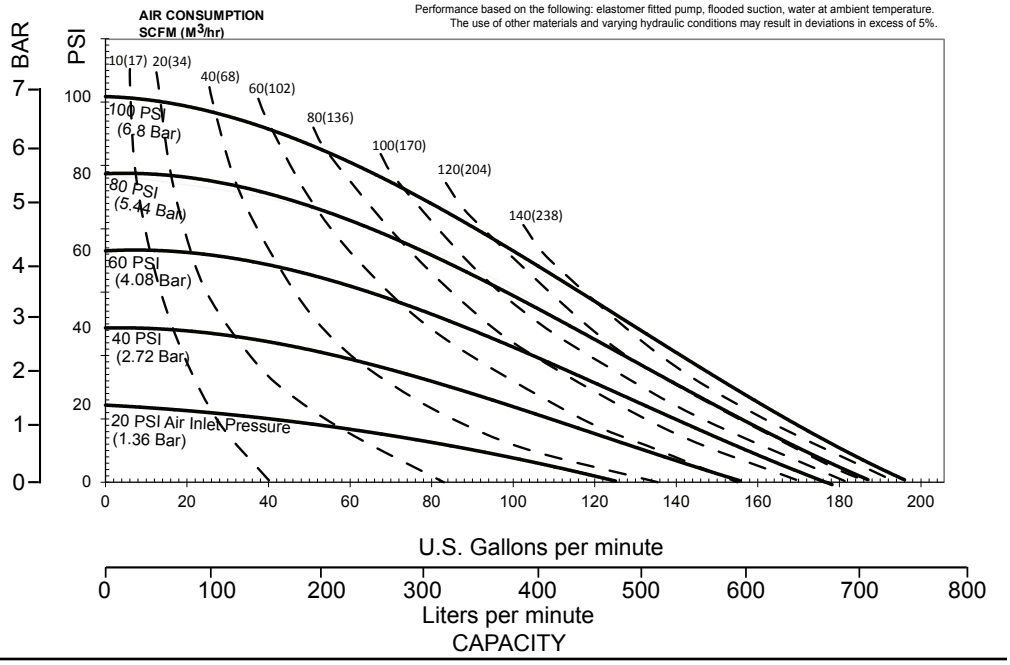

Materials

Material Profile:	Operating Temperatures:	
⚠ *CAUTION! Operating temperature limitations are as follows:*	Max.	Min.
FKM: (Fluorocarbon) Shows good resistance to a wide range of oils and solvents; especially all aliphatic, aromatic and halogenated hydrocarbons, acids, animal and vegetable oils. Hot water or hot aqueous solutions (over 70°F(21°C)) will attack FKM.	350°F 177°C	-40°F -40°C
Nitrile: General purpose, oil-resistant. Shows good solvent, oil, water and hydraulic fluid resistance. Should not be used with highly polar solvents like acetone and MEK, ozone, chlorinated hydrocarbons and nitro hydrocarbons.	190°F 88°C	-10°F -23°C
Maximum and Minimum Temperatures are the limits for which these materials can be operated. Temperatures coupled with pressure affect the longevity of diaphragm pump components. Maximum life should not be expected at the extreme limits of the temperature ranges.		
Metals:		
Stainless Steel: Equal to or exceeding ASTM specification A743 CF-8M for corrosion resistant iron chromium, iron chromium nickel and nickel based alloy castings for general applications. Commonly referred to as 316 Stainless Steel in the pump industry.		

For specific applications, always consult the Chemical Resistance Chart.

Dimensional Drawings

G20F Metallic

Dimensions in inches (metric dimensions in brackets). Dimensional Tolerance .125" (3mm).

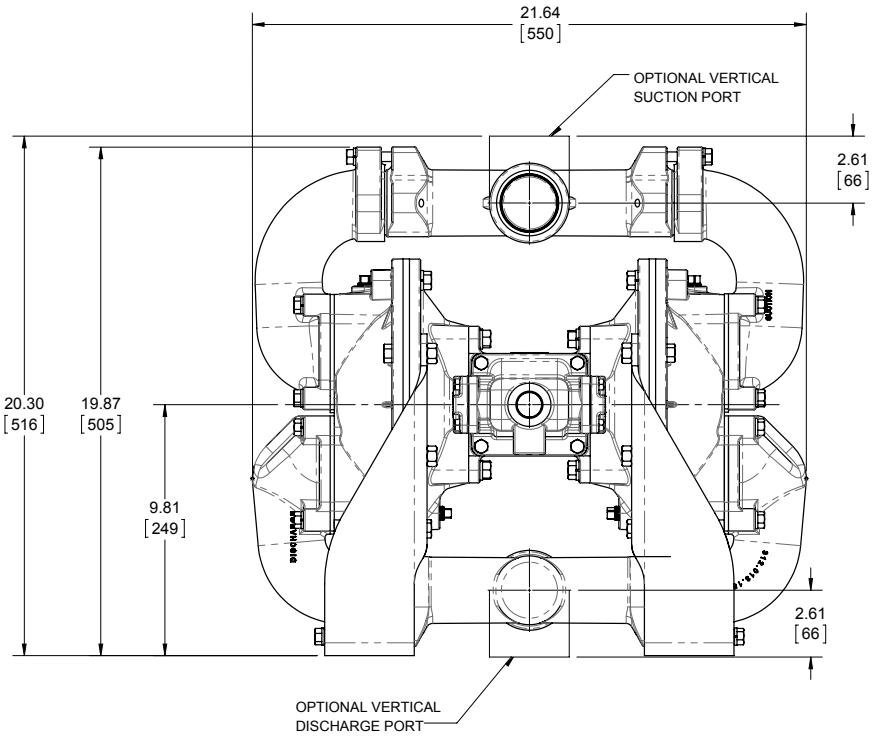

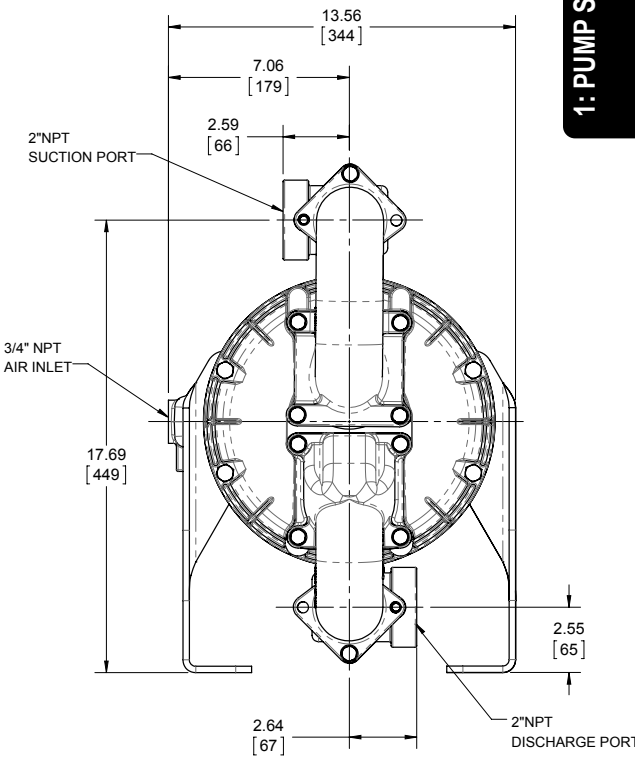

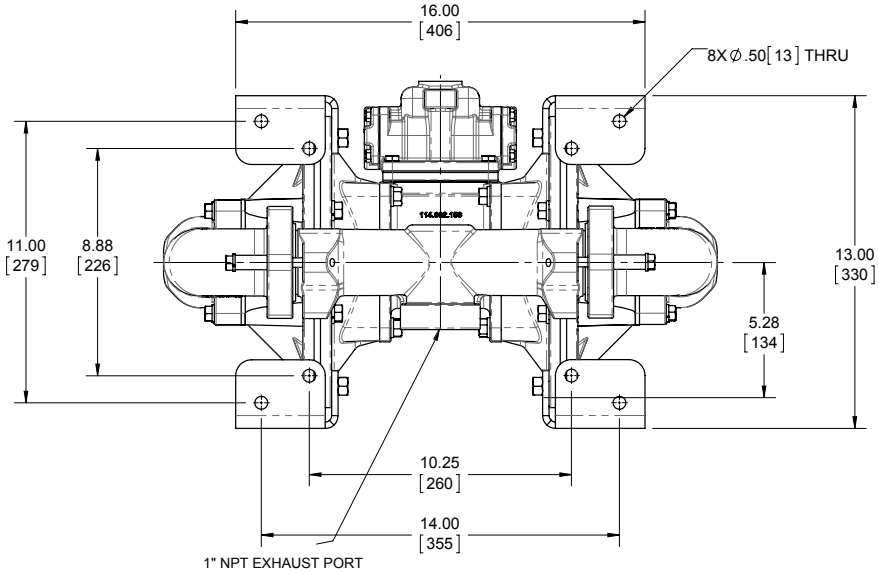

Principle of Pump Operation

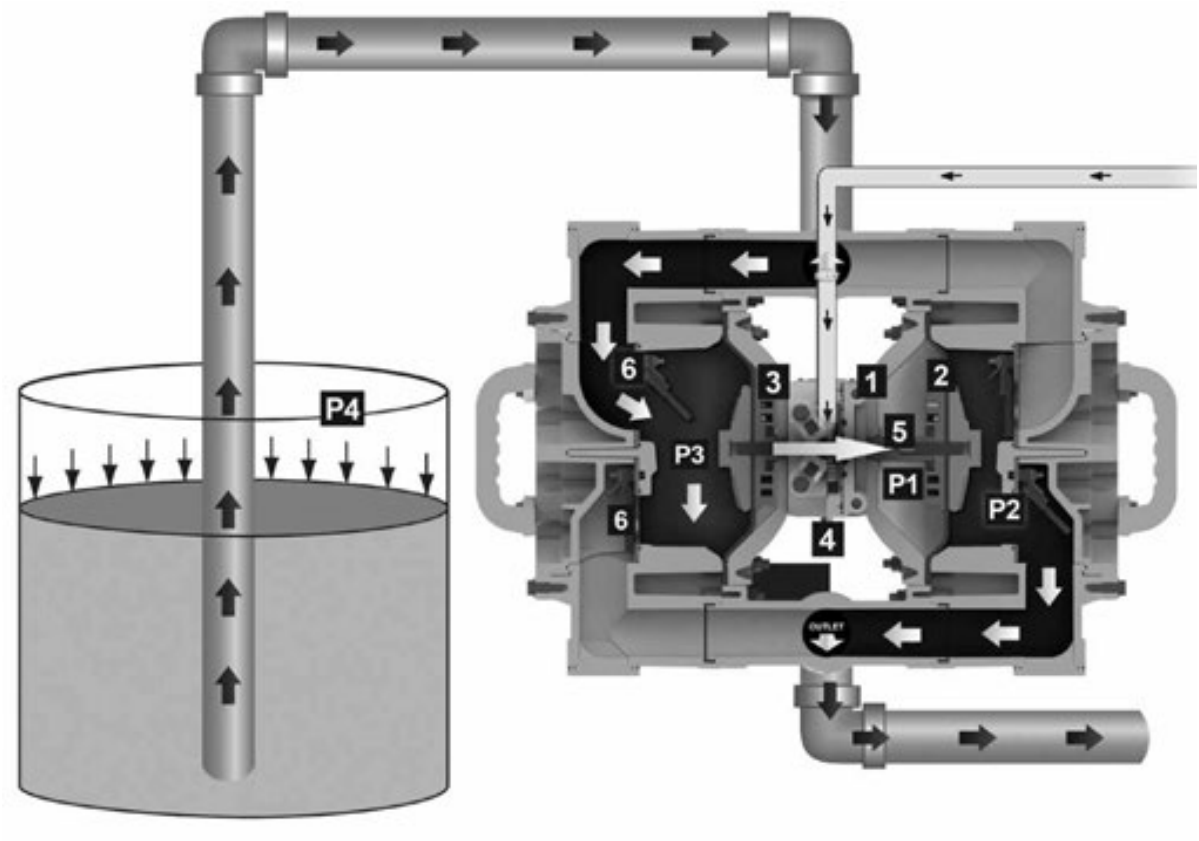

Air-Operated Double Diaphragm (AODD) pumps are powered by compressed air, natural gas or nitrogen.

The main directional (air) control valve ① distributes compressed air to an air chamber, exerting uniform pressure over the inner surface of the diaphragm ②. At the same time, the exhausting air ③ from behind the opposite diaphragm is directed through the air valve assembly(s) to an exhaust port ④.

As inner chamber pressure **(P1)** exceeds liquid chamber pressure **(P2)**, the rod ⑤ connected diaphragms shift together creating discharge on one side and suction on the opposite side. The discharged and primed liquid's directions are controlled by the check valves (ball or flap)⑥ orientation.

The pump primes as a result of the suction stroke. The suction stroke lowers the chamber pressure **(P3)** increasing the chamber volume. This results in a pressure differential necessary for atmospheric pressure **(P4)** to push the fluid through the suction piping and across the suction side check valve and into the outer fluid chamber ⑦.

Suction (side) stroking also initiates the reciprocating (shifting, stroking or cycling) action of the pump. The suction diaphragm's movement is mechanically pulled through its stroke. The diaphragm's inner plate makes contact with an actuator plunger aligned to shift the pilot signaling valve. Once actuated, the pilot valve sends a pressure signal to the opposite end of the main directional air valve, redirecting the compressed air to the opposite inner chamber.

Recommended Installation Guide

① **020.064.000 Filter**
VENTING WARNING: This filter is equipped with a stainless steel manual drain. The port is 1/8" NPT. When draining moisture from the filter, first shut off the natural gas supply.

② **020.059.000 REGULATOR WITH GAGE**
PRESSURE WARNING: This regulator is to be installed at point of use with the pump. The maximum gas supply is 400psi. Full line pressure needs to be regulated below 400psi prior to the regulator installation position.

VENTING WARNING: This regulator is equipped with a 1/4" NPT vent port. In the event of a diaphragm rupture, natural gas can be exhausted into the surrounding environment. Connect a conductive hose or pipe to the vent port to send the escaping natural gas to a safe area for gas reclamation. Make sure to ground the regulator, hose, and/or pipe.

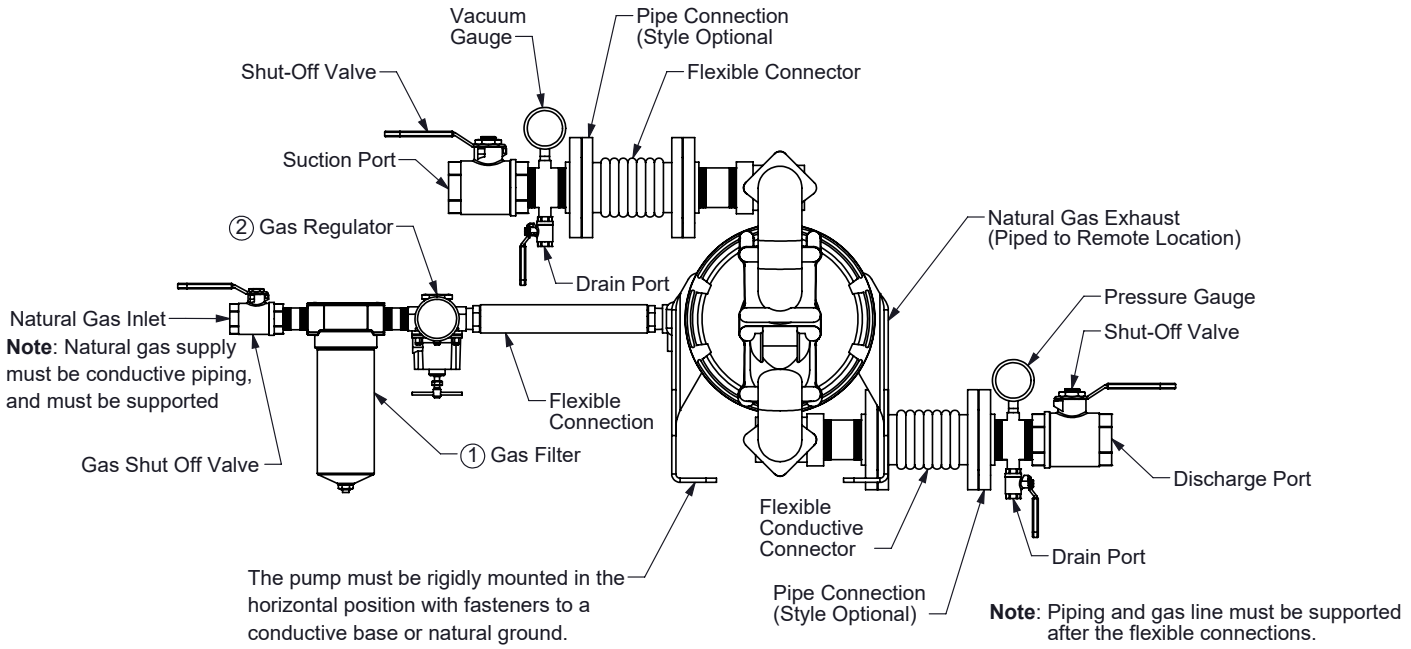

Installation And Start-Up
Locate the pump as close to the product being pumped as possible. Keep the suction line length and number of fittings to a minimum. Do not reduce the suction line diameter.

Gas Supply
Connect the pump gas inlet to a gas supply with sufficient capacity and pressure to achieve desired performance. A pressure regulating valve should be installed to insure gas supply pressure does not exceed recommended limits.

Gas Valve Lubrication
The gas distribution system is designed to operate WITHOUT lubrication. This is the standard mode of operation. If lubrication is desired, install a gas line lubricator set to deliver one drop of SAE 10 non-detergent oil for every 20 SCFM (9.4 liters/sec.) of gas the pump consumes. Consult the Performance Curve to determine gas consumption.

Gas Line Moisture
Water in the compressed gas supply may cause icing or freezing of the exhaust gas, causing the pump to cycle erratically or stop operating. Water in the gas supply can be reduced by using a point-of-use gas dryer.

Gas Inlet And Priming
To start the pump, slightly open the gas shut-off valve. After the pump primes, the gas valve can be opened to increase gas flow as desired. If opening the valve increases cycling rate, but does not increase the rate of flow, cavitation has occurred. The valve should be closed slightly to obtain the most efficient gas flow to pump flow ratio.

CAUTION

The gas exhaust should be piped to an area for safe disposition of the product being pumped, in the event of a diaphragm failure.

Troubleshooting Guide

Symptom:	Potential Cause(s):	Recommendation(s):
Pump Cycles Once	Deadhead (system pressure meets or exceeds gas supply pressure).	Increase the inlet gas pressure to the pump. Pump is designed for 1:1 pressure ratio at zero flow. (Does not apply to high pressure 2:1 units).
	Gas valve or intermediate gaskets installed incorrectly.	Install gaskets with holes properly aligned.
	Bent or missing actuator plunger.	Remove pilot valve and inspect actuator plungers.
Pump Will Not Operate / Cycle	Pump is over lubricated.	Set lubricator on lowest possible setting or remove. Units are designed for lube free operation.
	Lack of gas (line size, PSI, CFM).	Check the gas line size and length, compressor capacity (HP vs. cfm required).
	Check gas distribution system.	Disassemble and inspect main gas distribution valve, pilot valve and pilot valve actuators.
	Discharge line is blocked or clogged manifolds.	Check for inadvertently closed discharge line valves. Clean discharge manifolds/piping.
	Deadhead (system pressure meets or exceeds gas supply pressure).	Increase the inlet gas pressure to the pump. Pump is designed for 1:1 pressure ratio at zero flow. (Does not apply to high pressure 2:1 units).
	Blocked gas exhaust muffler.	Remove muffler screen, clean or de-ice, and re-install.
	Pumped fluid in gas exhaust muffler.	Disassemble pump chambers. Inspect for diaphragm rupture or loose diaphragm plate assembly.
	Pump chamber is blocked.	Disassemble and inspect wetted chambers. Remove or flush any obstructions.
Pump Cycles and Will Not Prime or No Flow	Cavitation on suction side.	Check suction condition (move pump closer to product).
	Check valve obstructed. Flap valve(s) not seating properly or sticking.	Disassemble the wet end of the pump and manually dislodge obstruction in the check valve pocket. Clean out around flap valve(s) and valve seat area. Replace flap valve(s) or valve seat if damaged.
	Flap valve(s)/seat(s) damaged or attacked by product.	Check Chemical Resistance Guide for compatibility.
	Check valve and/or seat is worn or needs adjusting.	Inspect check valves and seats for wear and proper setting. Replace if necessary.
	Suction line is blocked.	Remove or flush obstruction. Check and clear all suction screens or strainers.
	Excessive suction lift.	For lifts exceeding 20' of liquid, filling the chambers with liquid will prime the pump in most cases.
	Suction side gas leakage or gas in product.	Visually inspect all suction-side gaskets and pipe connections.
	Pumped fluid in gas exhaust.	Disassemble pump chambers. Inspect for diaphragm rupture or loose diaphragm plate assembly.
Pump Cycles Running Sluggish / Stalling, Flow Unsatisfactory	Over lubrication.	Set lubricator on lowest possible setting or remove. Units are designed for lube free operation.
	Icing.	De-ice, and re-install. Install a point of use gas drier.
	Clogged manifolds.	Clean manifolds to allow proper gas flow.
	Deadhead (system pressure meets or exceeds gas supply pressure).	Increase the inlet gas pressure to the pump. Pump is designed for 1:1 pressure ratio at zero flow. (Does not apply to high pressure 2:1 units).
	Cavitation on suction side.	Check suction (move pump closer to product).
	Lack of gas (line size, PSI, CFM).	Check the gas line size, length, compressor capacity.
	Excessive suction lift.	For lifts exceeding 20' of liquid, filling the chambers with liquid will prime the pump in most cases.
	Gas supply pressure or volume exceeds system hd.	Decrease inlet gas (press. and vol.) to the pump. Pump is cavitating the fluid by fast cycling.
	Undersized suction line.	Meet or exceed pump connections.
	Restrictive or undersized gas line.	Install a larger gas line and connection.
	Suction side gas leakage or gas in product.	Visually inspect all suction-side gaskets and pipe connections.
	Suction line is blocked.	Remove or flush obstruction. Check and clear all suction screens or strainers.
	Pumped fluid in gas exhaust muffler.	Disassemble pump chambers. Inspect for diaphragm rupture or loose diaphragm plate assembly.
	Check valve obstructed.	Disassemble the wet end of the pump and manually dislodge obstruction in the check valve.
	Check valve and/or seat is worn or needs adjusting.	Inspect check valves and seats for wear and proper setting. Replace if necessary.
	Entrained gas or vapor lock in chamber(s).	Purge chambers through tapped chamber vent plugs. Purging the chambers of gas can be dangerous.
Product Leaking Through Exhaust	Diaphragm failure, or diaphragm plates loose.	Replace diaphragms, check for damage and ensure diaphragm plates are tight.
	Diaphragm stretched around center hole or bolt holes.	Check for excessive inlet pressure or gas pressure. Consult Chemical Resistance Chart for compatibility with products, cleaners, temperature limitations and lubrication.
Premature Diaphragm Failure	Cavitation.	Enlarge pipe diameter on suction side of pump.
	Excessive flooded suction pressure.	Move pump closer to product. Raise pump/place pump on top of tank to reduce inlet pressure. Install Back pressure device (Tech bulletin 41r). Add accumulation tank or pulsation dampener.
	Misapplication (chemical/physical incompatibility).	Consult Chemical Resistance Chart for compatibility with products, cleaners, temperature limitations and lubrication.
	Incorrect diaphragm plates or plates on backwards, installed incorrectly or worn.	Check Operating Manual to check for correct part and installation. Ensure outer plates have not been worn to a sharp edge.
Unbalanced Cycling	Excessive suction lift.	For lifts exceeding 20' of liquid, filling the chambers with liquid will prime the pump in most cases.
	Undersized suction line.	Meet or exceed pump connections.
	Pumped fluid in gas exhaust muffler.	Disassemble pump chambers. Inspect for diaphragm rupture or loose diaphragm plate assembly.
	Suction side gas leakage or gas in product.	Visually inspect all suction-side gaskets and pipe connections.
	Check valve obstructed.	Disassemble the wet end of the pump and manually dislodge obstruction in the check valve pocket.
	Check valve and/or seat is worn or needs adjusting.	Inspect check valves and seats for wear and proper setting. Replace if necessary.
	Entrained gas or vapor lock in chamber(s).	Purge chambers through tapped chamber vent plugs.

For additional troubleshooting tips contact After Sales Support at service.warrenrupp@idexcorp.com or 419-524-8388

Composite Repair Parts Drawing

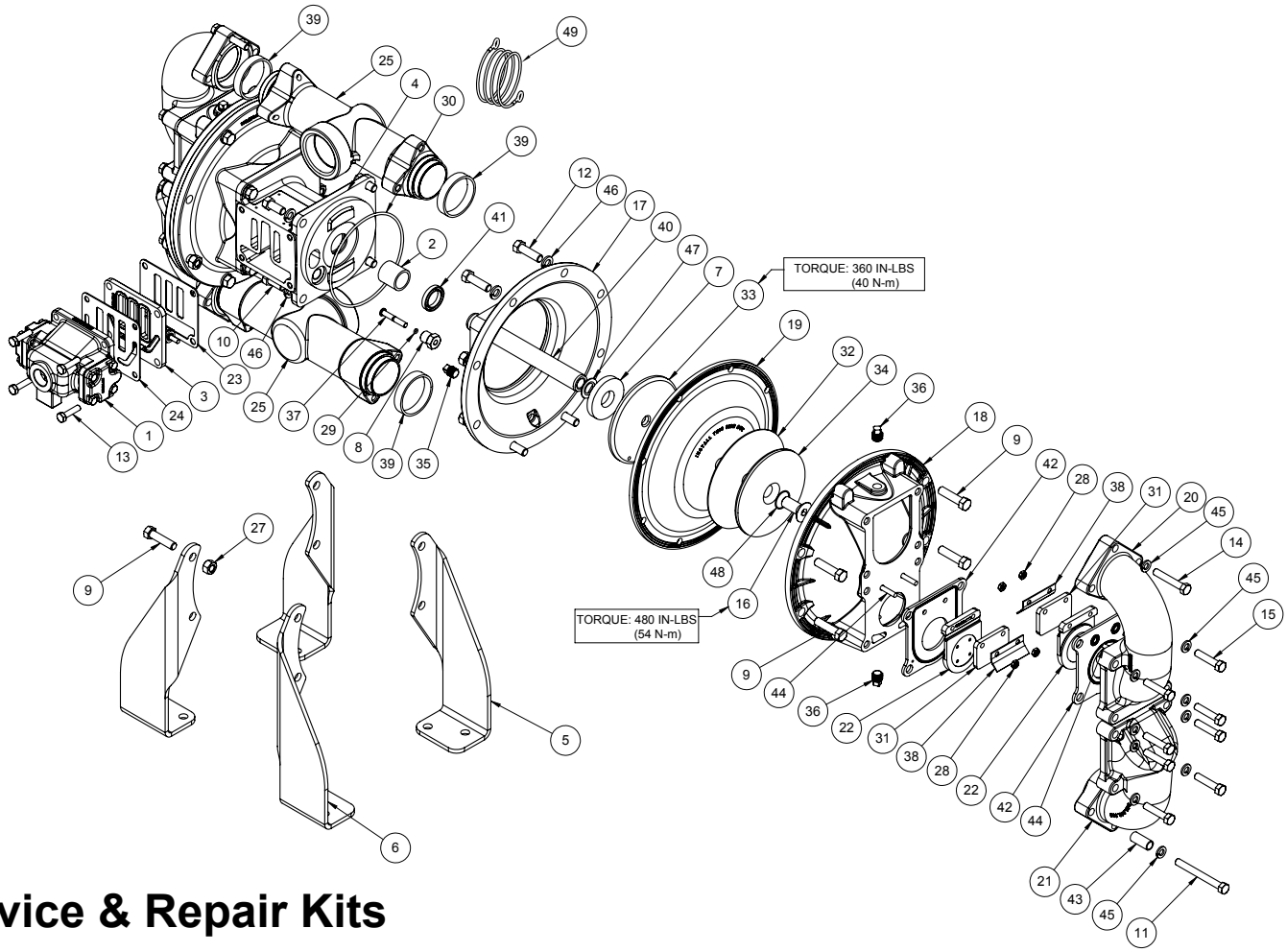

Service & Repair Kits

476.359.360 **Nitrile Gas End Kit**
Nitrile Seals, Bumpers, O-rings, and Gaskets, Retaining Rings, Plungers, Bushings Gas Valve Assembly with Nitrile O-rings Pilot Valve Assembly with O-rings

476.359.363 **FKM Gas End Kit**
FKM Seals, Bumpers and O-rings, Nitrile Gaskets, Retaining Rings, Plungers, Bushings
Gas Valve Assembly with FKM O-rings
Pilot Valve Assembly with FKM O-rings

476.360.360 **Nitrile Gas End Wear Kit**
Nitrile Seals, Bumpers, O-rings, and Gaskets, Retaining Rings, Plungers, Bushings

476.360.363 **FKM Gas End Wear Kit**
FKM Seals, Bumpers and O-rings, Nitrile Gaskets, Retaining Rings, Plungers, Bushings

476.270.360 **Nitrile Wet End Kit**
Diaphragms, Flap Valves, Hinge Pads, Wear Pads, Sealing Rings, and Stato-Seals

476.270.363 **FKM Wet End Kit**
Diaphragms, Flap Valves, Hinge Pads, Wear Pads, Sealing Rings, and Stato-Seals

Composite Repair Parts List

Item	Part Number	Description	Qty
(1*)	031.208.360	Air Valve Assy (with Nitrile O-rings)	1
	031.208.363	Air Valve Assy (with FKM O-rings)	1
2	070.006.571	Bushing, Intermediate (included in item #4)	2
(3)	095.073.002	Pilot Valve Assy (with Nitrile O-rings)	1
	095.073.363	Pilot Valve Assy (with FKM O-rings)	1
4	114.002.156 G	Intermediate (w/ aluminum center)	1
5	115.158.080	Bracket, Leg	2
6	115.159.080	Bracket, Leg	2
7	132.002.360	Bumper, Diaphragm (with Nitrile O-rings)	2
	132.002.363	Bumper, Diaphragm (with FKM O-rings)	2
(8)	135.016.506	Bushing, Plunger	2
9	170.023.330	Capscrew, Hx-Hd 7/16-14 x 1.75 (Aluminum wetted)	8
	170.023.330	Capscrew, Hx-Hd 7/16-14 x 1.75 (CI and SS wetted)	16
10	170.024.330	Capscrew, Hx-Hd 7/16-14 x 1.00	8
11	170.026.330	Capscrew, Hx-Hd 3/8-16 x 3.50	2
12	170.035.330	Capscrew, Hx-Hd 7/16-14 x 1.50 (Aluminum wetted)	8
13	170.045.330	Capscrew, Hx-Hd 5/16-18 x 1.25	4
14	170.052.330	Capscrew, Hx-Hd 3/8-16 x 2.25	2
15	170.061.330	Capscrew, Hx-Hd 3/8-16 x 2.00	16
16	171.002.330	Capscrew, Socket, Fl-Hd 5/8-11 x 1.50 (Alum/CI Wetted)	2
	171.002.110	Capscrew, Socket, Fl-Hd 5/8-11 x 1.50 (Stainless Wetted)	2
17	196.001.157	Chamber, Inner (w/ aluminum center) Includes #35	2
18	196.002.157NS	Chamber, Outer (w/ aluminum wetted) Includes #36,44	4
	196.002.110NS	Chamber, Outer (w/ stainless wetted) Includes #36,44	4
[19]	286.007.360	Diaphragm - Buna	2
	286.007.363	Diaphragm - FKM	2
20	312.012.156	Elbow, Suction (w/ aluminum wetted) includes item #44)	2
	312.012.110	Elbow, Suction (w/ stainless wetted) includes item #44)	2
21	312.013.156	Elbow, Discharge (w/ aluminum wetted)	2
	312.013.110	Elbow, Discharge (w/ stainless wetted)	2
[22]	338.005.360	Valve, Flap Assembly - Buna	4
	338.005.363	Valve, Flap Assembly - FKM	4
(23)	360.041.379	Gasket, Pilot Valve	1
(24)	360.048.360	Gasket, Air Valve	1
25	518.001.157	Manifold (w/ aluminum wetted)	2
	518.001.110	Manifold (w/ stainless wetted)	2
27	545.007.330	Nut, Hex 7/16-14 (aluminum wetted only)	8
	545.007.110	Nut, Hex 7/16-14 (stainless wetted only)	8
28	547.002.110	Nut, Nylon Stop 1/4 x 20	8
(29)	560.001.360	O-ring (Buna)	2
	560.001.363	O-ring (FKM)	2
(30)	560.022.360	O-ring (Buna)	2
	560.022.363	O-ring (FKM)	2
[31]	570.001.360	Pad, Hinge - Buna	4
	570.001.363	Pad, Hinge - FKM	4
[32]	570.009.360	Pad, Wear - Buna	2
	570.009.363	Pad, Wear - FKM	2
33	612.047.330	Plate, Inner Diaphragm	2
34	612.008.330	Plate, Outer Diaphragm (w/ aluminum/cast iron wetted)	2
	612.096.110	Plate, Outer Diaphragm (w/ stainless wetted)	2
35	618.003.330	Plug, Pipe 1/4" NPT	2
36	618.003.330	Plug, Pipe 1/4" NPT (w/ aluminum wetted)	4
	618.003.110	Plug, Pipe 1/4" NPT (w/ stainless wetted)	4
(37)	620.011.114	Plunger, Actuator	2
[38]	670.005.110	Retainer, Flap Valve	4
[39]	675.013.360	Ring, Sealing - Buna	4
	675.013.363	Ring, Sealing - FKM	4
40	685.007.120	Rod, Diaphragm	1
(41)	720.004.360	Seal, U-Cup - Buna	2
	720.004.363	Seal, U-Cup - FKM	2
42	722.070.360	Seat, Check Valve - Buna	4
	722.070.363	Seat, Check Valve - FKM	4
43	770.005.115	Spacer (w/ aluminum wetted)	2
44	807.018.110	Stud, 1/4-20 (inlcuded with item #18 & #20)	8
45	900.005.330	Washer, Lock 3/8"	20
46	900.006.330	Washer, Lock 7/16" (w/ aluminum wetted)	16
	900.006.330	Washer, Lock 7/16" (w/ stainless wetted)	8
[47]	902.003.000	Washer, Sealing	2
48	560.046.360	O-ring (w/ stainless steel wetted - Buna)	2
	560.070.610	O-ring (w/ stainless steel wetted - FKM)	2
49	902.025.000	Cable, Grounding	1

LEGEND:

◯ = Items contained within Air End Kits

□ = Items contianed within Wet End Kits

* Air end kit contains sleeve and spool set only, not complete air valve assembly

Note: *Kits contain components specific to the material codes.*

ATEX Compliant

Material Codes - The Last 3 Digits of Part Number

000.....Assembly, sub-assembly; and some purchased items
010.....Cast Iron
015.....Ductile Iron
020.....Ferritic Malleable Iron
080.....Carbon Steel, AISI B-1112
110.....Alloy Type 316 Stainless Steel
111 .....Alloy Type 316 Stainless Steel (Electro Polished)
112.....Alloy C
113.....Alloy Type 316 Stainless Steel (Hand Polished)
114.....303 Stainless Steel
115.....302/304 Stainless Steel
117.....440-C Stainless Steel (Martensitic)
120.....416 Stainless Steel (Wrought Martensitic)
148.....Hardcoat Anodized Aluminum
150.....6061-T6 Aluminum
152.....2024-T4 Aluminum (2023-T351)
155.....356-T6 Aluminum
156.....356-T6 Aluminum
157.....Die Cast Aluminum Alloy #380
158.....Aluminum Alloy SR-319
162.....Brass, Yellow, Screw Machine Stock
165.....Cast Bronze, 85-5-5-5
166.....Bronze, SAE 660
170.....Bronze, Bearing Type, Oil Impregnated
180.....Copper Alloy
305.....Carbon Steel, Black Epoxy Coated
306.....Carbon Steel, Black PTFE Coated
307.....Aluminum, Black Epoxy Coated
308.....Stainless Steel, Black PTFE Coated
309.....Aluminum, Black PTFE Coated
313.....Aluminum, White Epoxy Coated
330.....Zinc Plated Steel
332.....Aluminum, Electroless Nickel Plated
333.....Carbon Steel, Electroless Nickel Plated
335.....Galvanized Steel
337.....Silver Plated Steel
351.....Food Grade Santoprene®
353.....Geolast; Color: Black
354.....Injection Molded #203-40 Santoprene® Duro 40D +/-5; Color: RED
356.....Hytrel®
357.....Injection Molded Polyurethane
358.....Urethane Rubber (Some Applications) (Compression Mold)
359.....Urethane Rubber
360.....Nitrile Rubber Color coded: RED
363.....FKM (Fluorocarbon) Color coded: YELLOW
364.....EPDM Rubber Color coded: BLUE
365.....Neoprene Rubber Color coded: GREEN
366.....Food Grade Nitrile
368.....Food Grade EPDM
371.....Philthane (Tuftane)
374.....Carboxylated Nitrile
375.....Fluorinated Nitrile
378.....High Density Polypropylene
379.....Conductive Nitrile
408.....Cork and Neoprene
425.....Compressed Fibre
426.....Blue Gard
440.....Vegetable Fibre
500.....Delrin® 500
502.....Conductive Acetal, ESD-800
503.....Conductive Acetal, Glass-Filled
506.....Delrin® 150
520.....Injection Molded PVDF Natural color
540.....Nylon
542.....Nylon
544.....Nylon Injection Molded
550.....Polyethylene
551.....Glass Filled Polypropylene
552.....Unfilled Polypropylene
555.....Polyvinyl Chloride
556.....Black Vinyl
557.....Conductive Polypropylene
558.....Conductive HDPE
570.....Rulon II®
580.....Ryton®
600.....PTFE (virgin material) Tetrafluorocarbon (TFE)
603.....Blue Gylon®
604.....PTFE
606.....PTFE
607.....Envelon
608.....Conductive PTFE
610.....PTFE Encapsulated Silicon
611.....PTFE Encapsulated FKM
632.....Neoprene/Hytrel®
633.....FKM/PTFE
634.....EPDM/PTFE
635.....Neoprene/PTFE
637.....PTFE, FKM/PTFE
638.....PTFE, Hytrel®/PTFE
639.....Nitrile/TFE
643.....Santoprene®/EPDM
644.....Santoprene®/PTFE
656.....Santoprene® Diaphragm and Check Balls/EPDM Seats
661.....EPDM/Santoprene®
666.....FDA Nitrile Diaphragm, PTFE Overlay, Balls, and Seals
668.....PTFE, FDA Santoprene®/PTFE

- Delrin and Hytrel are registered tradenames of E.I. DuPont.
- Nylatron is a registered tradename of Polymer Corp.
- Gylon is a registered tradename of Garlock, Inc.
- Santoprene is a registered tradename of Exxon Mobil Corp.
- Rulon II is a registered tradename of Dixion Industries Corp.
- Ryton is a registered tradename of Phillips Chemical Co.
- Valox is a registered tradename of General Electric Co.

RECYCLING

Many components of SANDPIPER® AODD pumps are made of recyclable materials. We encourage pump users to recycle worn out parts and pumps whenever possible, after any hazardous pumped fluids are thoroughly flushed.

Air Distribution Valve Assembly

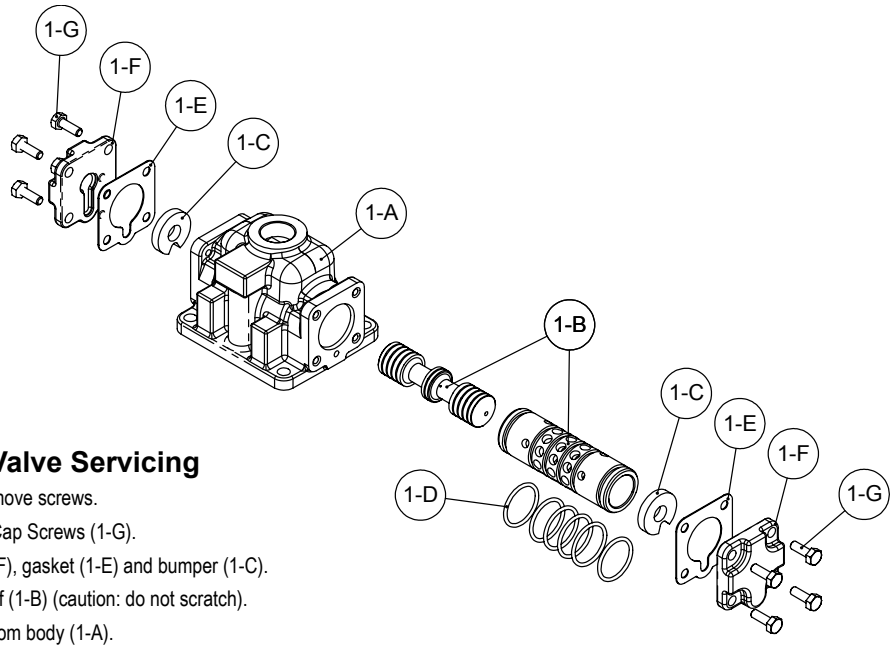

Air Distribution Valve Servicing

See repair parts drawing, remove screws.

Step 1: Remove Hex Head Cap Screws (1-G).

Step 2: Remove end cap (1-F), gasket (1-E) and bumper (1-C).

Step 3: Remove spool part of (1-B) (caution: do not scratch).

Step 4: Press sleeve (1-B) from body (1-A).

Step 5: Inspect O-Ring (1-D) and replace if necessary.

Step 6: Lightly lubricate O-Rings (1-D) on sleeve (1-B).

Step 7: Press sleeve (1-B) into body (1-A).

Step 8: Reassemble in reverse order, starting with step 3.

Note: Sleeve and spool (1-B) set is match ground to a specified clearance sleeve and spools (1-B) cannot be interchanged.

MAIN GAS VALVE ASSEMBLY - BUNA O-RINGS

Item	Part Number	Description	Qty
1	031.208.360	Air Valve Assembly	1
1-A	095.043.156	Body, Air Valve	1
(1-B)	031.012.000	Sleeve and Spool Set	1
(1-C)	132.014.358	Bumper	2
(1-D)	560.020.360	O-Ring	6
(1-E)	360.010.360	Gasket	2
1-F	165.011.157	End Cap	2
1-G	170.032.330	Hex Head Capscrew	8

MAIN GAS VALVE ASSEMBLY - FKM O-RINGS

Item	Part Number	Description	Qty
1	031.208.363	Air Valve Assembly-FKM	1
1-A	095.043.156	Body, Air Valve	1
(1-B)	031.012.000	Sleeve and Spool Set	1
(1-C)	132.014.358	Bumper	2
(1-D)	560.020.363	O-Ring-FKM	6
(1-E)	360.010.363	Gasket-FKM	2
1-F	165.011.157	End Cap	2
1-G	170.032.330	Hex Head Capscrew	8

LEGEND:

◯ = Items contained within Air End Kits

Note: *Kits contain components specific to the material codes.*

IMPORTANT



Read these instructions completely, before installation and start-up. It is the responsibility of the purchaser to retain this manual for reference. Failure to comply with the recommendations stated in this manual will damage the pump, and void factory warranty.

Pilot Valve Assembly

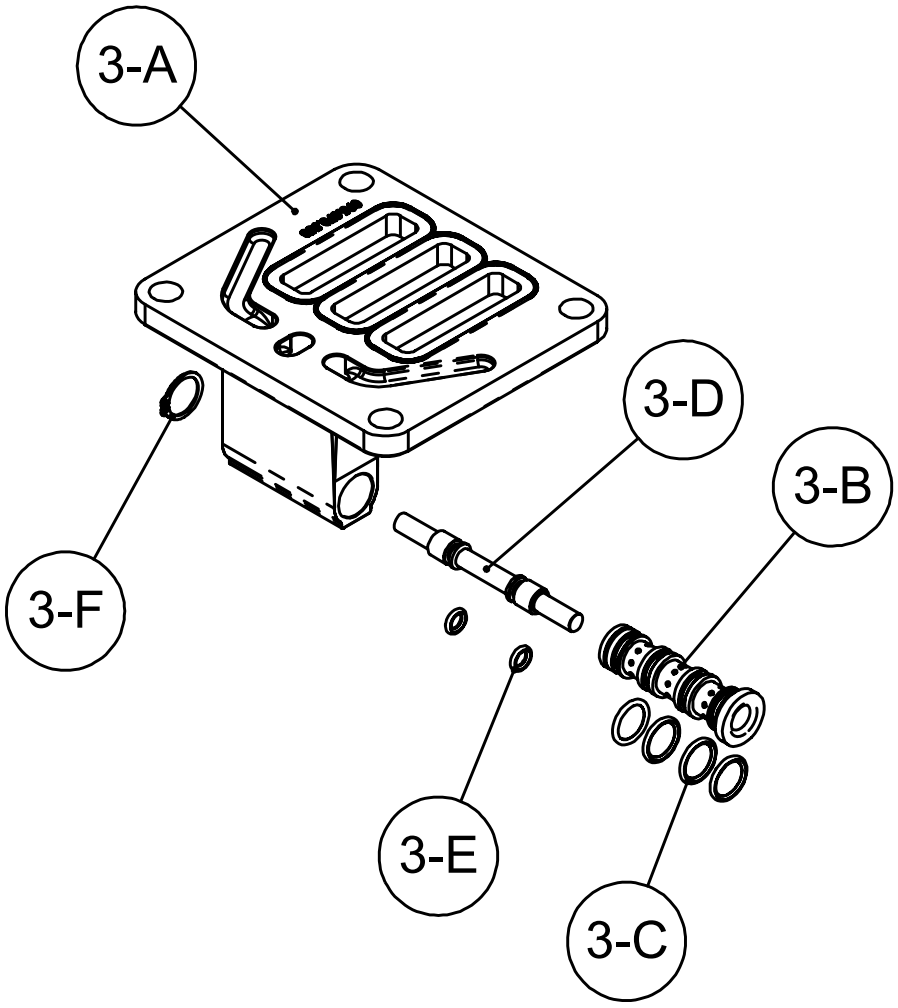

Pilot Valve Servicing

With Pilot Valve removed from pump.

Step 1: Remove snap ring (3-F).

Step 2: Remove sleeve (3-B), inspect O-Rings (3-C), replace if required.

Step 3: Remove spool (3-D) from sleeve (3-B), inspect O-Rings (3-E), replace if required.

Step 4: Lightly lubricate O-Rings (3-C) and (3-E).

Reassemble in reverse order.

Pilot Valve Assembly with Nitrile O-rings

Item	Part Number	Description	Qty
3	095.073.002	Gas Pilot Valve Assembly	1
3A	095.070.558	Gas Pilot Valve Body	1
3B	755.025.001	Pilot Valve Sleeve Assembly	1
3C	560.033.360	O-Ring	4
3D	775.026.000	Pilot Valve Spool Assembly	1
3E	560.023.360	O-Ring	2
3F	675.037.080	Retaining Ring	1

Pilot Valve Assembly with FKM O-rings

Item	Part Number	Description	Qty
3	095.073.363	Gas Pilot Valve Assembly	1
3A	095.070.558	Gas Pilot Valve Body	1
3B	755.025.363	Pilot Valve Sleeve Assembly	1
3C	560.033.363	O-Ring	4
3D	775.026.363	Pilot Valve Spool Assembly	1
3E	560.023.363	O-Ring	2
3F	675.037.080	Retaining Ring	1

Diaphragm Servicing

Step 1: With manifolds and outer chambers removed, remove diaphragm assemblies from diaphragm rod. **DO NOT** use a pipe wrench or similar tool to remove assembly from rod. Flaws in the rod surface may damage bearings and seal. Soft jaws in a vise are recommended to prevent diaphragm rod damage.

Step 1.A: NOTE: Not all inner diaphragm plates are threaded. Some models utilize a through hole in the inner diaphragm plate. If required to separate diaphragm assembly, place assembly in a vise, gripping on the exterior cast diameter of the inner plate. Turn the outer plate clockwise to separate the assembly.

Always inspect diaphragms for wear cracks or chemical attack. Inspect inner and outer plates for deformities, rust scale and wear. Inspect intermediate bearings for elongation and wear. Inspect diaphragm rod for wear or marks.
Clean or repair if appropriate. Replace as required.

Step 2: Reassembly: There are two different types of diaphragm plate assemblies utilized throughout the Sandpiper product line: Outer plate with a threaded stud, diaphragm, and a threaded inner plate.

Outer plate with a threaded stud, diaphragm, and an inner plate with through hole. Secure threaded inner plate in a vise. Ensure that the plates are being installed with the outer radius against the diaphragm.

Step 3: Lightly lubricate, with a compatible material, the inner faces of both outer and inner diaphragm plates when using on non Overlay diaphragms (For EPDM water is recommended). No lubrication is required.

Step 4: Push the threaded outer diaphragm plate through the center hole of the diaphragm. **Note:** Most diaphragms are installed with the natural bulge out towards the fluid side. S05, S07, and S10 non–metallic units are installed with the natural bulge in towards the gas side.

Step 5: Thread or place, outer plate stud into the inner plate. For threaded inner plates, use a torque wrench to tighten the assembly together. Torque values are called out on the exploded view.

Repeat procedure for second side assembly. Allow a minimum of 15 minutes to elapse after torquing, then re-torque the assembly to compensate for stress relaxation in the clamped assembly.

Step 6: Thread one assembly onto the diaphragm rod with sealing washer (when used) and bumper.

Step 7: Install diaphragm rod assembly into pump and secure by installing the outer chamber in place and tightening the capscrews.

Step 8: On opposite side of pump, thread the remaining assembly onto the diaphragm rod. Using a torque wrench, tighten the assembly to the diaphragm rod. Align diaphragm through bolt holes, always going forward past the recommended torque. Torque values are called out on the exploded view. **NEVER** reverse to align holes, if alignment cannot be achieved without damage to diaphragm, loosen complete assemblies, rotate diaphragm and reassemble as described above.

⚠ IMPORTANT



Read these instructions completely, before installation and start-up. It is the responsibility of the purchaser to retain this manual for reference. Failure to comply with the recommendations stated in this manual will damage the pump, and void factory warranty.

Pumping Hazardous Liquids

When a diaphragm fails, the pumped liquid or fumes enter the natural gas end of the pump. Fumes are exhausted into the surrounding environment. When pumping hazardous or toxic materials, the exhaust gas must be piped to an appropriate area for safe disposal. See illustration #1 at right.

This pump can be submerged if the pump materials of construction are compatible with the liquid being pumped. The natural gas exhaust must be piped above the liquid level. See illustration #2 at right. Piping used for the gas exhaust must not be smaller than 1" (2.54 cm) diameter. Reducing the pipe size will restrict natural gas flow and reduce pump performance. When the pumped product source is at a higher level than the pump (flooded suction condition), pipe the exhaust gas higher than the product source to prevent siphoning spills. See illustration #3 at right.

IMPORTANT INSTALLATION NOTE: The manufacturer recommends installing a flexible conductive hose or connection between the pump and any rigid plumbing. This reduces stresses on the molded threads of the natural gas exhaust port. Failure to do so may result in damage to the natural gas distribution valve body.

Any piping or hose connected to the pump's natural gas exhaust port must be conductive and physically supported. Failure to support these connections could also result in damage to the valve body.

If a high pressure gas spike is possible through the exhaust line, a pressure regulator is required in the exhaust piping.

NATURAL GAS EXHAUST ILLUSTRATION

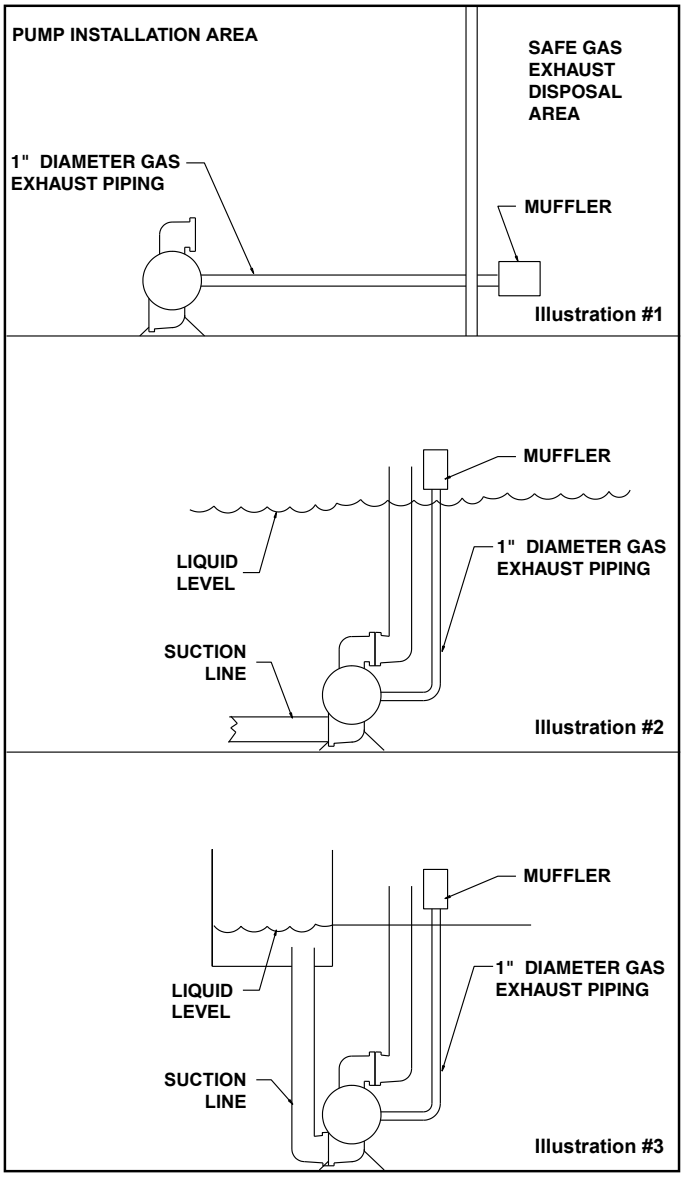

⚠ WARNING



Natural gas exhaust is to be vented to low pressure safe location using conductive Nitrile rubber hose or metal piping in accordance with local fire and environmental codes, or an industry or nationally recognized code having jurisdiction over specific installations, and/or CAN/CGA B149, Installation Codes.

5 - YEAR Limited Product Warranty

Warren Rupp, Inc. ("Warren Rupp") warrants to the original end-use purchaser that no product sold by Warren Rupp that bears a Warren Rupp brand shall fail under normal use and service due to a defect in material or workmanship within five years from the date of shipment from Warren Rupp's factory. Warren Rupp brands include Warren Rupp®,SANDPIPER®, SANDPIPER Signature Series™, MARATHON®, Porta-Pump®, SludgeMaster™ and Tranquilizer®.

The use of non-OEM replacement parts will void (or negate) agency certifications, including CE, ATEX, CSA, 3A and EC1935 compliance (Food Contact Materials). Warren Rupp, Inc. cannot ensure nor warrant non-OEM parts to meet the stringent requirements of the certifying agencies.

~ See complete warranty at https://www.sandpiperpump.com/

SANDPIPER®

EC Declaration of Conformity

Manufacturer:
Warren Rupp, Inc.
800 N. Main Street
Mansfield, Ohio, 44902 USA

Certifies that Air-Operated Double Diaphragm Pump Models: DSB Series, DMF Series, G Series, HDB Series, HDF Series, HP Series, F Series, MS Series, S Series, SL Series, SP Series, SSB Series, T Series, U1F Series, WR Series; High Pressure Pump Models: EH Series, GH Series, SH Series; Submersible Pump Models: SMA3 Series, SPA Series; and Surge Dampener/ Suppressor Models: DA Series, TA Series comply with the European Community Directive 2006/42/EC on Machinery, according to Annex VIII. This product has used Harmonized Standard EN809:2012, Pumps and Pump Units for Liquids - Common Safety Requirements, to verify conformance.

October 3, 2022
DATE/APPROVAL/TITLE:

Technical File on record with:
DEKRA Certification B.V.
Meander 1051
6825 MJ Arnhem
The Netherlands

Signature of authorized person

Dennis Hall
Printed name of authorized person

Engineering Manager
Title

IDEX

CE

SANDPIPER®

EC Declaration of Conformity

Manufacturer:
Warren Rupp, Inc.
800 N. Main Street
Mansfield, Ohio, 44902 USA

Certifies that Air-Operated Double Diaphragm Pump Models: DSB Series, DMF Series, G Series, HDB Series, HDF Series, HP Series, F Series, MS Series, S Series, SL Series, SP Series, SSB Series, T Series, U1F Series, WR Series; High Pressure Pump Models: EH Series, GH Series, SH Series; Submersible Pump Models: SMA3 Series, SPA Series; and Surge Dampener/ Suppressor Models: DA Series, TA Series comply with the United Kingdom Statutory Instruments 2008 No. 1597, The Supply of Machinery (Safety) Regulations 2008, according to Annex VIII. This product has used Designated Standard EN809:2012, Pumps and Pump Units for Liquids - Common Safety Requirements, to verify conformance.

October 17, 2022
DATE/APPROVAL/TITLE:

Technical File on record with:
DEKRA Certification UK Limited
Stokenchurch House
Oxford Road
Stokenchurch
HP14 3SX

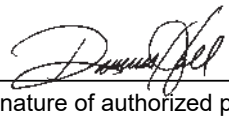
Signature of authorized person

Dennis Hall
Printed name of authorized person

Engineering Manager
Title

IDEX

UK CA

SANDPIPER®

ATEX

IDEX

EU Declaration of Conformity

Manufacturer:
Warren Rupp, Inc.
A Unit of IDEX Corporation
800 North Main Street
Mansfield, OH 44902 USA

This declaration of conformity is issued under the sole responsibility of the manufacturer. Warren Rupp, Inc. declares that Air Operated Double Diaphragm Pumps (AODD) and Surge Suppressors listed below comply with the requirements of Directive **2014/34/EU** and applicable harmonized standards.

Harmonized Standards:

- EN ISO 80079-36: 2016
- EN ISO 80079-37: 2016
- EN 60079-25: 2010

1. AODD Pumps and Surge Suppressors - Technical File on record with: DEKRA Certification B.V.
Meander 1051
6825 MJ Arnhem
The Netherlands

Hazardous Location Applied:



II 2 G Ex h IIC T5...225°C (T2) Gb
II 2 D Ex h IIIC T100°C...T200°C Db

- Metallic pump models with external aluminum components (DMF Series, EH Series, F Series, G & GH Series, HDB Series, HDF Series, MS Series, S Series, SH Series, SL Series, SPB Series, ST Series, T Series, and U1F Series)
- Conductive plastic pump models with integral muffler (PB1/4 Series, S Series, SL Series, SPE Series)
- Tranquilizer® surge suppressors (TA Series)



II 2 G Ex h IIB T5...225°C (T2) Gb
II 2 D Ex h IIIB T100°C...T200°C Db

- ST Series with sight tubes (VL) and HP Series because of the projected area of non-conductive external components

2. AODD Pumps - EU Type Examination Certificate No.: DEKRA 18ATEX0094X - DEKRA Certification B.V. (0344)
Meander 1051
6825 MJ Arnhem
The Netherlands

Hazardous Location Applied:



I M1 Ex h I Ma
II 1 G Ex h IIC T5...225°C (T2) Ga
II 1 D Ex h IIIC T100°C...T200°C Da

- Metallic pump models with no external aluminum (HDB Series, HDF Series, G Series, S Series, SPB Series)
- Conductive plastic pumps equipped with conductive muffler (S Series, SPE Series)



II 2 G Ex h ia IIC T5 Gb
II 2 D Ex h ia IIIC T100°C Db

- Pump models with ATEX rated pulse output kit option (HDB Series, HDF Series, PB1/4, S Series, SB Series)



II 2 G Ex h mb IIC T5 Gb
II 2 D Ex h mb tb IIIC T100° Db

- Pump model series S05, S1F, S15, S20, S30 equipped with ATEX rated integral solenoid option

➢ See “ATEX Details” page in user’s manual for more information
➢ See “Safety Information” page for conditions of safe use

DATE/APPROVAL/TITLE:
9 NOV 2023

Dennis Hall
Engineering Manager

B

SANDPIPER®

UKEx

IDEX

EU Declaration of Conformity

Manufacturer:

Warren Rupp, Inc.
A Unit of IDEX Corporation
800 North Main Street
Mansfield, OH 44902 USA

This declaration of conformity is issued under the sole responsibility of the manufacturer.
Warren Rupp, Inc declares that Air Operated Double Diaphragm Pumps (AODD) and Surge Suppressors listed below comply with the requirements of United Kingdom Statutory Instruments **2016 No. 1107** and all the applicable standards.

Designated Standards:

- EN ISO 80079-36: 2016
- EN ISO 80079-37: 2016
- EN 60079-25: 2010

1. AODD Pumps and Surge Suppressors - Technical File on record with: DEKRA Certification UK Limited
Stokenchurch House
Oxford Road
Stokenchurch
HP14 3SX

Hazardous Location Applied:



II 2 G Ex h IIC T5...225°C (T2) Gb
II 2 D Ex h IIIC T100°C...T200°C Db

- Metallic pump models with external aluminum components (DMF Series, EH Series, F Series, G & GH Series, HDB Series, HDF Series, MS Series, S Series, SH Series, SL Series, SPB Series, ST Series, T Series, and U1F Series)
- Conductive plastic pump models with integral muffler (PB1/4 Series, S Series, SL Series, SPE Series)
- Tranquilizer® surge suppressors (TA Series)



II 2 G Ex h IIB T5...225°C (T2) Gb
II 2 D Ex h IIIB T100°C...T200°C Db

- ST Series with sight tubes (VL) and HP Series because of the projected area of non-conductive external components

➢ See “ATEX Details” page in user’s manual for more information
➢ See “Safety Information” page for conditions of safe use

DATE/APPROVAL/TITLE:
9 NOV 2023

Dennis Hall
Engineering Manager