CALL TOLL FREE 877-742-2878 FOR SALES AND SUPPORT Return to BurtProcess.com

ASAHI/AMERICA, INC 655 ANDOVER STREET LAWRENCE, MA. 01843 TELEPHONE 800-343-3618

Quarter Master Chief Series 92 Actuator



Installation, Operation and Maintenance Manual

ASAHI/AMERICA®

Table of Contents

Series 92 Electric Actuator Introduction 3
Description 3
Electrical Requirement 3
Installation 4
Electrical 4
Type 21 Ball Valve 5
Type 23 Ball Valve (3-way) 5
Type 57 / 57L Butterfly Valves 5
Actuator Mounting Dimensions 7
Operation 8
Manual Override Operation 8
Setting Limit Switches 8
Options 8
Single Limit Switch 9
Double Limit Switch 9
Heater and Thermostat 9
RHM 10
Mechanical Brake 10
Feedback Potentiometer 10
Series 92 Options Codes for Serial # Tags 11
Troubleshooting 12
Maintenance 13
ATEX Requirements 13
Spare Parts 14

Series 92 Electric Actuator Introduction

Description

The Series 92 electric actuators feature a reversing,capacitor run motor, with a permanently lubricated gear train, and hardened steel spur gears. These actuators are equipped with integral thermal overload protection (AC models) with automatic reset, independently adjustable limit switches, declutchable manual override, beacon position indication, baked powder epoxy coating with stainless steel trim, ISO bolt circle, and 2 (two) ½" NPT conduit entries.

Units built prior to 8/1/2017 (*x*92W):

Standard models are offered in 120 VAC, feature a UL508 NEMA Type 4X enclosure, and provide up to 2000 in-lbs. of output torque (optional UL1203 enclosure for Hazardous Locations also available).

Various options are available such as operating voltages, additional limit switches, heater and thermostat, feedback potentiometers, etc.
Please see page 8 regarding these options.

Units built post 8/1/2017 (*x*92RHMW):

Standard models are offered in 120 VAC, feature an RHM package, a UL508 NEMA Type 4X enclosure, and provide up to 2000 in-lbs. of output torque (optional UL1203 enclosure for Hazardous Locations also available).
The RHM Package is a combination Heater and Thermostat, and 2-SPDT 8A auxiliary switches that are a dry contact. Please see page ?? for details.

Various options are available such as operating voltages, feedback potentiometers, etc.
Please see page 8 regarding these options.

Electrical Requirement

WARNING: Do not open actuator cover while circuits are energized.

CAUTION: Proper voltage must be supplied to actuator or damage will result.



CAUTION: In pulse power applications, the Series 92RHM will only power the Heater and Thermostat at the end of travel.

CAUTION: If 120vac & 220vac models are PLC driven, output contacts of PLC should be rated at a minimum of 1.5 times required input voltage of actuator

NOTE: To conform to various electrical codes, a **green grounding screw** has been provided (on the baseplate) inside of actuator.

Terminal Strip Wiring: 75° C Copper Supply Wires up to #14 AWG, wired as per the attached diagrams or the wiring diagram affixed inside of actuator cover. Control Wiring shall be insulated with conductors rated 105° C, 300 V minimum. Torque Terminal Strip Wiring to 5 in-lbs.

Model		120 Vac		220 Vac		12 Vdc		24 Vdc		12 Vac		24 Vac		Cycle Time per 90 Degrees (seconds)
	Torque (in/lbs)	Amp Draw	Duty Cycle	Amp Draw	Duty Cycle	Amp Draw	Duty Cycle	Amp Draw	Duty Cycle	Amp Draw	Duty Cycle	Amp Draw	Duty Cycle	
S92	400	0.5	100%	0.4	100%	2.0	75%	4.0	75%	2.0	75%	3.0	75%	15
A92	700	0.8	75%	0.6	75%	2.0	75%	4.0	75%	2.0	75%	3.0	75%	15
B92	1100	0.5	100%	0.4	100%	2.0	75%	4.0	75%	2.0	75%	3.0	75%	32
C92	2000	1.0	50%	0.6	50%	2.0	75%	4.0	75%	2.0	75%	3.0	75%	32

NOTE: Amp rating is considered locked rotor.
Duty cycles are for ambient temperature (73°F)

Installation

Electrical
Reference Drawing #289S92

Models S-92, A92, & B92

1A. To gain access to terminal strip (Part #24) it is necessary to remove manual override knob (Part #18) by loosening slotted setscrew (Part #39). Remove 8 cover screws and lift off cover (torque cover/base screws to 120 in-lbs when finished wiring up unit).

Note: Failure to properly tighten cover/base flange fasteners to 120 in/lbs may compromise the certified safety factors of the actuator.

Model C92

1B. To gain access to terminal strip it is necessary to remove manual override hand wheel (Part #18A) by loosening slotted setscrew (Part #39). Remove cam (Part #51) by loosening 2 set screws (Part #52). Remove 8 cover screws and lift off cover. (torque cover/base screws to 120 in-lbs when finished wiring up unit).

All Models

2. Make electrical connections to terminal strip as shown on wiring schematic located inside the cover (per various electrical codes there is a green screw on the actuator base plate for grounding purposes). Terminals are suitable for up to #14 AWG wire. All units are completely calibrated prior to shipment, and no internal adjustments should be required.

3. For United States units, Install 1/2" NPT conduit fitting(s) to actuator base. For ATEX Certified EU units, Install 1/2" NPT conduit fitting(s), to actuator base.

NOTE: Proper conduit fitting must be used to maintain enclosure rating and not compromise the certified safety factors of the actuator (weatherproof, explosion proof or combination weather proof/explosion proof).

NOTE: We recommend sealing conduit openings on units installed outdoors or exposed to large temperature swings (15ºF or more). We also recommend the Heater and Thermostat option in these applications.

4. Replace actuator cover, and install 8 cap screws supplied and tighten securely to 120 in/lbs. For outdoor or wet locations it is recommended prior to replacing the cover that the top shaft seal be cleaned and coated with silicone grease. Also clean shaft and lightly coat seal area of shaft with silicone grease. Unit is now ready for operation.

Type 21 Ball Valve

Position the valve and the actuator to corresponding positions (either OPEN or CLOSED). The flats on the actuator shaft extension indicate valve position

Type 21 Ball Valves (See Drawing #0107BV sizes ½" – 2")
Install mounting bracket #3 to actuator #2 using bolts #8 and washers #9. Insert coupling #4 on stem of valve #1 and then bolt valve #1 to mounting bracket #3 using bolts #5, nuts #7, and washers #6.

Note: All bolts should be snug and not excessively over tightened.

Type 21 Ball Valves (See Drawing #0113BV sizes 2-1/2" - 4")
Install mounting bracket #3 to actuator #2 using bolts #8 and washers #9. Insert coupling #4 on stem of valve #1 and then bolt valve #1 to mounting bracket #3 using bolts #5, nuts #7, and washers #6.

Note: All bolts should be snug and not excessively over tightened.

Type 23 Ball Valve (3-way)

Position the valve and the actuator to corresponding positions (either OPEN or CLOSED). The flats on the actuator shaft extension indicate valve position

Type 23 Ball Valves (3-way): (See Drawing #0130BV, sizes ½" - 4")
Install mounting bracket #3 to actuator #2 using bolts #8 and washers #9. Insert coupling #4 on stem of valve #1 and then bolt valve #1 to mounting bracket #3 using bolts #5, nuts #7, and washers #6.

Type 57 / 57L Butterfly Valves

CAUTION: If valve is in line, system must be shut down and have no line pressure before removing throttle plate and retaining washer.

Position the valve and the actuator to corresponding positions (either OPEN or CLOSED). The flats on the actuator shaft extension indicate valve position

Butterfly Valves (See Drawing # 0200BF57 sizes 1-1/2" - 6")
No specially machined stem or valve body drilling required. Remove handle (remove handle cap and hex head bolt) to expose throttle plate screws. Remove throttle plate and retaining washer to expose existing bolt pattern.
Mount bracket #3 to actuator #2 with bolts #8 and washers #9 and tighten evenly. Insert coupling #4 into actuator #2.Install valve #1 onto mounting bracket #3 and align stem of valve to engage with coupling. (Line scribed on top of stem indicates disc orientation). Install bolts #5, washers #6 and nuts #7 and tighten evenly. Flats on actuator shaft indicate valve position. (Disc Orientation)

Butterfly Valves (See Drawing #0168BF57 8" size)
No specially machined stem or valve body drilling required. Remove gear operator by removing 4 thru bolts in body of valve to gear operator and lift off. Mount bracket #2 to actuator #10 using bolts #7 and washers #8. Insert actuator shaft adapter #9 into actuator #10. Install valve #1 to mounting bracket #2 and align stem of valve to engage with coupling. (Line scribed on top of stem indicates disc orientation). Install bolts #3, washers #4 & #5 and nuts #6 and tighten evenly. Flats on actuator shaft indicate valve position. (Disc Orientation)



CAUTION: If mounted unit is installed other than straight up, the actuator should be supported independently to prevent side loading and loosening up of fasteners.

Actuator Mounting Dimensions

S92, A92, & B92

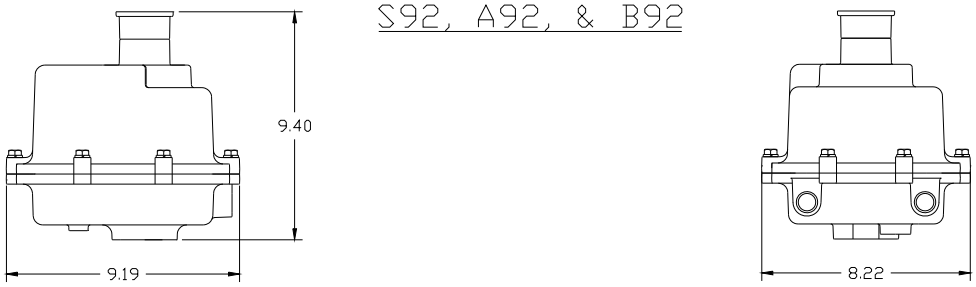

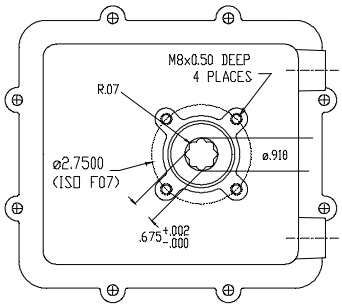

C92

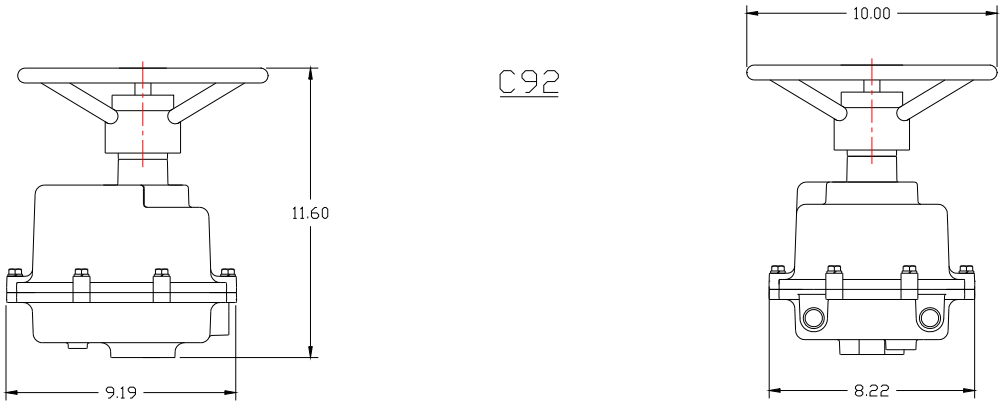

Operation

Manual Override Operation
Reference Drawing #289S92

Models S-92, A92, & B92

Pull up the declutching knob (Part #18) and apply a 5/8" open end wrench to exposed flats and rotate within labeled limits as indicated by arrows.
To re-engage simply rotate actuator shaft in the opposite direction until declutching knob drops back down into position.

Model C92

Push down on hand wheel (Part #18A) and rotate within labeled limits.
To re-engage simply rotate actuator hand wheel until it moves up and re-engages.

CAUTION: The manual override should only be used when there is no power applied to actuator. When power is restored the actuator will automatically resume normal operation.

Setting Limit Switches
Reference Drawing #289S92



Disconnect power!

Open Travel Limit Switch (Top Switch Part #25):
Using declutchable manual override, move the valve into a full open position. Then loosen set screws on top cam (Part #40) and rotate cam (CCW) into limit switch arm until a click is heard, this designates the switch circuit has opened and defines a full open position. Tighten 2 set screws (Part #40) on cam.

Close Travel Limit Switch (Bottom Switch Part #25):
Using declutchable manual override, move the valve to a full closed position, loosen set screws on bottom cam (Part #40) and rotate cam (CW) into limit switch arm until a click is heard, this designates the switch circuit has opened and defines a full closed position. Tighten 2 set screws (Part #40) on cam.

Manually position valve to midstroke. Reapply power to actuator and drive to open or closed position. Actuator motor will run. The shaft will not turn until drive pins (Part #7) reseat in drive gear. This could take up to 32 seconds.

Options

Models S92, A92, B92, C92

Single Limit Switch

This procedure is for units built before 8/1/2017

Reference Drawing Number 0042EL

Install additional limit switch on posts on opposite side of standard limit switches using screws provided.



Wiring for switch is as follows:

Pink = Common to Terminal #6
Purple = NC to Terminal #7
Blue = NO to Terminal #8

Cam must be set so that this switch is tripped just ahead of Closed limit switch.

Double Limit Switch

This procedure is for units built before 8/1/2017

Reference Drawing Number 0042EL

Installation and wiring is the same as for the single limit switch, with the addition of wiring of the second switch as follows:



Brown = Common to Terminal #9
Green = NC to Ternimal #10
Orange = NO to Terminal #11

Cam must be set so that this switch is tripped just ahead of Open limit switch.

Wire tie loose wiring and check operation before installing cover.

Heater and Thermostat

This procedure is for units built before 8/1/2017

Reference Drawing Number 0042EL

Models S92 & A92

Install Heater into threaded hole located between actuator base gasket and motor module.



Wiring is as follows:
Heater lead = Terminal #12
Wire tie loose wiring and check operation before installing cover.

Models B92 & C92

Install Heater into threaded hole located between actuator shaft and motor module.

Wiring is as follows:
Heater lead = Terminal #12
Thermostat lead = Terminal #13
Wire tie loose wiring and check operation before installing cover.

RHM
For units built post 8/1/2017
Reference Appropriate Drawing Number:
M00EL9900 - x92RHM 12vac & 24vac
M00EL9901 - x92RHM 12vdc & 24vdc
M00EL9902 - x92RHM 120vac & 220vac

The RHM is a combination heater and thermostat, and 2-SPDT dry contacts for the open and closed positions.Its best feature is to provide a means of powering the heater and thermostat without the need of additional wiring. When the actuator reaches end of travel, the NO contact on the travel switch is tripped, and provides power for optional light indication. At the same time, the appropriate relay is triggered providing dry contact position indication as well as powering the heater and thermostat. The heater and thermostat are not powered during travel, only at the end of travel. This is a standard feature on Series 92 Automated Valves produced from 7/1/2017. Units provided prior to 7/1/2017 do not have this RHM feature.

Mechanical Brake

Loosen two (2) motor screws diagonally from each other and install bracket with tabs facing upward. Tighten screws

Install hexagonal adapter over armature shaft and tighten set screws.
NOTE: The adapter should be resting on the step of the armature shaft.

Install brake assembly onto hexagonal adapter making sure that the brake assembly is sitting flush on the bracket. Tighten with supplied screws.

Remove motor leads “A” & “B” from capacitor and install “piggy back connectors to capacitor, the re-install motor leads to their original locations.

Connect brake leads to piggy back connectors on capacitor (orientation does not matter)

Wire tie loose wiring and check operation before installing cover.

Feedback Potentiometer

Using 4-40 x 3/8 hardware, install potentiometer and bracket on standoffs by limit switches, with potentiometer gear facing output shaft.

Install drive gear face down over output shaft.

Wiring for potentiometer as follows:
#1 on potentiometer (black) #14 on terminal strip.

#2 on potentiometer (white) #15 on terminal strip.
#3 on potentiometer (red) #16 on terminal strip.

Using multimeter set at 2k ohms, calibrate potentiometer with leads from meter connected to terminals #15 and #16. With actuator in closed position multimeter should read between 95 and 100 ohms.

Rotate actuator 90 degrees (open position).

Connect leads from multimeter to terminal #14 and #15; multimeter should read 95 to 100 ohms.

If necessary adjust open limit switch cam so that multimeter will read 95-100 ohms.

Series 92 Options Codes for Serial # Tags

M1	1 extra limit switch
M2	2 extra limit switches
HT	Heater & thermostat
RHM	RHM Module
P	Feedback potentiometer
C1	4-20 mA Positioner
C3	4-20mA Output Transmitter
BR	Mechanical brake
CO	Center off
CL	Cycle length control
2W	2-wire control
FS	Failsafe Battery Pak

Units built prior to 8/1/2017 utilize M1, M2, and HT
Units built post 8/1/2017 utilize RHM

Example 1: S92**HTP**W

NEMA Type 4X enclosure, heater & thermostat and feedback potentiometer installed (prior to 8/1/2017)..

Example 2: A92**RHMBR**XW

RHM Module, Hazardous Location enclosure, and mechanical brake installed (post 8/1/2017).

Troubleshooting

WARNING: Do not open actuator cover while circuits are energized.

Q: *What if there is no output, but the motor runs?*
A: Manual override possibly engaged.
When the manual override is engaged, the motor will run, but no output will be observed until the manual override re-engages with the output shaft.
A: Valve stem broken. When the valve stem is broken, there will not be a change in fluid movement, making it seem as if the actuator has no output..

Q: *What if valve does not cycle?*
A: No power source to actuator. Check for power.
A: Power source disconnected. Check for broken wire, loose connection or no connection as per appropriate wiring diagram.
A: Low or wrong power source. Check for proper voltage.
A: Mechanical Brake jammed or misaligned. Check alignment of brake assembly.
This could occur during installation when someone would rest their hand on the Mechanical Brake to steady themselves.

Q: *What if there is water and/or moisture inside of the unit?*
A: Conduit fitting installed improperly. Re-install correctly.
A: Cover and/or base seal damaged. Replace damaged seal(s).
A: Base gasket damaged or installed improperly. Check gasket and replace if necessary.
A: Temperature swings of more than 15 degrees F. Install heater and thermostat to eliminate condensation.
When these temperature swings occur, the unit will “sweat” on the inside causing internal corrosion unless the actuator is equipped with a heater and thermostat to keep a constant temperature inside of the housing.
A: Unit has been submerged. Raise unit above liquid level.
An actuator that is to be submerged MUST meet NEMA Type 6 for the proper protection of the actuator and the elimination of a potential hazard. We do not recommend submerging the Series 92 Actuator as the electrical rating does not meet NEMA 6.

Q: *What if unit is oscillating?*
A: Valve torque exceeds output torque of actuator. Check for chemical compatibility of valve, and flange torque.

Q: *What if thermal overload frequently cuts out motor?*
A: Frequency of operation exceeds duty cycle rating. Check cycling period.
A: Unit is oscillating. Refer to above.

Q: *What if motor hums and no output is observed?*
A: Foreign material caught in valve. Remove material and inspect valve for damaged and/or worn parts. Replace parts as necessary.

A: Unit wired incorrectly (simultaneously powering open and closed). Check wiring as per appropriate wiring diagram.
A: Capacitor worn. Replace.

***Q:** What if actuator "over-shoots" limit switches without stopping?*
A: Actuator wired in parallel to each other. Please note that each actuator requires it's own set of switch contacts.

Maintenance

Disconnect power!



WARNING: Do not open actuator cover while circuits are energized.

CAUTION: It is imperative for reducing the chance of electrical shock, and to prevent ignition of hazardous atmospheres that you

Disconnect power

before any maintenance or repairs are performed.

Series 92 actuators are virtually maintenance free. We do however, recommend that periodic checks are made to ensure that all fasteners are tight and properly torqued to extend the life of the actuator and valve.

Series 92 Actuators are manufactured with factory lubricated grease in the gear case and gearbox. In most cases, this lubricant should never have to be replenished, however if deemed necessary, we recommend using Aeroshell Grease #33 MS, mfg. by Shell Oil Co.
Consult our technical department before replenishing lubricant.

For outdoor or wet locations keep top and bottom seals coated with a silicone based grease.

ATEX Requirements

Ⓔx II 2 G
Ex d IIB T4

Service/Maintenance/Inspection Requirements
Translation Requirements

Above directive for hazardous location service electric actuators, for use throughout the European Union.
All electric actuators are to be used for remote operation of a valve to open or closed positions. Any other uses are not approved by Asahi/America, Inc.

Every 250,000 cycles or 10 years whichever comes first, the actuator must be removed from service and sent back to Asahi/America, Inc. for inspection of wear of bearings as they relate to joints and gaps in accordance with above directive. Any units not within normal tolerances, will need to be re-built or replaced at the users expense.

Translations are in effect for the Atex product. It the ATEX actuator is to be used in any 1 of the 26 EU countries where English is not the primary language, it is the responsibility of the furnishing distributor to provide translated copies of this O & M manual.

Spare Parts
Reference Drawing #289S92

We recommend that the following be kept on hand as spare parts.

1 --- Limit Switch (Part #25)
1 --- Capacitor (Part #27 or #28)

NOTE: When ordering replacement motor parts and/or options specify model #, Serial #, and voltage.

Attachments:

13 drawings: 0043EL, 0044EL, 0042EL, M00EL9900, M00EL9901, M00EL9902, 0107BV, 0113BV, 0130BV, 0168BF57, 0200BF57, 289S92, M00EL610

WIRING DIAGRAM FOR 115 VAC AND 220 VAC ONLY
ACTUATOR SHOWN IN COUNTER-CLOCKWISE EXTREME OF TRAVEL, OR "OPEN" POSITION

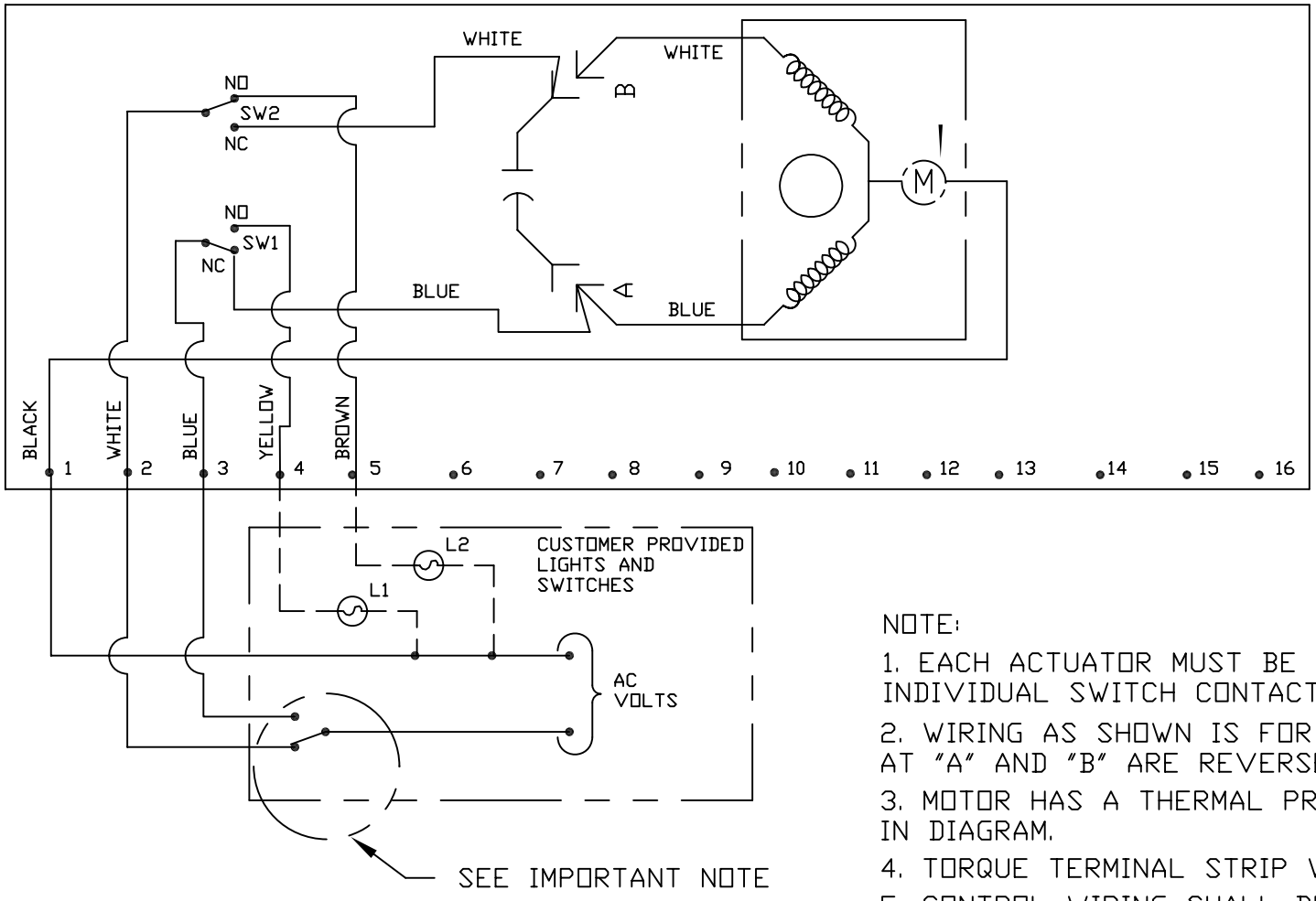

NOTE:

1. EACH ACTUATOR MUST BE POWERED THRU ITS OWN INDIVIDUAL SWITCH CONTACTS TO AVOID CROSS FEED.
2. WIRING AS SHOWN IS FOR S92 & A92 MOTOR LEADS AT "A" AND "B" ARE REVERSED FOR B92 AND C92.
3. MOTOR HAS A THERMAL PROTECTOR AS SHOWN BY (M) IN DIAGRAM.
4. TORQUE TERMINAL STRIP WIRING TO 5 IN-LBS.
5. CONTROL WIRING SHALL BE INSULATED WITH CONDUCTORS RATED 105°C, 300V MINIMUM.
6. 75°C COPPER SUPPLY WIRES ONLY.

THIS DRAWING AND ALL INFORMATION HEREON IS THE PROPERTY OF ASAHI/AMERICA. ANY COPYING, REPRODUCTION OR UNAUTHORIZED USE IS FORBIDDEN WITHOUT WRITTEN CONSENT.

	NAME	DATE
DR	JOHN GLASSFORD	6/18/07
APPD	DAVE HURLEY	6/18/07
PROD	LEO LESTER	6/18/07
WO#/CO#		
FILE		

ASAHI/AMERICA
ISO 9001 CERTIFIED
35 GREEN STREET, P.O. BOX 653, MALDEN, MA.

SERIES 92 WIRING DIAGRAM 120/220 VAC

SIZE	DWG. NO.	REV
A	0043EL	B

SCALE NTS

SHEET 1 OF 1

DC WIRING DIAGRAM

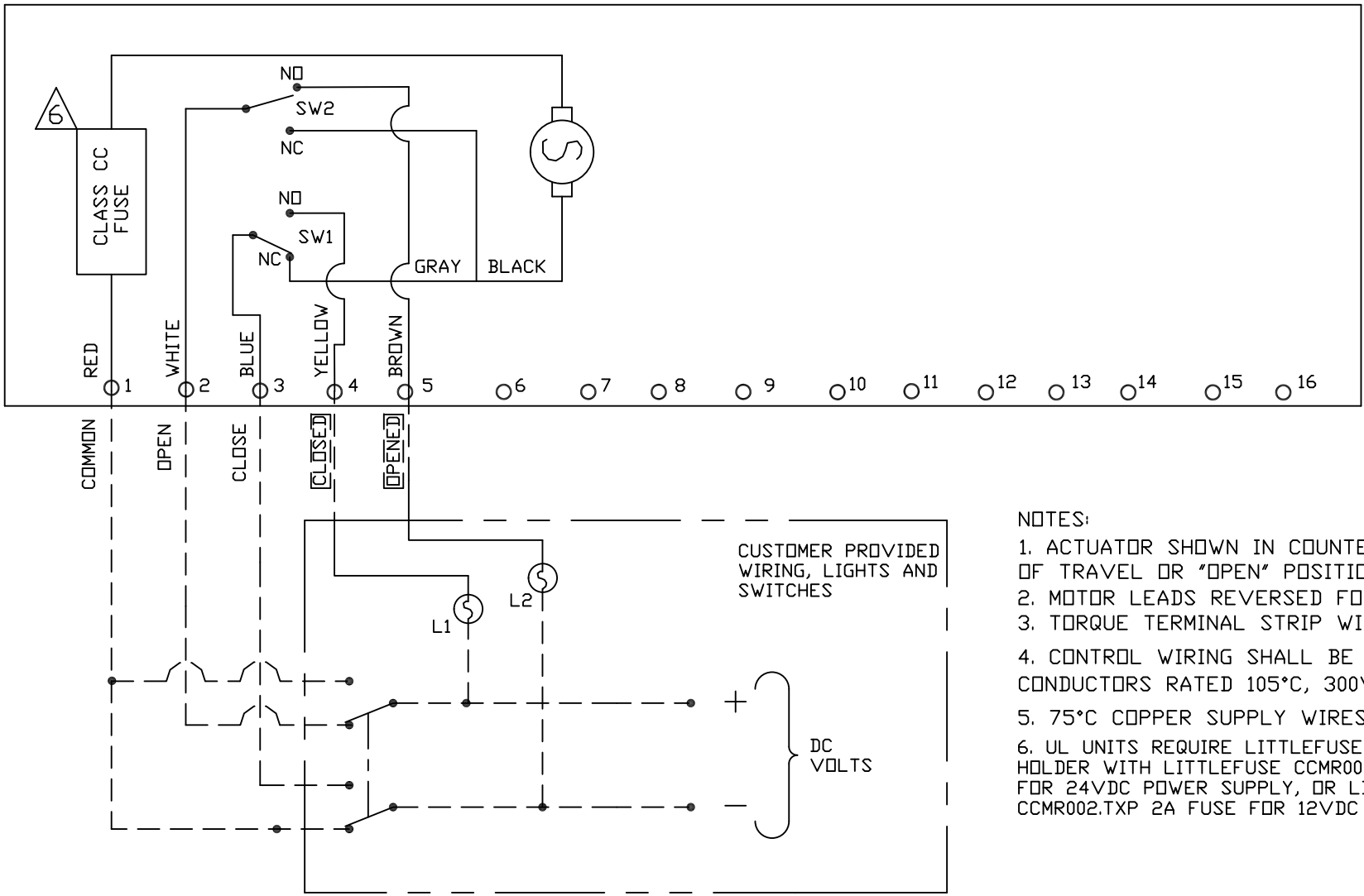

NOTES:

1. ACTUATOR SHOWN IN COUNTER CLOCKWISE EXTREME OF TRAVEL OR "OPEN" POSITION.
2. MOTOR LEADS REVERSED FOR 1100 & 2200 IN*LBS
3. TORQUE TERMINAL STRIP WIRING TO 5 IN-LBS.
4. CONTROL WIRING SHALL BE INSULATED WITH CONDUCTORS RATED 105°C, 300V MINIMUM.
5. 75°C COPPER SUPPLY WIRES ONLY.
6. UL UNITS REQUIRE LITTLEFUSE L60030C1C FUSE HOLDER WITH LITTLEFUSE CCMR004.TXP 4A FUSE FOR 24VDC POWER SUPPLY, OR LITTLEFUSE CCMR002.TXP 2A FUSE FOR 12VDC POWER SUPPLY

THIS DRAWING AND ALL INFORMATION HEREON IS THE PROPERTY OF ASAHI/AMERICA. ANY COPYING, REPRODUCTION OR UNAUTHORIZED USE IS FORBIDDEN WITHOUT WRITTEN CONSENT.

	NAME	DATE
DR	JOHN GLASSFORD	1/8/08
APPD	KEN BLYSTONE	1/8/08
PROD		
WO#/CO#		
FILE		

ASAHI/AMERICA
ISO 9001 CERTIFIED
35 GREEN STREET, P.O. BOX 653, MALDEN, MA.

SERIES 92 WIRING DIAGRAM 12/24 VDC

SIZE	DWG. NO.	REV
A	0044EL	E
SCALE NTS		SHEET 1 OF 1

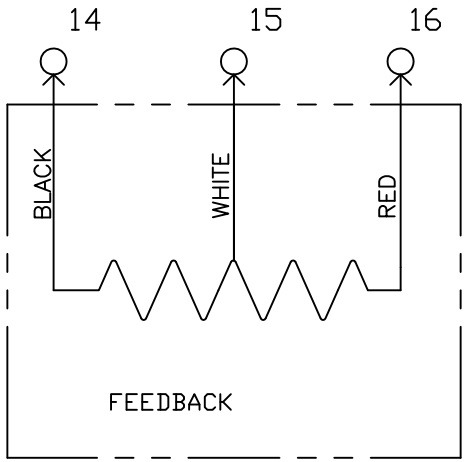

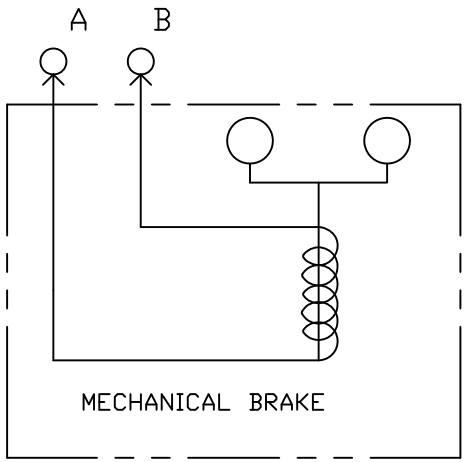

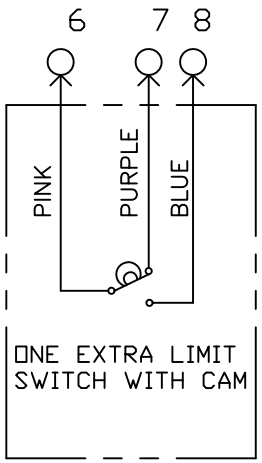

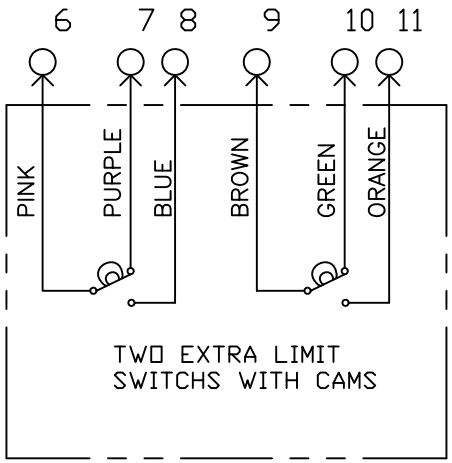

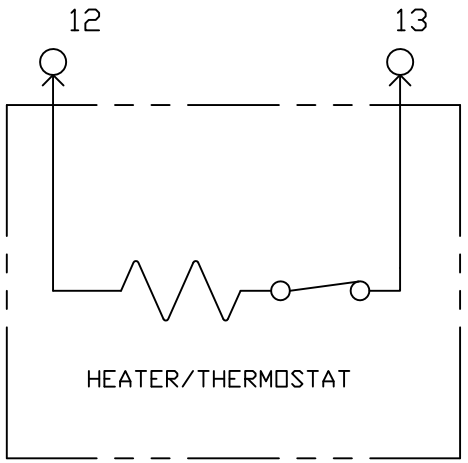

NOTES:

1. TORQUE TERMINAL STRIP WIRING TO 5 IN-LBS.
2. CONTROL WIRING SHALL BE INSULATED WITH CONDUCTORS RATED 105°C, 300V MINIMUM.
3. 75°C COPPER SUPPLY WIRES ONLY.

THIS DRAWING AND ALL INFORMATION HEREON IS THE PROPERTY OF ASAHI/AMERICA. ANY COPYING, REPRODUCTION OR UNAUTHORIZED USE IS FORBIDDEN WITHOUT WRITTEN CONSENT.

	NAME	DATE
DR	JOHN GLASSFORD	6/18/07
APPD	DAVE HURLEY	6/18/07
PROD	LEO LESTER	6/18/07
WO#/CO#		
FILE		

ASAHI/AMERICA
ISO 9001 CERTIFIED
35 GREEN STREET, P.O. BOX 653, MALDEN, MA.

SERIES 92 WIRING DIAGRAM OPTIONS

SIZE	DWG. NO.	REV
A	0042EL	C

SCALE NTS

SHEET 1 OF 1

REV	DATE	DESCRIPTION	BY	FROM
A	6/22/17	FIRST ISSUE	JH	KB

AC WIRING DIAGRAM

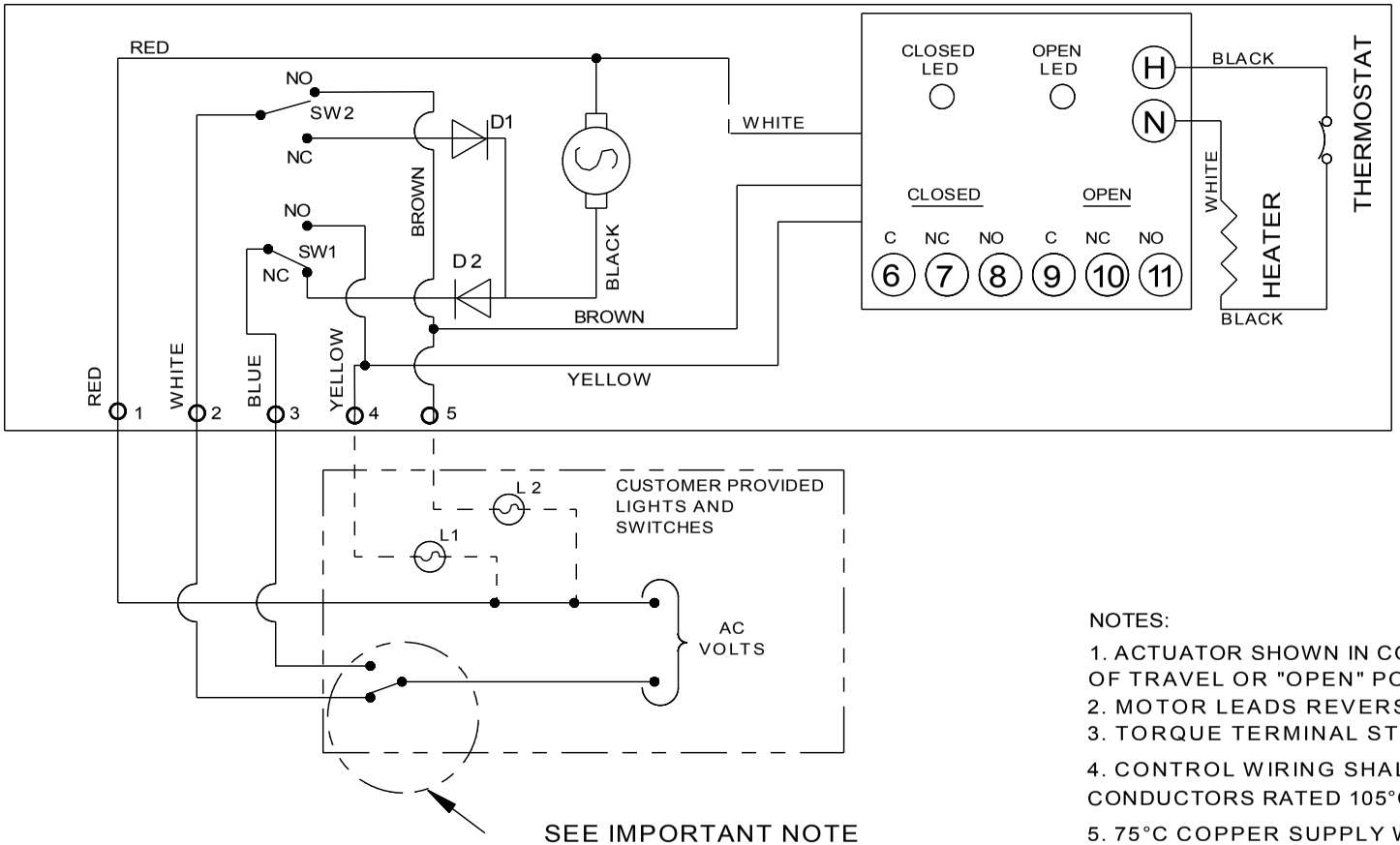

NOTES:

1. ACTUATOR SHOWN IN COUNTER CLOCKWISE EXTREME OF TRAVEL OR "OPEN" POSITION.
2. MOTOR LEADS REVERSED FOR 1100 & 2200 IN*LBS
3. TORQUE TERMINAL STRIP WIRING TO 5 IN-LBS.
4. CONTROL WIRING SHALL BE INSULATED WITH CONDUCTORS RATED 105°C, 300V MINIMUM.
5. 75°C COPPER SUPPLY WIRES ONLY.

UNLESS OTHERWISE SPECIFIED		
DIMENSIONS ARE IN INCHES		
MACHINING TOLERANCES:	2 PL DECIMALS	± .01
	3 PL DECIMALS	± .005
	ANGULAR	± 1/2°
	FRACTIONAL	± 1/64
FABRICATION TOLERANCES:	1/2" - 8"	± 1/4
	10" AND UP	± 1/2
	ANGULAR	± 1.0°
WELD TYPE:	N/A	
MATERIAL:	AS NOTED	
FINISH:	125µ"	

THIS DRAWING AND ALL INFORMATION HEREIN IS THE PROPERTY OF ASAHI/AMERICA. ANY COPYING, REPRODUCTION OR UNAUTHORIZED USE IS FORBIDDEN WITHOUT WRITTEN CONSENT.

	NAME	DATE
DR	J. Hughes	06/22/17
REV		
APPR	K. Blystone	06/22/17
PRODUCT:	VALVE & ACT	
WO#/SO#		

ASAHI/AMERICA
ISO 9001 CERTIFIED
655 ANDOVER STREET, LAWRENCE, MA

SERIES 92 WITH RHM WIRING DIAGRAM 12/24 VAC

JDE PART # M00EL9900

SIZE A | DWG # **M00EL9900** | REVISION A

SCALE N/A | SHEET 1 OF 1

REV	DATE	DESCRIPTION	BY	FROM
A	6/22/17	FIRST ISSUE	JH	KB

DC WIRING DIAGRAM

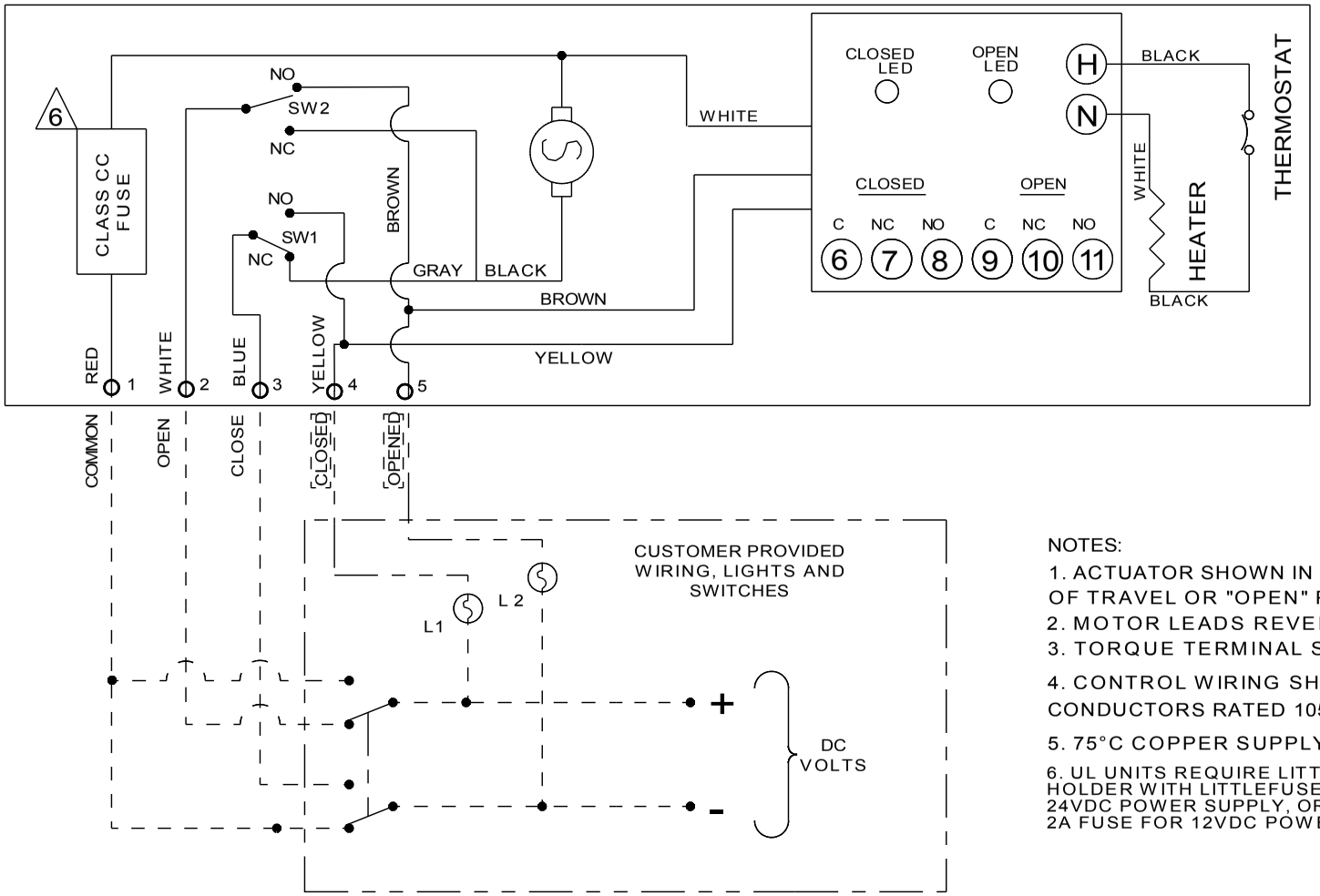

NOTES:

1. ACTUATOR SHOWN IN COUNTER CLOCKWISE EXTREME OF TRAVEL OR "OPEN" POSITION.
2. MOTOR LEADS REVERSED FOR 1100 & 2200 IN*LBS
3. TORQUE TERMINAL STRIP WIRING TO 5 IN-LBS.
4. CONTROL WIRING SHALL BE INSULATED WITH CONDUCTORS RATED 105°C, 300V MINIMUM.
5. 75°C COPPER SUPPLY WIRES ONLY.
6. UL UNITS REQUIRE LITTLEFUSE L60030C1C FUSE HOLDER WITH LITTLEFUSE CCMR004.TXP 4A FUSE FOR 24VDC POWER SUPPLY, OR LITTLEFUSE CCMR002.TXP 2A FUSE FOR 12VDC POWER SUPPLY

UNLESS OTHERWISE SPECIFIED		
DIMENSIONS ARE IN INCHES		
MACHINING TOLERANCES:	2 PL DECIMALS	± .01
	3 PL DECIMALS	± .005
	ANGULAR	± 1/2°
	FRACTIONAL	± 1/64
FABRICATION TOLERANCES:	1/2" - 8"	± 1/4
	10" AND UP	± 1/2
	ANGULAR	± 1.0°
WELD TYPE:	N/A	
MATERIAL:	AS NOTED	
FINISH:	125µ"	

THIS DRAWING AND ALL INFORMATION HEREIN IS THE PROPERTY OF ASAHI/AMERICA. ANY COPYING, REPRODUCTION OR UNAUTHORIZED USE IS FORBIDDEN WITHOUT WRITTEN CONSENT.

	NAME	DATE
DR	J. Hughes	06/22/17
REV		
APPR	K. Blystone	06/22/17

PRODUCT: VALVE & ACT

WO#/SO#

ASAHI/AMERICA
ISO 9001 CERTIFIED
655 ANDOVER STREET, LAWRENCE, MA

SERIES 92 WITH RHM WIRING DIAGRAM 12/24 VDC

JDE PART # M00EL9901

SIZE A | DWG # **M00EL9901** | REVISION A

SCALE N/A | SHEET 1 OF 1

REV	DATE	DESCRIPTION	BY	FROM
A	6/22/17	FIRST ISSUE	JH	KB

WIRING DIAGRAM FOR 120 VAC AND 220 VAC ONLY

ACTUATOR SHOWN IN COUNTER-CLOCKWISE EXTREME OF TRAVEL, OR "OPEN" POSITION

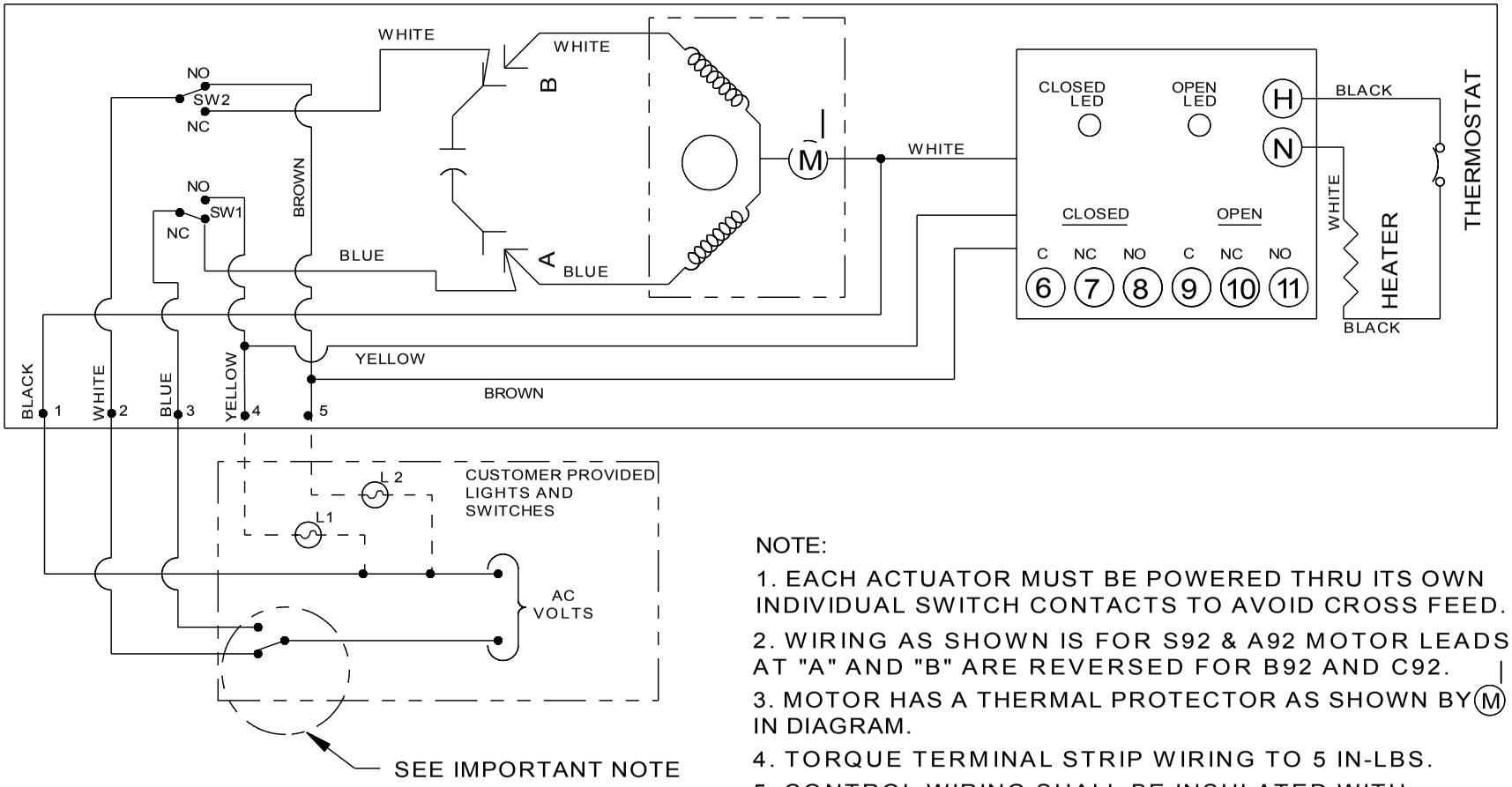

NOTE:

1. EACH ACTUATOR MUST BE POWERED THRU ITS OWN INDIVIDUAL SWITCH CONTACTS TO AVOID CROSS FEED.
2. WIRING AS SHOWN IS FOR S92 & A92 MOTOR LEADS AT "A" AND "B" ARE REVERSED FOR B92 AND C92.
3. MOTOR HAS A THERMAL PROTECTOR AS SHOWN BY (M) IN DIAGRAM.
4. TORQUE TERMINAL STRIP WIRING TO 5 IN-LBS.
5. CONTROL WIRING SHALL BE INSULATED WITH CONDUCTORS RATED 105°C, 300V MINIMUM.
6. 75°C COPPER SUPPLY WIRES ONLY.

UNLESS OTHERWISE SPECIFIED		
DIMENSIONS ARE IN INCHES		
MACHINING TOLERANCES:	2 PL DECIMALS	± .01
	3 PL DECIMALS	± .005
	ANGULAR	± 1/2°
	FRACTIONAL	± 1/64
FABRICATION TOLERANCES:	1/2" - 8"	± 1/4
	10" AND UP	± 1/2
	ANGULAR	± 1.0°
WELD TYPE:	N/A	
MATERIAL:	AS NOTED	
FINISH:	125µ"	

THIS DRAWING AND ALL INFORMATION HEREIN IS THE PROPERTY OF ASAHI/AMERICA. ANY COPYING, REPRODUCTION OR UNAUTHORIZED USE IS FORBIDDEN WITHOUT WRITTEN CONSENT.

	NAME	DATE
DR	J. Hughes	06/22/17
REV		
APPR	K. Blystone	06/22/17

PRODUCT: VALVE & ACT

WO#/SO#

ASAHI/AMERICA
ISO 9001 CERTIFIED
655 ANDOVER STREET, LAWRENCE, MA

SERIES 92 WITH RHM WIRING DIAGRAM 120/220 VAC

JDE PART # M00EL9902

SIZE A | DWG # **M00EL9902** | REVISION A

SCALE N/A | SHEET 1 OF 1

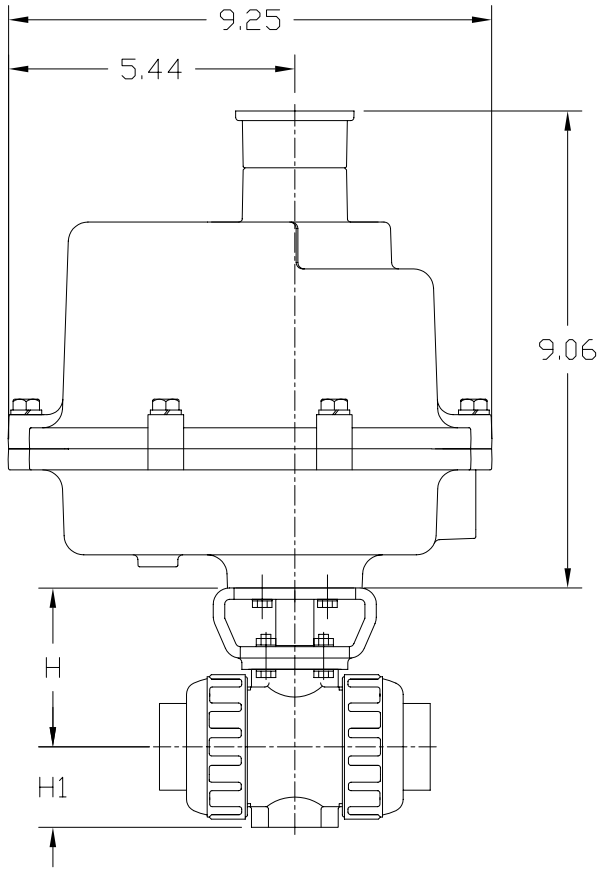

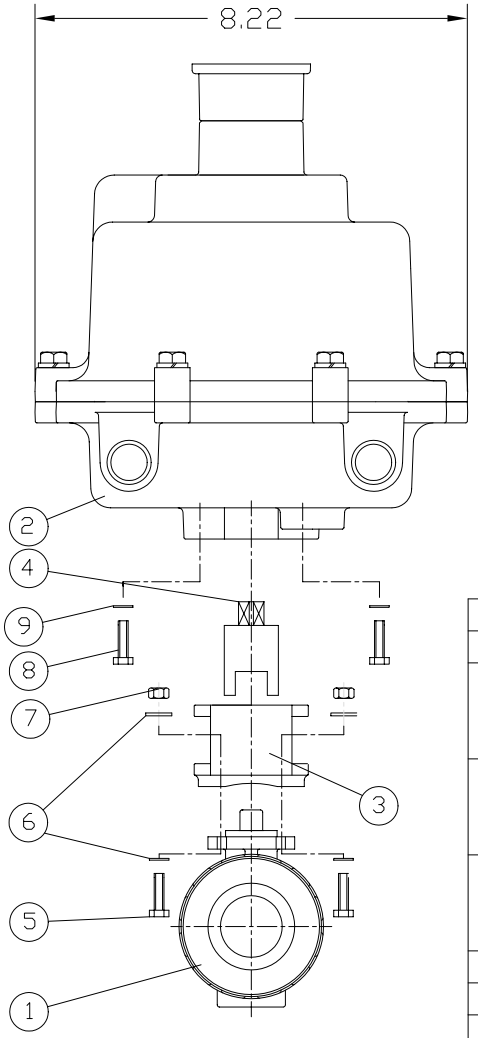

UNIT: INCH

VALVE SIZE	1/2″	3/4″	1″	1-1/4″	1-1/2″	2″
H	2.76	3.01	3.29	3.64	3.98	4.43
H1	1.14	1.38	1.54	1.85	2.17	2.60

NOTE. The shape and appearance of assembly differ a little with nominal size compared to this drawing.

ITEM	DESCRIPTION	MATERIAL	QTY
9	FLAT WASHER (M8.0)	STAINLESS STEEL	4
8	BOLT (M8.0x1.25-16LG)	STAINLESS STEEL	4
7	NUT (FOR 1/2″ THRU 1-1/4″ : M5.0x.8) (FOR 1-1/2″ THRU 2″ : M6.0x1)	STAINLESS STEEL	4
6	FLAT WASHER (FOR 1/2″ THRU 1-1/4″ : M5.0) (FOR 1-1/2″ THRU 2″ : M6.0)	STAINLESS STEEL	8
5	BOLT (FOR 1/2″ THRU 1-1/4″ : M5.0x.8-16LG) (FOR 1-1/2″ THRU 2″ : M6.0x1-20LG)	STAINLESS STEEL	4
4	COUPLING	STAINLESS STEEL 303	1
3	MOUNTING BRACKET	PPG	1
2	ACTUATOR SERIES 92	EPOXY COATED ALUMINUM	1
1	BALL VALVE TYPE 21	PVC,CPVC,PP,PVDF	1

THIS DRAWING AND ALL INFORMATION HEREON IS THE PROPERTY OF ASAHI/AMERICA. ANY COPYING, REPRODUCTION OR UNAUTHORIZED USE IS FORBIDDEN WITHOUT WRITTEN CONSENT.

	NAME	DATE
DR	DAN CAMERON	8/02/01
APPD	DAVE HURLEY	8/2/01
PROD	LEO LESTER	8/2/01
WO#/CO#		
FILE		

FOR REFERENCE ONLY
ASAHI/AMERICA

ASAHI/AMERICA
ISO 9001 CERTIFIED
35 GREEN STREET, P.O. BOX 653, MALDEN, MA.

BALL VALVE TYPE21 SERIES92 ELECTRIC ACTUATOR 1/2″ THRU 2″

SIZE	DWG. NO.	REV
A	0107BV	A

SCALE NTS

SHEET 1 OF 1

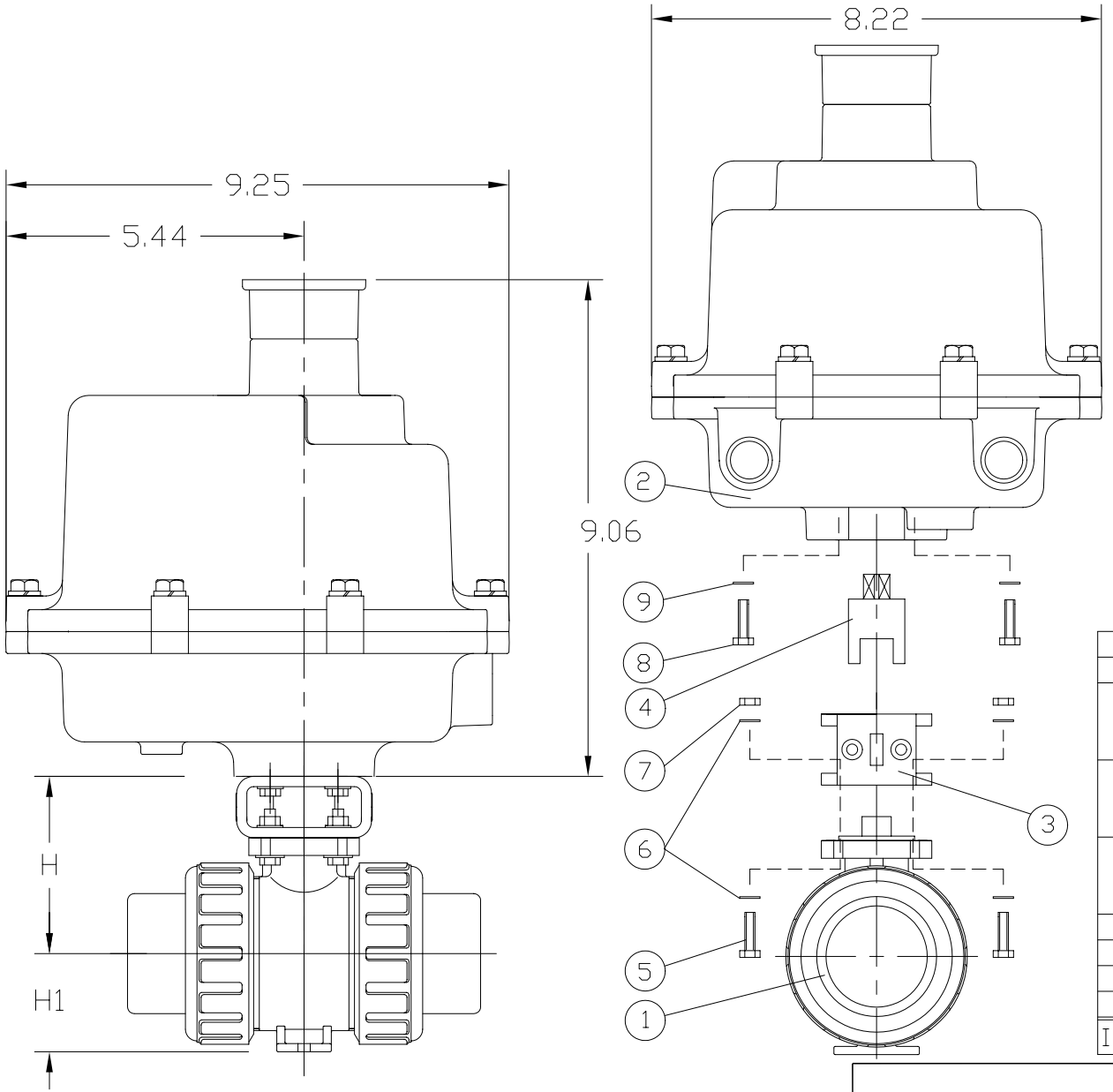

UNIT: INCH

VALVE SIZE	2-1/2″	3″	4″
H	5.12	5.47	6.97
H1	2.83	3.35	4.33

NOTE. The shape and appearance of assembly differ a little with nominal size compared to this drawing.

ITEM	DESCRIPTION	MATERIAL	QTY
9	FLAT WASHER (M8.0)	STAINLESS STEEL	4
8	BOLT (M8.0×1.25-16LG)	STAINLESS STEEL	4
7	NUT (FOR 2-1/2″ AND 3″ : M8.0×1.25) (FOR 4″ : M10.0×1.50)	STAINLESS STEEL	4
6	FLAT WASHER (FOR 2-1/2″ AND 3″ : M8.0) (FOR 4″ : M10.0)	STAINLESS STEEL	8
5	BOLT (FOR 2-1/2″ AND 3″ : M8.0×1.25-35LG) (FOR 4″ : M10.0×1.50-40LG)	STAINLESS STEEL	4
4	COUPLING	STAINLESS STEEL 303	1
3	MOUNTING BRACKET	PPG	1
2	ACTUATOR SERIES 92	EPOXY COATED ALUMINUM	1
1	BALL VALVE TYPE 21	PVC,CPVC,PP,PVDF	1

THIS DRAWING AND ALL INFORMATION HEREON IS THE PROPERTY OF ASAHI/AMERICA. ANY COPYING, REPRODUCTION OR UNAUTHORIZED USE IS FORBIDDEN WITHOUT WRITTEN CONSENT.

	NAME	DATE
DR	KENICHI MIYAZAKI	8/14/01
APPD	DAVE HURLEY	8/14/01
PROD	LEO LESTER	8/14/01
WO#/CO#		
FILE		

FOR REFERENCE ONLY
ASAHI/AMERICA

ASAHI/AMERICA
ISO 9001 CERTIFIED
35 GREEN STREET, P.O. BOX 653, MALDEN, MA.

BALL VALVE TYPE21
SERIES92 ELECTRIC ACTUATOR
2-1/2″ THRU 4″

SIZE	DWG. NO.	REV
A	0113BV	A

SCALE NTS

SHEET 1 OF 1

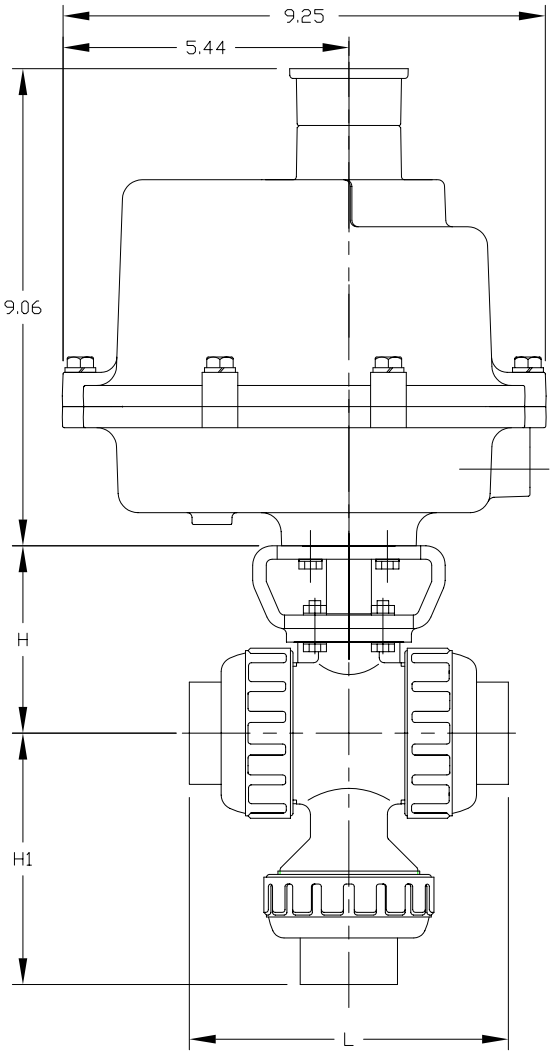

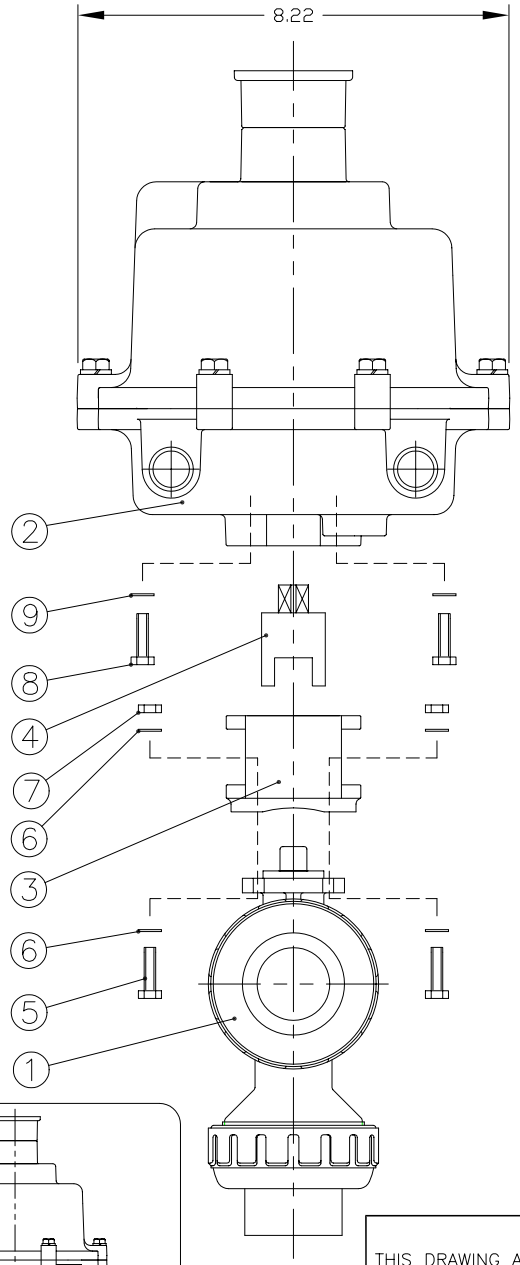

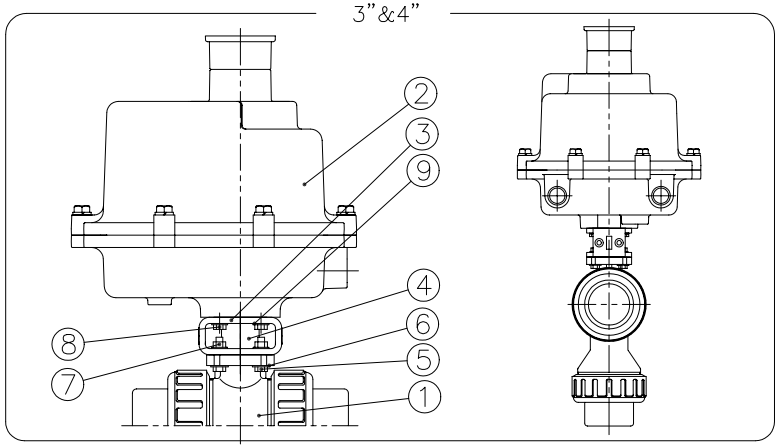

DIMENSIONS TABLE — UNIT: inch

NOMINAL SIZE		H	FLANGED H1	FLANGED L	THREADED H1	THREADED L	SOCKET PVC,CPVC H1	SOCKET PVC,CPVC L	SOCKET PP,PVDF (DIN) H1	SOCKET PP,PVDF (DIN) L	SOCKET PP,PVDF (IPS) H1	SOCKET PP,PVDF (IPS) L	SPIGOT (BUTT END) H1	SPIGOT (BUTT END) L
½"	15mm	2.76	3.70	5.63	2.89	4.02	3.08	4.45	2.80	3.90	3.09	4.45	3.27	4.88
¾	20	3.01	4.50	6.77	3.48	4.72	3.56	5.08	3.27	4.49	3.61	5.08	3.90	5.67
1	25	3.29	5.24	7.36	4.13	5.16	4.32	5.75	3.94	4.84	4.37	5.75	4.53	6.06
1½	40	3.98	6.50	8.35	5.53	6.42	5.71	7.24	5.16	5.83	5.85	7.24	6.02	6.85
2	50	4.43	7.34	9.21	6.61	7.76	6.66	8.23	6.06	6.93	6.76	8.23	7.01	8.82
3	80	5.47	10.06	11.97	9.25	10.39	9.59	11.10	8.82	9.88	11.10	11.10	9.69	11.61
4	100	6.97	12.01	14.65	11.77	14.17	11.58	13.90	10.98	12.20	14.37	14.37	11.85	12.72

NOTE; 1) THE SHAPE AND APPEARANCE OF ASSEMBLY DIFFER A LITTLE WITH NOMINAL SIZE COMPARED TO THIS DRAWING.

2) FOR DETAILED VALVE DIMENSIONS, REFER TO DWG. NO. 0126BV, 0127BV, 0128BV.
L-PORT : DWG. NO. 0126BV
DOUBLE L-PORT : DWG. NO. 0127BV
CROSS PORT : DWG. NO. 0128BV

FOR REFERENCE ONLY
ASAHI/AMERICA

ITEM	DESCRIPTION	MATERIAL	QTY
9	FLAT WASHER (M6.0)	STAINLESS STEEL	4
8	BOLT (M6.0x1-16LG)	STAINLESS STEEL	4
7	NUT (FOR 1/2" THRU 1-1/4" : M5.0x.8) (FOR 1-1/2" THRU 2" : M6.0x1) (FOR 3" : M8.0x1.25) (FOR 4" : M10.0x1.50)	STAINLESS STEEL	4
6	FLAT WASHER (FOR 1/2" THRU 1-1/4" : M5.0) (FOR 1-1/2" THRU 2" : M6.0) (FOR 3" : M8.0) (FOR 4" : M10.0)	STAINLESS STEEL	8
5	BOLT (FOR 1/2" THRU 1" : M5.0x.8-16LG) (FOR 1-1/2" THRU 2" : M6.0x1-20LG) (FOR 3" : M8.0x1.25-35LG) (FOR 4" : M10.0x1.50-40LG)	STAINLESS STEEL	4
4	COUPLING	STAINLESS STEEL 303	1
3	MOUNTING BRACKET	PPG	1
2	ACTUATOR SERIES 92	ZYTEL	1
1	MULTIPORT BALL VALVE TYPE23	PVC,CPVC,PP,PVDF	1

THIS DRAWING AND ALL INFORMATION HEREON IS THE PROPERTY OF ASAHI/AMERICA. ANY COPYING, REPRODUCTION OR UNAUTHORIZED USE IS FORBIDDEN WITHOUT WRITTEN CONSENT.

	NAME	DATE
DR	KENICHI MIYAZAKI	1/28/03
APPD	DAVE HURLEY	1/28/03
PROD	LEO LESTER	1/28/03
WO#/CO#		
FILE		

ASAHI/AMERICA
ISO 9001 CERTIFIED
35 GREEN STREET, P.O. BOX 653, MALDEN, MA.

MULTI PORT BALL VALVE TYPE23 WITH SERIES92 ACT. 1/2" THRU 4"

SIZE	DWG. NO.	REV
A	0130BV	A

SCALE NTS

SHEET 1 OF 1

VALVE SIZE	H1	C
1 1/2"	3.74	5.00
2"	3.86	5.00
2 1/2"	3.66	5.58
3"	3.94	5.78
4"	4.53	6.56
5"	5.00	8.05
6"	5.63	8.76
8"	6.70	11.25

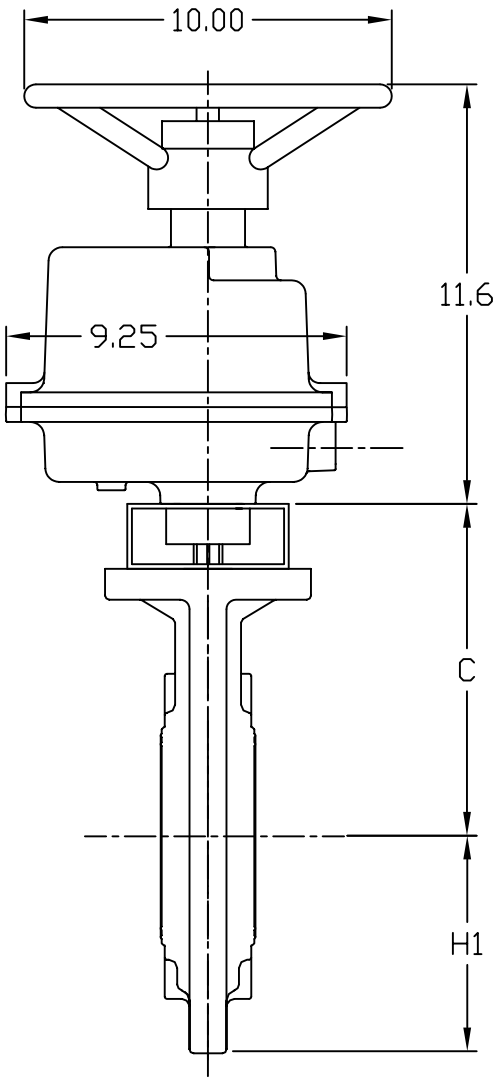

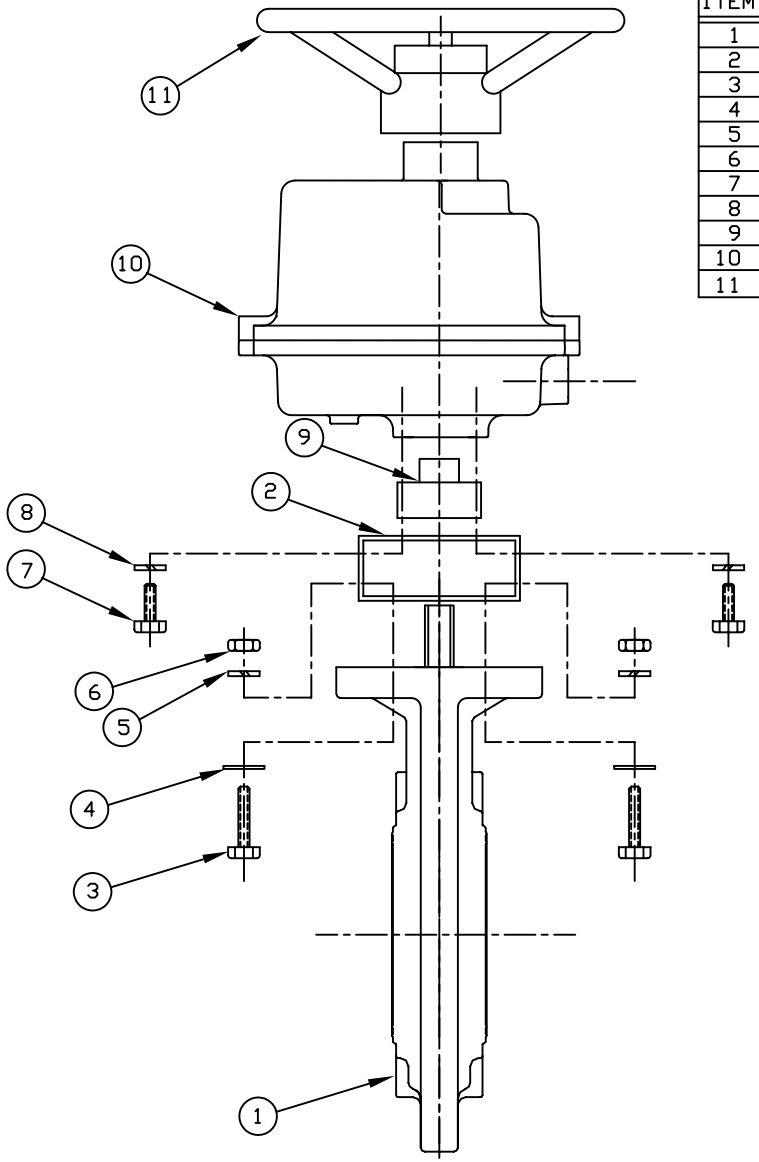

ITEM	DESCRIPTION	MATERIAL	QTY
1	BUTTERFLY VALVE		1
2	BRACKET MOUNTING	300 SS	1
3	SCREW	300 SS	4
4	WASHER FLAT	300 SS	4
5	WASHER LOCK	300 SS	4
6	NUT HEX	300 SS	4
7	SCREW	300 SS	4
8	WASHER LOCK	300 SS	4
9	SHAFT ADAPTER	300 SS	1
10	ACTUATOR	ALUM. EPOXY COATED	1
11	HANDWHEEL	ALUM. EPOXY COATED	1

FOR REFERENCE ONLY
ASAHI/AMERICA

THIS DRAWING AND ALL INFORMATION HEREON IS THE PROPERTY OF ASAHI/AMERICA. ANY COPYING, REPRODUCTION OR UNAUTHORIZED USE IS FORBIDDEN WITHOUT WRITTEN CONSENT.

	NAME	DATE
DR	JOHN GLASSFORD	6/10/05
APPD	DAVE HURLEY	6/10/05
PROD	LEO LESTER	6/10/05
PATH		
WO#/CO#		

ASAHI/AMERICA
ISO 9001 CERTIFIED
35 GREEN STREET, P.O. BOX 653, MALDEN, MA.

TYPE57 BF VALVE SERIES
92 2000 IN/LB ELECTRIC ACT

SIZE	DWG. NO.	REV
A	0168BF57	A

SCALE NONE SHEET 1 OF 1

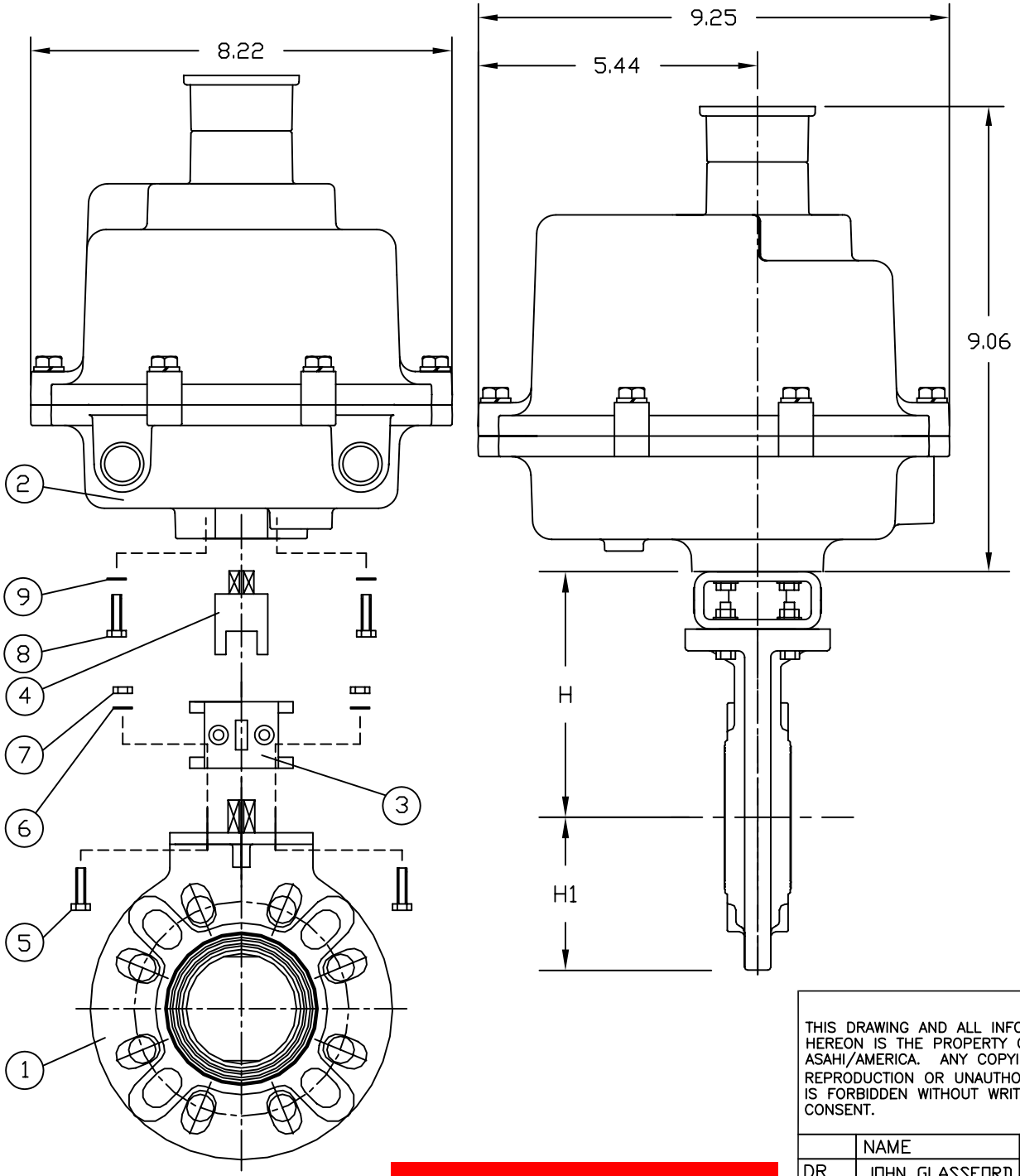

UNIT: INCH

VALVE SIZE	1-1/2″	2″	2-1/2″	3″	4″	5″	6″
H	5.51	5.75	6.18	6.46	7.16	8.46	8.97
H1	2.95	3.27	3.66	3.94	4.53	5.00	5.63

NOTE: 1. The shape and appearance of assembly differ a little with nominal size compared to this drawing.

2. For 1–1/2" thru. 4" Mounting Bracket : F7 x F05,F07

For 5" and 6" Mounting Bracket : F10 x F07,F10

ITEM	DESCRIPTION	MATERIAL	QTY
9	FLAT WASHER (M8.0)	STAINLESS STEEL	4
8	BOLT (M8.0x1.25-16LG)	STAINLESS STEEL	4
7	NUT (FOR 1-1/2″ THRU. 4″ : M8.0x1.25) (FOR 5″ AND 6″ : M10.0x1.50)	STAINLESS STEEL	4
6	FLAT WASHER (FOR 1-1/2″ THRU. 4″ : M8.0) (FOR 5″ AND 6″ : M10.0)	STAINLESS STEEL	8
5	BOLT (FOR 1-1/2″ THRU. 4″ : M8.0x1.25-35LG) (FOR 5″ AND 6″ : M10.0x1.50-40LG)	STAINLESS STEEL	4
4	COUPLING	STAINLESS STEEL 303	1
3	MOUNTING BRACKET	PPG	1
2	ACTUATOR SERIES 92	EPOXY COATED ALUMINUM	1
1	BUTTERFLY VALVE TYPE 57	U-PVC,PP,PVDF	1

THIS DRAWING AND ALL INFORMATION HEREON IS THE PROPERTY OF ASAHI/AMERICA. ANY COPYING, REPRODUCTION OR UNAUTHORIZED USE IS FORBIDDEN WITHOUT WRITTEN CONSENT.

	NAME	DATE
DR	JOHN GLASSFORD	6/13/05
APPD	DAVE HURLEY	6/13/05
PROD	LEO LESTER	6/13/05
WO#/CO#		
FILE		

FOR REFERENCE ONLY
ASAHI/AMERICA

ASAHI/AMERICA
ISO 9001 CERTIFIED
35 GREEN STREET, P.O. BOX 653, MALDEN, MA.

BUTTERFLY VALVE TYPE57 SERIES92 ELECTRIC ACTUATOR 1-1/2″ THRU 6″

SIZE	DWG. NO.	REV
A	0200BF57	A

SCALE NTS

SHEET 1 OF 1

SERIES 92

PARTS LIST & MATERIALS OF CONSTRUCTION

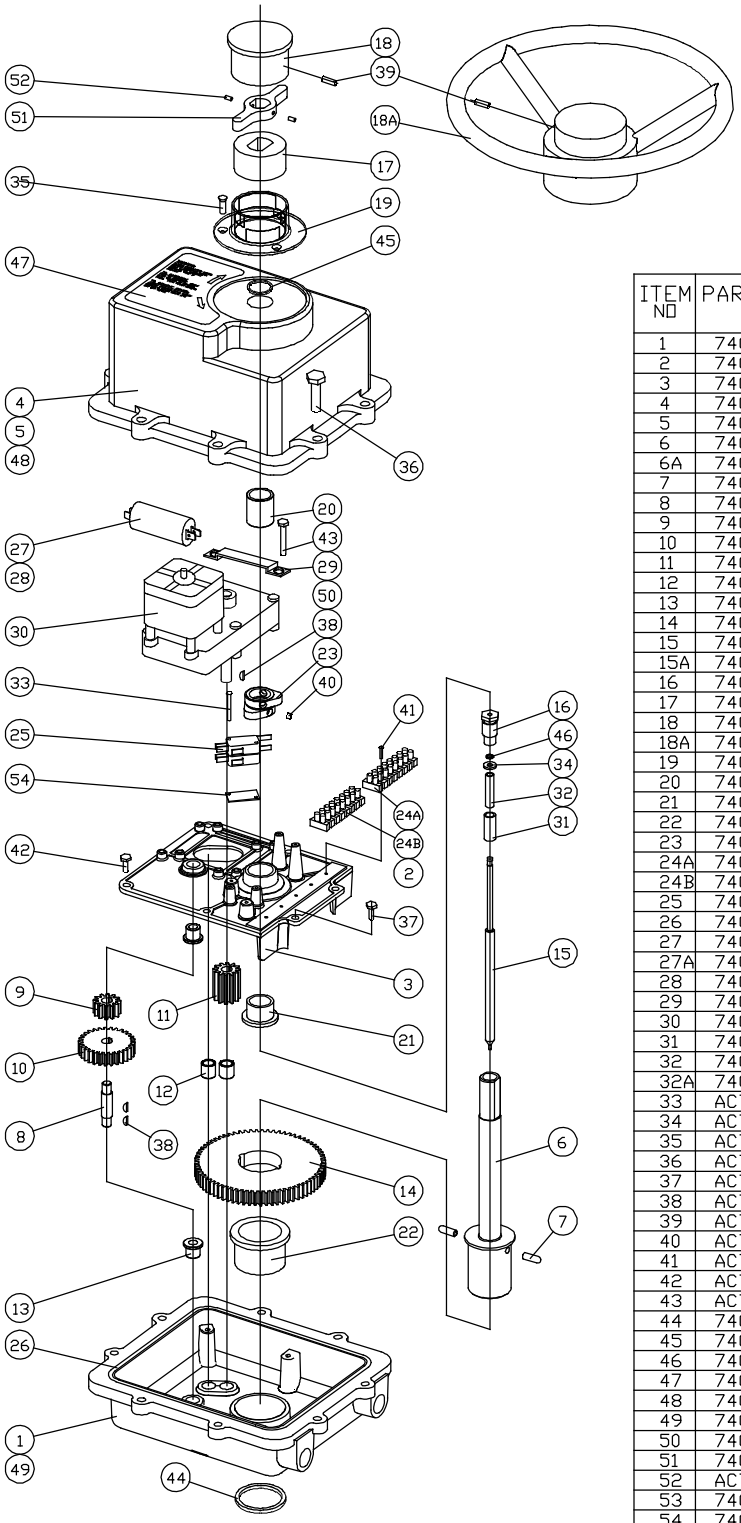

CERTIFIED PRODUCT

NO MODIFICATIONS PERMITTED WITHOUT REFERENCE TO ATEX

SCHEDULE DRAWING

S92= 400 IN*LBS
A92= 700 IN*LBS
B92=1100 IN*LBS
C92=2000 IN*LBS

ITEM NO	PART NO	QUANTITY				DESCRIPTION
		S92	A92	B92	C92	
1	7401920	1	1	1	1	BASE
2	7401440	1	1	1	1	WIRING HARNESS - 4 PCS
3	7401060	1	1	1	1	BASE PLATE
4	7401940	1	1	1	1	COVER
5	7401925	1	1	1	1	WIRING DIAGRAM LABEL
6	7401900	1	1	1		SHAFT MAIN
6A	7401905				1	SHAFT MAIN
7	7401360	2	2	2	2	PIN
8	7401280			1	1	SHAFT STUB
9	7402003			1	1	SPUR GEAR 1B
10	7402002			1	1	SPUR GEAR 1A
11	7401400	1	1	1	1	GEAR PINION
12	7401540	1	1	1	1	BEARING PINION
13	7402006			2	2	BEARING FL - SPUR GEAR
14	7401380	1	1	1	1	GEAR MAIN
15	7401200	1	1	1		SHAFT INNER
15A	7401210				1	SHAFT INNER
16	7401180	1	1	1	1	SHAFT RETAINER
17	7401300	1	1	1	1	KNOB LOWER
18	7401320	1	1	1		KNOB UPPER
18A	7401995				1	HANDWHEEL
19	7401260	1	1	1	1	COLLAR
20	7401120	1	1	1	1	BEARING UPPER COVER
21	7401080	1	1	1	1	BASE PLATE BEARING
22	7401020	1	1	1	1	BASE BEARING
23	7401480	2	2	2	2	CAM
24A	7401420	2	2	2	2	TERMINAL BLOCK 1-8
24B	7401425	2	2	2	2	TERMINAL BLOCK 9-16
25	7401460	2	2	2	2	MICRO SWITCH (V7-6C13D8-132)
26	7401560	1	1	1	1	O-RING BASE/COVER
27	7401948	1		1		CAPACITOR 4.2 MFD
27A	7402004		1			CAPACITOR 6.7 MFD
28	7403008				1	CAPACITOR 7.6 MFD
29	7401520	1	1	1	1	CAPACITOR BRACKET
30	7401340	1	1	1	1	MOTOR
31	7401250	1	1	1	1	SHELL
32	7401220	1	1	1		SPRING
32A	7401230				1	SPRING
33	ACTMSC	2	2	2	2	SCREW ROUND HD. 4-40 x 1.00 LG
34	ACTMSC	1	1	1	1	WASHER, FLAT #10 Ø.450 x .06 THK
35	ACTMSC	3	3	3	3	SCREW FLAT HD. 8-32 x .25 LG. SS.
36	ACTMSC	8	8	8	8	SCREW HEX HD. 5/16-18 x 1.00 LG. SS.
37	ACTMSC	1	1	1	1	SCREW SELF TAP (GREEN) #10 x .50 LG.
38	ACTMSC	1	1	3	3	KEY, WOODRUF 3/32
39	ACTMSC	1	1	1	1	SCREW SLOT SET 8-32 x .50 LG. SS.
40	ACTMSC	4	4	4	4	SCREW SET 8-32 x .12 LG.
41	ACTMSC	4	4	4	4	SCREW SELF TAP #4 x .50 LG.
42	ACTMSC	5	5	5	5	SCREW SELF TAP SLOT/HEX #10 x .50 LG.
43	ACTMSC	4	4	4	4	SCREW SLOT/HEX 10-32 x 1.62 LG.
44	7401040	1	1	1	1	SEAL BASE
45	7401140	1	1	1	1	SEAL COVER
46	7401580	1	1	1	1	O-RING SHAFT
47	7401950	1	1	1	1	OVERRIDE LABEL
48	7401960	1	1	1	1	COVER NAMEPLATE
49	7401970	1	1	1	1	BASE NAMEPLATE
50	7401430	1	1	1	1	CAPACITOR HARNESS- 2 PCS
51	7401485				1	HANDWHEEL CAM
52	ACTMSC				2	CAM SCREW SET 1/4-20 x /250 LG.
53	7401971	1	1	1	1	OPTION WIRING DIAGRAM
54	7403240	1	1	1	1	NOMEX INSULATOR PLATE (220VAC ONLY)

THIS DRAWING AND ALL INFORMATION HEREON IS THE PROPERTY OF ASAHI/AMERICA. ANY COPYING, REPRODUCTION OR UNAUTHORIZED USE IS FORBIDDEN WITHOUT WRITTEN CONSENT.

	NAME	DATE
DR	J.GLASSFORD	6/18/07
CHK	D.HURLEY	6/18/07
APPD	L.LESTER	6/19/07

DO NOT SCALE DRAWING

ASAHI/AMERICA
ISO 9001 CERTIFIED
35 GREEN STREET, P.O. BOX 653, MALDEN, MA.

SERIES 92 EXPLODED VIEW

SIZE	DWG. NO.	REV
A	289S92	E

SCALE NTS

SHEET 1 OF 1

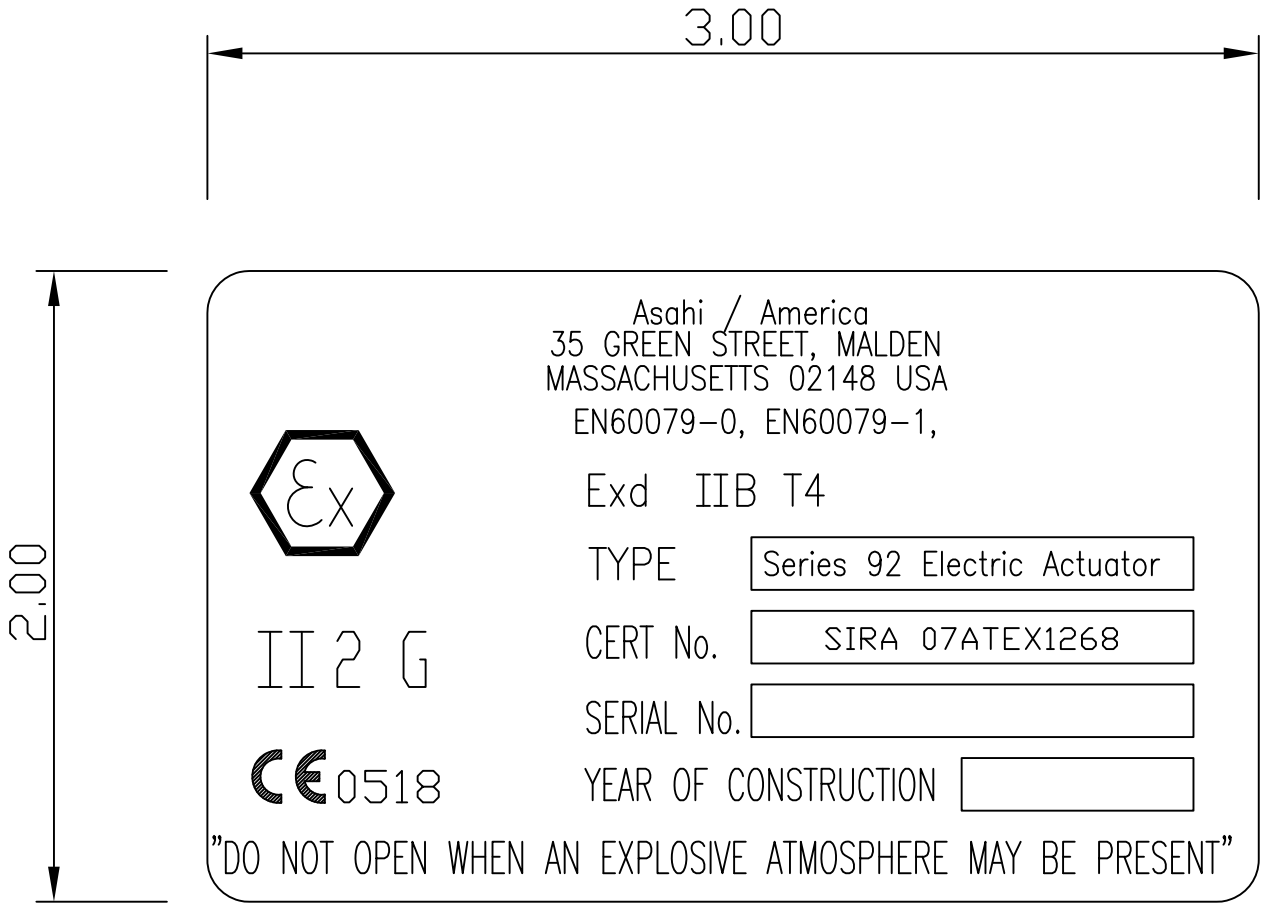

NOTE:
ALL THE SQUARES ARE TO BE FILLED IN WITH THE RELEVANT INFORMATION BY HARD STAMPING

THIS DRAWING AND ALL INFORMATION HEREON IS THE PROPERTY OF ASAHI/AMERICA. ANY COPYING, REPRODUCTION OR UNAUTHORIZED USE IS FORBIDDEN WITHOUT WRITTEN CONSENT.

	NAME	DATE
DR	JOHN GLASSFORD	7/8/08
APPD	DAVE HURLEY	7/8/08
PROD		
WO#/SO#		
FILE		

ASAHI/AMERICA
ISO 9001 CERTIFIED
35 GREEN STREET, P.O. BOX 653, MALDEN, MA.

SERIES 92 PRODUCT ATEX - ID LABEL

SIZE	DWG. NO.	REV
A	M00EL610	B
SCALE NONE		SHEET 1 OF 1