CALL TOLL FREE 877-742-2878 FOR SALES AND SUPPORT Return to BurtProcess.com

STENNER PUMPS

SIKA VK300 OR VK325 SERIES FLOW SWITCH
Operating Manual

The Stenner Pump Company is providing Sika's Operating Manual for the VK300 OR VK325. Flow Switch, Stenner part number **EC500** or **EC501.**

NOTICE: Indicates special instructions or general mandatory action.

- Read the Sika Series Flow Switch Operating Manual and adhere to all warnings and safety precautions prior to installing flow switch.
- Note that the flat seal is mounted with the protecting cap on the flow switch.
- For the PVC flow switch, the activation points are 1.2 GPM for the 3/4" and 1.9 GPM for the 1". The nominal activation points are based on installing in a Spears 3/4", and 1" respectively, schedule 80 PVC tees.

This information is not intended for specific application purposes. Stenner Pump Company reserves the right to make changes to prices, products, and specifications at any time without prior notice.

INSFF 041921

© Stenner Pump Company All Rights Reserved

Operating Manual

SIKA USA Inc.

VK300 Series Flow Switch

With glue-in adapters for PVC only applications

VK320M

&

VK325M



Table of contents

	Page
1 Functional principle	2
2 Switch points	2
3 Electrical connection	2
4 Technical Data	2
5 General Installation instructions	3
5.1 Other Installation instructions	3
6 Handling instructions	4
7 Safety instructions	5
7.1 Qualified personnel	5
7.2 Special Safety instructions	5
7.3 Additional information for flow switches, VK-x	6

1 Functional Principle

The following table explains the working contact:

Type of contact	Flow volume:	Electrical contact
Working contact (make contact)	increasing	making
	decreasing	breaking

2 Switch Points

1. The flow switch is equipped with an adjusted switch point on delivery and is designed to be maintenance free. User adjustment is NOT recommended.

3 Electrical Connection

Caution: Switch off the electrical system before you connect leads of the supply cable.

Brown / blue = connections for Reed contact

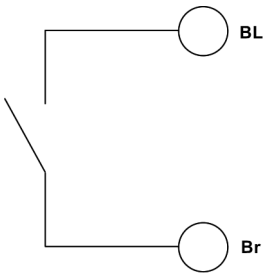

The reed contact is electrically insulated (class II) and integrated into a plastic housing.

When affixing the supply cable to the flow switch, be sure to not expose the cable to excessive tension (max. 15 N).

***CAUTION:** **The maximum electrical contact capacity of 1 Amp should never be exceeded,** else the reed contact - which is integrated in the switching unit - will be damaged. The switching capacity is reduced with inductive loads. Use a relay for loads more than ½" Amp.

4 Technical data

⇒ The technical data of special versions (customised versions) can deviate from the details in these instructions. Please observe the details on the label.

Nominal pressure	PN 10
Max. temperature of medium	+100° C
Max. ambient temperature	+70° C
Protection class	IP 65
Max. switching current	1 A
Max. switching voltage	230 VAC, 48 VDC
Max. switching capacity	26 VA, 20 W
Cross-section of supply cables	2 x 0.5 Sq. mm

SiKA USA Inc. • 1500 S. Sylvania Ave. • Suite 109 • WI 53177 • ☞ 262 886-2695 • 🖷 262 321-0604 • info@sika-usa.com • www. sika-usa.com

5 General Installation Instructions

- At first clean the piping system where the flow switch should be installed and remove any magnetic particles such as weld spatters.
- The norminal fitting position of the flow switch is upright in the horizontal pipe.
- Install the switch only vertically, max. deviation is 45° (fig.1).
- Make sure that there are no strong magnetic fields close to the flow switch. Such fields can affect the proper function of the instrument (fig. 2).
- There is an arrow on the flow switch. Make absolutely sure that this arrow is parallel with the pipe axis and points into flow direction (fig.2).
- Screw on the union nut ¾" with a maximum torque of 8 Nm - this is approximately hand tight.

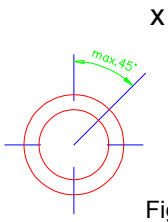

Fig.1

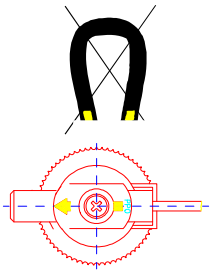
Fig.2

5.1 Other Installation Instructions

Flow switches with PVC glue-in adapters for PVC pipes only

- Follow assembly illustration at right.
- In order to ensure a proper seal between the adapter and the switch, be sure the gasket provided is installed properly.
- Seal the pipe at the PVC fitting with a suitable bonding.
- Install the control switch in such a way that the paddle does not touch the pipe wall.

Proper assembly for PVC adapters

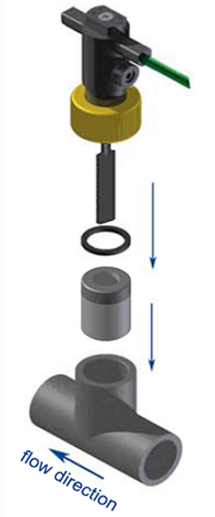

SiKA USA Inc. • 1500 S. Sylvania Ave. • Suite 109 • WI 53177 • ☞ 262 886-2695 • 🖷 262 321-0604 • info@sika-usa.com • www. sika-usa.com

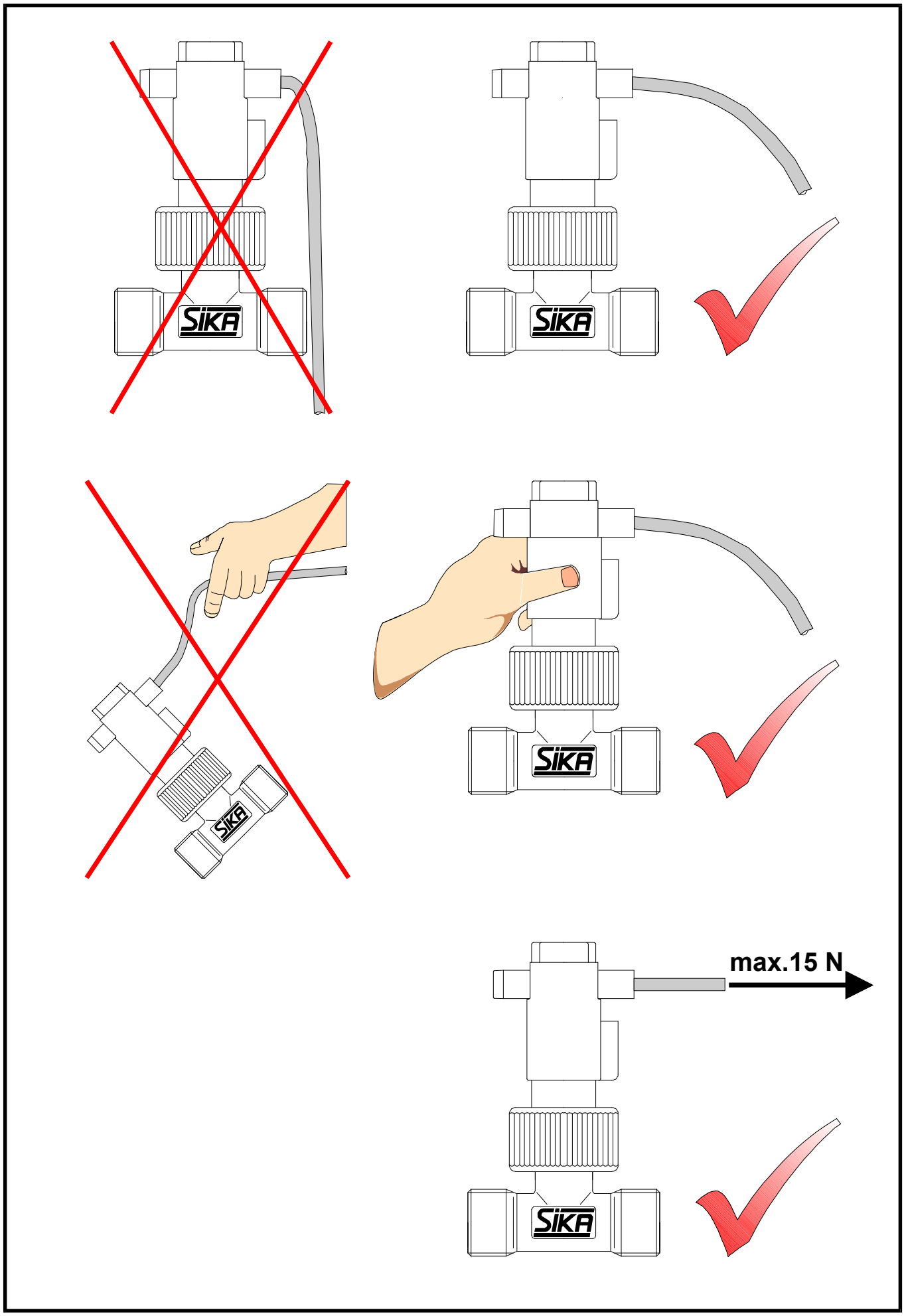

SiKA USA Inc. • 1500 S. Sylvania Ave. • Suite 109 • WI 53177 • ☞ 262 886-2695 • 🖷 262 321-0604 • info@sika-usa.com • www. sika-usa.com

7 Safety instructions

Always read these operating instructions carefully prior to installing the new product. Always adhere to the instructions contained herein, especially the safety instructions, otherwise there is a potential risk of personal injury and damage to instruments and plants.

Even though SIKA provides assistance through personal consultation or the respective literature, it is the responsibility of the customers to determine the suitability of the product for the specific application.

The flow switches are state-of-the-art devices. This concerns switching point accuracy, functioning and safe operation of the device.

However, professional and safety conscious conduct of the operator is required to ensure safe operation.

7.1 Qualified personnel

- The personnel entrusted with installing, operating and maintaining the flow switches have to be suitably qualified; the required knowledge can be gained via training courses or appropriate on-the-job instruction. The personnel have to be familiar with the contents of these instructions, which have to be available to them at all times.
- The electrical connection should only be carried out by a fully qualified electrician.
- All work has to be carried out in accordance with existing national regulations on accident prevention and safety at work and with any internal regulations of the operator, even if they are not specified in these instructions.

7.2 Special safety instructions

- The operational safety of the supplied equipment is only guaranteed if it is operated according to its intended use. The specified limit values (see the chapter entitled “Technical data“) should never be exceeded.
- To avoid damages to the flow switch and the monitored system, only use SIKA flow switches for minimum or maximum monitoring of the flow of liquids.
- Always follow and adhere to the flow switch installation instructions.
- Never operate the flow switch in systems which have a greater flow rate than the specified max. flow rate. Otherwise it will cause irreparabledamage to the flow switch.
- Prior to flow switch installation, ensure that all the materials of the flow switch are chemically and mechanically-resistant to the medium which is to be monitored and to all external factors.
- Ensure that the medium is free from magnetic particles.
- Suitable measures should be taken to prevent the medium from freezing.
  If the flow switch is to be used in ambient temperatures of <4 °C, do not carry out any operation beforehand with pure water, e.g. a test run. Residual water in the flow switch can result in frost damage.
- No greases, oils etc. should be used during the installation of the VK... devices due to the material resistance.
- Ensure that the max. specified operating pressure is not exceeded.
- Never remove a flow switch or its upper parts from a pipe system under pressure.
- If the medium which is to be monitored is very hot, the flow switches or their connection fittings will also become very hot. In this case, neither touch the flow switch nor place any heat-sensitive objects in its vicinity.
- Protect the flow switch against external magnetic fields in the immediate vicinity, since these can impair device functioning.
- The technical data of special versions (customised versions) can deviate from the details in these instructions. Please observe the details on the type plate.
- **Caution: Danger of death due to high voltages!**
  Always de-energize the system before connecting the connector cable.
- It is prohibited to remove or make type plates or any other information attached to the equipment indecipherable, otherwise all warranties and the responsibility of the manufacturer no longer apply.

SiKA USA Inc. • 1500 S. Sylvania Ave. • Suite 109 • WI 53177 • ☞ 262 886-2695 • 🖷 262 321-0604 • info@sika-usa.com • www. sika-usa.com

7.3 Additional information for flow switch version VH...X

- The flow switch should only come into contact with media with a minimum ignition temperature of >135 °C and ignition energy of >60µJ.
- When installing and before starting-up, it is to be guaranteed that the mechanical process connections are technically tight.
- Always consider the impermeability of the screwing elements for the zone allocation. Depending on the operating conditions, it may be necessary to regularly check the impermeability of the screwing elements.

CAUTION: Ensure that the maximum electrical contact load specified on the type plate is never exceeded; otherwise the reed contact integrated in the switching unit will be damaged.
The switching capacity is reduced with inductive loads. Details of the protective circuit can be requested from the manufacturer.
If problems or questions arise, please contact your supplier of SIKA directly:

Dr. Siebert & Kühn GmbH & Co. KG - USA
1500 S. Sylvania Ave., Suite 109, Sturtevant,WI 53177
☎: (262) 886-2695, Fax: (262) 321-0604
info@sika-usa.com , www.sika-usa.com