CALL TOLL FREE 877-742-2878 FOR SALES AND SUPPORT
Return to BurtProcess.com

STENNER PUMPS®
PERISTALTIC METERING PUMPS SINCE 1957

ECON LD PUMP SERIES

PERISTALTIC METERING PUMP

INSTALLATION AND MAINTENANCE MANUAL

⚠WARNING

TO BE INSTALLED AND MAINTAINED BY PROPERLY TRAINED PROFESSIONAL INSTALLER ONLY. READ MANUAL & LABELS FOR ALL SAFETY INFORMATION & INSTRUCTIONS.

TABLE OF CONTENTS

Warranty and Service Policy 3

Safety Instructions 4-6, 9-12, 14-18, 20-22, 24

Materials of Construction 7

Accessories 8

Flow Rate Outputs 9-10

Installation..... 11-17

Troubleshooting 18-20

Tube Replacement 21-23

Cleaning the Point of Injection..... 24-26

Exploded View and Parts 27-28

Mounting Template 29

IMELD 101321

WARRANTY AND CUSTOMER SERVICE

LIMITED WARRANTY

Stenner Pump Company will for a period of one (1) year from the date of purchase (proof of purchase required) repair or replace at our option all defective parts. Stenner is not responsible for any removal or installation costs. Pump tube assemblies and rubber components are considered perishable and are not covered in this warranty. Pump tube will be replaced each time a pump is in for service, unless otherwise specified. The cost of the pump tube replacement will be the responsibility of the customer. Stenner will incur shipping costs for warranty products shipped from our factory in Jacksonville, Florida. Any tampering with major components, chemical damage, faulty wiring, weather conditions, water damage, power surges, or products not used with reasonable care and maintained in accordance with the instructions will void the warranty. Stenner limits its liability solely to the cost of the original product. We make no other warranty expressed or implied.

RETURNS

Stenner offers a 30-day return policy on factory direct purchases. Except as otherwise provided, no merchandise will be accepted for return after 30 days from purchase. To return merchandise at any time, call Stenner at 800.683.2378 for a Return Merchandise Authorization (RMA) number. A 15% re-stocking fee will be applied. Include a copy of your invoice or packing slip with your return.

DAMAGED OR LOST SHIPMENTS

Check your order immediately upon arrival. All damage must be noted on the delivery receipt. Call Stenner Customer Service at 800.683.2378 for all shortages and damages within seven (7) days of receipt.

SERVICE & REPAIRS

Before returning a pump for warranty or repair, remove chemical from pump tube by running water through the tube, and then run the pump dry. Following expiration of the warranty period, Stenner Pump Company will clean and overhaul any Stenner metering pump for a minimum labor charge plus necessary replacement parts and shipping. All metering pumps received for overhaul will be restored to their original condition. The customer will be charged for missing parts unless specific instructions are given. To return merchandise for repair, call Stenner at 800.683.2378 or 904.641.1666 for a Return Merchandise Authorization (RMA) number.

DISCLAIMER

The information contained in this manual is not intended for specific application purposes. Stenner Pump Company reserves the right to make changes to prices, products, and specifications at any time without prior notice.

TRADEMARKS

Santoprene® is a registered trademark of Exxon Mobil Corporation.
AquaShield™ is a trademark of Houghton International.

IMPORTANT SAFETY INSTRUCTIONS

When installing and using this electrical equipment, basic safety precautions should always be followed, including the following:

1. **READ AND FOLLOW ALL INSTRUCTIONS.**
2. **WARNING** - To reduce the risk of injury, do not permit children to use this product unless they are closely supervised at all times.
3. **WARNING** - VAC Models only: Risk of Electric Shock. Connect only to a branch circuit protected by a ground-fault circuit interrupter (GFCI). Contact a qualified electrician if you cannot verify that the receptacle is protected by a GFCI.
4. **WARNING** - VAC Models only: To reduce the risk of electric shock, replace damaged cord immediately.
5. **SAVE THESE INSTRUCTIONS.**

SAFETY INFORMATION

⚠ WARNING **Warns about hazards that CAN cause death, serious personal injury, or property damage if ignored.**

ELECTRIC SHOCK HAZARD

VAC MODELS ONLY

⚠ WARNING **ELECTRIC SHOCK HAZARD**

Pump supplied with grounding power cord and attached plug. To reduce risk of electrical shock, connect only to a properly grounded, grounding type receptacle. Install only on a circuit protected by a Ground-Fault Circuit-Interrupter (GFCI). For locations other than US and Canada, pump must be supplied through a residual current device (RCD) with a rated residual operating current < 30 mA.

⚠ AVERTISSEMENT **DANGER DE CHOC ÉLECTRIQUE**

La pompe est dotée d'un cordon d'alimentation avec mise à la terre muni d'une fiche. Pour réduire le risque de choc électrique, branchez uniquement sur une prise correctement mise à la terre. Installez uniquement sur un circuit protégé par un disjoncteur différentiel. En dehors des États-Unis et du Canada, la pompe doit être alimentée par un dispositif à courant différentiel résiduel (RCD) fonctionnant à <30 mA.

DO NOT alter the power cord or plug end.

DO NOT use receptacle adapters.

DO NOT use pump with a damaged or altered power cord or plug end. Contact the factory or an authorized service facility for repair.

⚠ WARNING **HAZARDOUS VOLTAGE**

DISCONNECT power cord before removing motor cover for service. **Electrical service by trained personnel only.**

⚠ WARNING **EXPLOSION HAZARD**

This pump is not explosion proof. **DO NOT** install or operate in an explosive environment.

⚠ WARNING **RISK OF EXPOSURE**

Potential for burns, fire, explosion, personal injury, or property damage. To reduce risk of exposure, the use of proper personal protective equipment is mandatory.

⚠ WARNING **RISK OF FIRE HAZARD**

DO NOT install or operate on any flammable surface.

⚠ WARNING **RISK OF CHEMICAL OVERDOSE**

To reduce risk, follow proper installation methods and recommendations. Check your local codes for additional guidelines.

⚠ WARNING To reduce the risk of injury, do not permit children to use this product. This appliance is not to be used by persons with reduced physical, sensory or mental capabilities, or lack of experience and knowledge, unless they have been given supervision or instruction.

SAFETY INFORMATION continued

⚠ CAUTION Warns about hazards that WILL or CAN cause minor personal injury or property damage if ignored.

⚠ CAUTION PLUMBING

Metering pump installation must always adhere to your local plumbing codes and requirements. Be sure installation does not constitute a cross connection. Check local plumbing codes for guidelines.

⚠ CAUTION The pump has been evaluated for use with water only.

NOTICE: Indicates special instructions or general mandatory action.

This metering pump is portable and designed to be removable from the plumbing system without damage to the connections.

Before installing or servicing the pump, read the pump manual for all safety information and complete instructions. The pump is designed for installation and service by properly trained personnel.

Installation and product must adhere to all regulatory and compliance codes applicable to the area.

⚠ This is the safety alert symbol. When displayed in this manual or on the equipment, look for one of the following signal words alerting you to the potential for personal injury or property damage.

⚠ Acceptable for indoor and outdoor use.

⚠ Acceptable pour une utilisation aussi bien à l'intérieur qu'à l'extérieur.

⚠ Electrical installation should adhere to all national and local codes. Consult a licensed professional for assistance with proper electrical installation.

⚠ Removing power from pool/spa recirculation pump must also remove power from feed pump.

⚠ The use of an auxiliary safety device (not supplied), such as a flow switch or sensor, is recommended to prevent feed pump operation in the event of a recirculation pump failure or if flow is not sensed.

⚠ Point of injection should be beyond all pumps, filters, and heaters.

⚠ Maximum liquid temperature = 40°C.

MATERIALS OF CONSTRUCTION

All Housings
Polycarbonate

Pump Tube
Santoprene® (FDA approved)

Pump Head Rollers
Polyethylene

Check Valve Duckbill
Santoprene® (FDA approved) or FKM (NSF approved)

Suction/Discharge Tubing & Ferrules
Polyethylene (FDA approved)

Suction Line Strainer and Cap
PVC or Polypropylene (both NSF listed); ceramic weight

Tube & Injection Fittings
PVC or Polypropylene (both NSF listed)

Connecting Nuts
PVC or Polypropylene (both NSF listed)

All Fasteners
Stainless Steel

ACCESSORIES

Contents

3 Connecting Nuts 1/4"

3 Ferrules 1/4" or 6 mm *Europe*

1 Injection Check Valve

1 Weighted Suction Line Strainer 1/4" or 6 mm *Europe*

1 20' Roll of Suction/Discharge Tubing
1/4" White or UV Black OR 6 mm White *Europe*

1 Additional Pump Tube

1 Manual

FLOW RATE OUTPUTS

Item Number Prefix	Pump Tube	Roller Assembly	Approximate Turndown Ratio	Ounces per Hour	Pressure Max. psi	Milliliters per Hour	Pressure Max. bar
E10LHM	M	White	50:1	0.04–2.4	80	1.3–70.0	5.5
E10LHF	F	White	50:1	0.11–8.1	80	3.2–240.0	5.5
E10LHG	G	Black	50:1	0.50–25.1	80	14.8–742.3	5.5
E10LHH	H	Black	50:1	1.01–50.7	80	29.7–1499.4	5.5

Approximate Maximum Outputs @ 50/60Hz

NOTICE: The information within this chart is solely intended for use as a guide. The output data is an approximation based on pumping water under a controlled testing environment. Many variables can affect the output of the pump. Stenner Pump Company recommends that all metering pumps undergo field calibration by means of analytical testing to confirm their outputs.

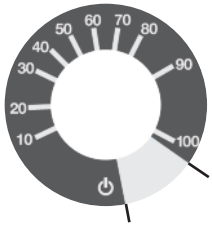

DO NOT set potentiometer in gray area of scale

The output on the variable speed pump can be adjusted via the potentiometer on the side of the pump.

Turning the potentiometer fully counterclockwise turns the pump off.

Turning the potentiometer clockwise gradually increases the speed to 100% at the full clockwise position. Graduations are approximate.

INSTALLATION

ADDITIONAL SAFETY INSTRUCTIONS

NOTICE: Indicates special instructions or general mandatory action.

- **Read all safety hazards before installing or servicing the pump. The pump is designed for installation and service by properly trained personnel.**
- **Use all required personal protective equipment when working on or near a metering pump.**
- **Install the pump so that it is in compliance with all national and local plumbing and electrical codes.**
- **Use the proper product to treat potable water systems, use only additives listed or approved for use.**
- **Inspect tube frequently for leakage, deterioration, or wear. Schedule a regular pump tube maintenance change to prevent damage to pump and/or spillage.**
- **Pump is not recommended for installation in areas where leakage can cause personal injury or property damage.**

24VDC MODELS

POWER INSTRUCTIONS

24VDC Econ models can be controlled by turning on and off the 24VDC power. Electrical installation should adhere to all national and local codes. Consult a licensed professional for assistance with proper electrical installation. The installer is responsible for sizing the equipment used with this pump. Connect power lead wires to a 24VDC power supply.

Red = +24VDC
Black = –24VDC

FUSE INFORMATION

Pump is supplied with a standard 2 amp blade fuse located inside the housing.
The fuse holder is taped to the bottom of the housing to keep wires contained when reassembling the pump.

If the fuse fails there is an issue with the pump or power supply.
Identify and correct the issue before changing the fuse.
When changing the fuse be sure to reattach the fuse holder to the tape inside the housing.

INSTALLATION continued

MOUNT PUMP

- **Select a dry location (to avoid water intrusion and pump damage) above the solution tank.**
- **To prevent pump damage in the event of a pump tube leak, never mount the pump vertically with the pump head up.**
- **DO NOT mount pump directly over an open solution tank. Keep tank covered.**
- **Avoid flooded suction or pump mounted lower than the solution container. Draw solution from the top of the tank. Pump can run dry without damage. If pump is installed with a flooded suction, a shut-off valve or other device must be provided to stop flow to pump during service.**
- **To prevent motor damage, verify with a volt meter that the receptacle voltage corresponds with the pump voltage.**

1. Plug cord into receptacle and turn the pump on.
2. Verify rotation of the roller assembly and turn pump off.

INSTALLATION continued

Declaration of Conformity
Standards Used for Conformity Testing and Certification:

EN60335-1	EN55014-1	EN61000-3-3
EN60335-2-41	EN61000-3-2	EN62233

ADDITIONAL INSTRUCTIONS FOR CE PUMPS

ADDITIONAL INSTALLATION INSTRUCTIONS

1. All Class II Pumps located in Zone 1 of swimming pool areas require locating where flooding cannot occur.
2. This pump is intended to be installed as "fixed" as opposed to portable.
3. The pump must be installed in a vertical position as shown in the installation diagram.
4. After installation, the power supply plug must be accessible during use.
5. This unit must be scrapped if the supply cord is damaged.
6. Observe and comply with all National Wiring Standards.

ZUSTAZLICHE INSTALLIERUNGSANWEISUNGUN

1. Pumpen die sich in Zone 1 vom Schwimmbecken befinden sollen sind so einzurichten daß Ueberschwemmungen nicht vorkommen werde.
2. Diese Pumpe ist als fest montierte Ausrustung bedacht und soll nicht umstellbar gebraucht werden.
3. Die Pumpe muss vertikal installiert werden, siehe Zeichnung.
4. Die Stromversorgung muss nach der Installierung noch zuganglich sein.
5. Bei beschadigter Verkabelung ist dieses Gerat nicht mehr zu gebrauchen.
6. Staatliche Vernetzungsvorchriften mussen eingehalten werden.

INSTRUCTIONS SUPPLÉMENTAIRES D'INSTALLTION

1. Toutes les pompes installées dans la Zone 1 du périmètre de la piscine doivent être situées de manière à ne pas pouvoir être inondées.
2. Cette pompe est prévue pour installation fixe et non pas portative.
3. La pompe doit être installée en position verticale selon le dessin.
4. Après l'installation, la prise électrique doit rester accessible pendant l'utilisation.
5. Cette unité doit être mise au rebut si le cordon électrique est endommagé.
6. Observez et adhérez à toutes les Normes Nationales pour Installations Electriques.

INSTRUCCIONES ADICIONALES PARA INSTALACION

1. Todas las bombas Clase II situadas en la Zona 1 de las áreas de la piscina requieren colocarse donde no puedan ser inundadas.
2. Esta bomba es para ser instalada "fija" en vez de portátil.
3. La bomba debe ser instalada en posición vertical como se muestra en el diagrama de instalación.
4. Depués de la instalación el enchufe suministrador de energía debe estar accesible durante el uso.
5. Se deberá deshechar la unidad si el cordón de abastecimiento se deteriora.
6. Observe y cumpla con todas las Reglas Nacionales para Instalaciones Eléctricas.

ISTRUZIONI SUPPLEMENTARI PER L' INSTALLAZIONE

1. Tutte le pompe Classe II localizzate nella Zona 1 della superficie circostante la piscina devono essere collocate dove gli allagamenti no possono accadere.
2. Questa pompa, é inteso, deve essere installata come 'fissa' e non come portatile.
3. La pompa deve essere installata in posizione verticale come mostrato sul disegno.
4. Dopo l'installazione, la spina deve essere accessibile durante l'uso.
5. Questa unitá deve essere gettata via se il filo elettrico é danneggiato.
6. Osservare e aderire a tutte le Norme Nazionali Sugli Impianti Elettrici.

INSTALLATION DIAGRAM

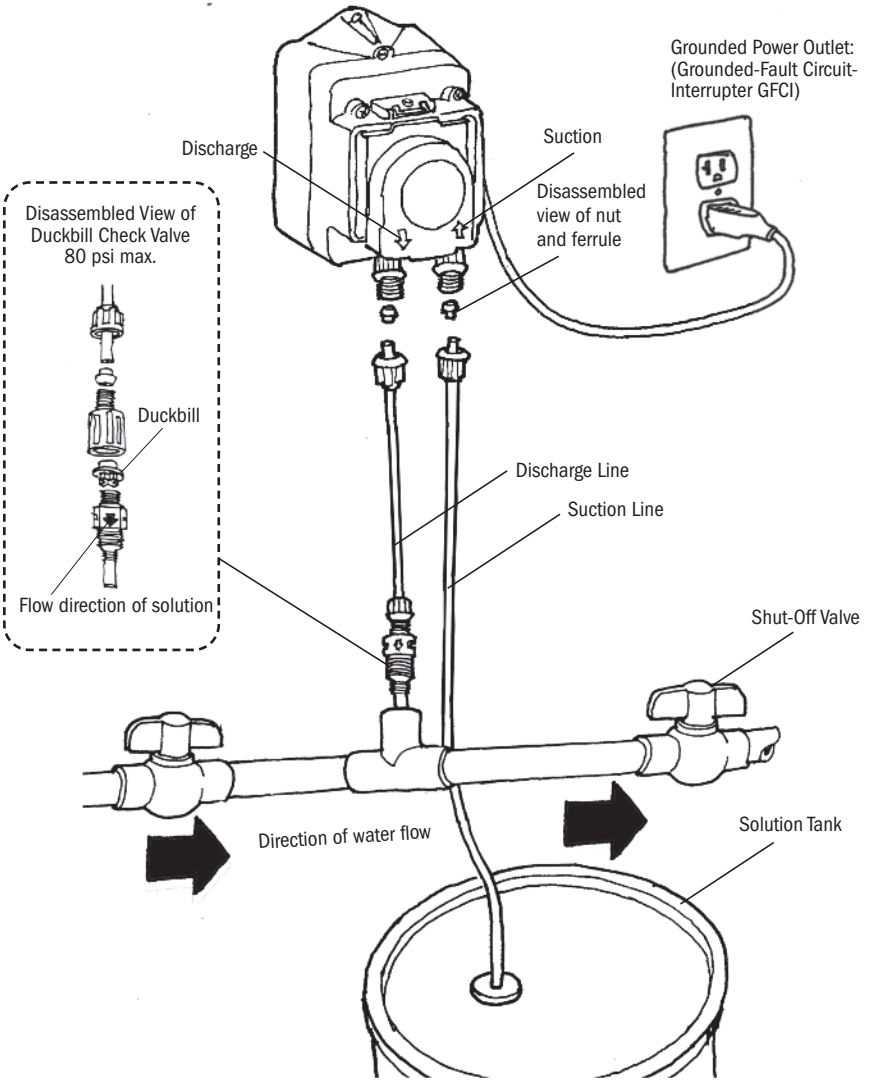

INSTALL SUCTION LINE TO PUMP HEAD

1. Uncoil the suction/discharge line. Use outside of solution tank as a guide to cut proper length of suction line ensuring it will be 2-3" above the bottom of solution tank.

Allow sufficient slack to avoid kinks and stress cracks. Always make a clean square cut to assure that the suction line is burr free. Normal maintenance requires trimming.

Suction lines that extend to the bottom of the tank can result in debris pickup leading to clogged injectors and possible tube failure.

2. Make connections by sliding the line(s) through connecting nut and ferrule and finger tighten to the corresponding tube fittings.

3. Finger tighten nut to the threaded tube fitting while holding the tube fitting.

Over tightening the nut with a wrench may result in damaged fittings, crushed ferrules, and air pick up.

DO NOT use thread sealant tape on pump tube connections or tools to tighten connections.

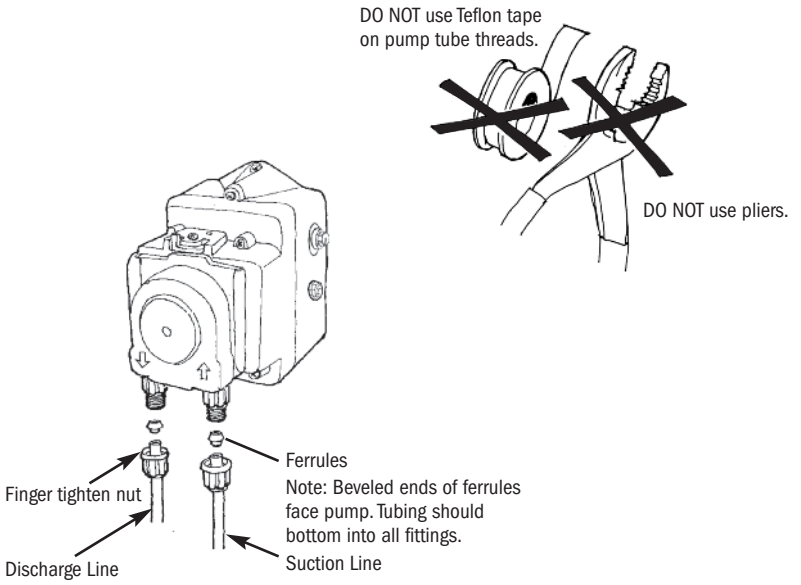

INSTALL SUCTION WEIGHT TO SUCTION LINE

1. Drill a hole into the bung cap or solution tank lid. Slide the tubing through and secure the weighted strainer to the line.
2. To attach the strainer, push approximately 3.5" of suction line through the cap on the strainer body. Pull tubing to make sure it is secure.
3. Suspend slightly above tank bottom to reduce the chance of sediment pickup.

DO NOT mix additives in the solution container. Follow recommended mixing procedures according to the manufacturer.

DO NOT operate pump unless additive is completely in solution. Turn pump off when replenishing solution.

DO NOT slide tubing all the way to the bottom of the weighted strainer. Tubing could become flush with the nose of the strainer and the pump may not prime due to blockage.

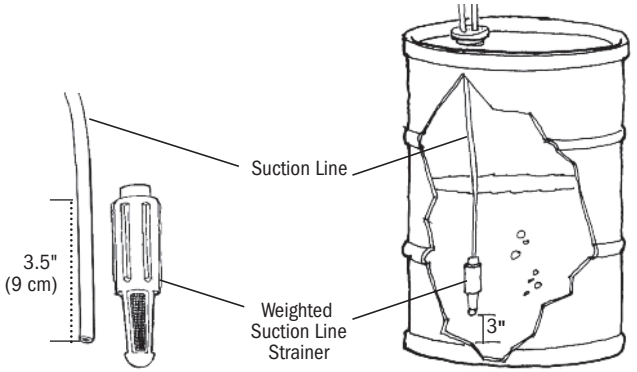

INSTALL DISCHARGE LINE TO PUMP HEAD AND INJECTION POINT

1. Make a secure finger tight connection on the discharge fitting of the pump head as instructed in Install Suction Line instructions.

DO NOT use thread sealant tape on pump tube connections or tools to tighten connections.

⚠ WARNING HAZARDOUS PRESSURE: Shut off water or circulation system and bleed off any system pressure.

Locate a point of injection beyond all pumps and filters or as determined by the application.

2. A 1/4" or 1/2" Female NPT (FNPT) connection is required for installing the injection fitting. If there is no FNPT fitting available, provide one by either tapping the pipe or installing FNPT pipe tee fitting.

3. Wrap the Male NPT (MNPT) end of injection fitting with 2 or 3 turns of threading tape. If necessary, trim the injection fitting quill as required to inject product directly into flow of water.

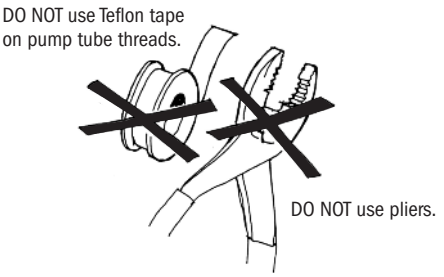

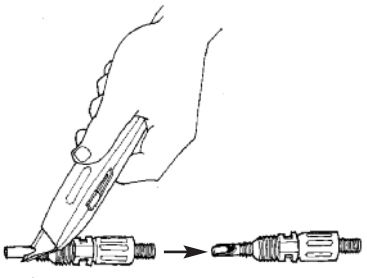
Trim injection fitting end

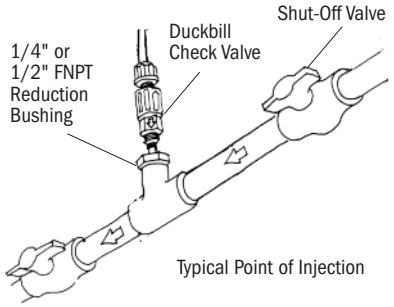

4. Hand tighten the injection fitting into the FNPT fitting.
   a. Install connecting nut and ferrule to the pump discharge tubing. Insert discharge tubing into injection fitting until it reaches base of fitting.
   b. Finger tighten connecting nut to fitting.
5. Turn pump on and re-pressurize system. Observe flow as actuated by system and check all connections for leaks.
6. After suitable amount of dosing time, perform tests for desired readings (e.g., pH or ppm). If necessary, fine tune dosing levels by rotating potentiometer or by adjusting solution strength.

The injection point and fitting require periodic maintenance to clean any deposits or buildup. To allow quick access to the point of injection, Stenner recommends the installation of shut-off valves.

TROUBLESHOOTING DRIVE ASSEMBLY

⚠ WARNING HAZARDOUS VOLTAGE:
DISCONNECT power before service. **Electrical service should be performed by trained personnel only.**

PROBLEM	POSSIBLE CAUSE	SOLUTION
Loud or excessive noise	Insufficient gear lubrication	Apply AquaShield™ to gears and gear posts
	Worn gears or gear posts	Inspect/replace gears and gear posts
Drive assembly does not work	Faulty electrical supply	Check electrical supply
	Damaged DC motor	Replace drive assembly
	Damaged power cord	Replace drive assembly
Drive assembly runs; output shaft does not turn	Worn or damaged gears	Replace gears as needed
	Damaged circuit board	Replace drive assembly
Phenolic gear is stripping	Worn gear posts	Replace gear posts & affected gears
	Rusted helical gear	Buff off helical gear and replace phenolic gear
	Insufficient lubrication	Apply AquaShield™ to gears and gear posts

TROUBLESHOOTING PUMP HEAD

PROBLEM	POSSIBLE CAUSE	SOLUTION
Components are cracking	Chemical attack	Check chemical compatibility
	Chemical intrusion from tube failure	Identify and correct cause. Clean components of chemical and replace tube according to manual
Pump head leaking	Pump tube rupture	Identify and correct cause. Clean components of chemical and replace tube and ferrules according to manual
No pump output; pump head rotates	Depleted solution tank or weighted strainer is above solution	Replenish solution and position suction line 3" above bottom of tank
	Leak in the suction line or at connections	Correct or replace suction line, and/or connections
	Ferrules installed incorrectly, missing or damaged	Replace ferrules, beveled end faces pump
	Injection point is clogged	Inspect and clean injection point
	Clogged suction and/or discharge line and/or check valve	Clean and/or replace as needed
	Life of pump tube is exhausted	Replace tube and ferrules according to manual and schedule tube replacement based on application
	Suction tubing is flush with the nose of the weighted strainer	Pull suction tubing approximately 1" from bottom of strainer; cut bottom of suction tubing at an angle
	Pump cover not secured properly	Ensure that pump cover latch is fully closed
Low pump output; pump head rotates	Life of pump tube exhausted	Replace tube and ferrules according to manual and schedule tube replacement based on application
	Rollers worn or broken	Replace roller assembly
	Injection point is restricted	Inspect and clean injection point regularly
	Incorrect tube size or setting	Refer to flow rate output chart and determine correct setting or replace tube with correct size
	High system back pressure	Confirm system pressure does not exceed 80 psi (5.5 bar) maximum
	Pump cover not secured properly	Ensure that pump cover latch is fully closed
No pump output; pump head doesn't rotate	Stripped roller assembly hub	Replace roller assembly
	Faulty board	Replace drive assembly
	Drive assembly problem	Refer to drive assembly troubleshooting
Pump output is high	Incorrect tube size or setting	Refer to flow rate output chart and determine correct setting or replace tube with correct size
	Roller assembly is broken	Replace roller assembly

TROUBLESHOOTING PUMP TUBE

NOTICE: A leaking pump tube damages the metering pump. Inspect pump frequently for leakage and wear. Refer to Tube Replacement section for additional safety precautions and instructions.

PROBLEM	POSSIBLE CAUSE	SOLUTION
Tube leaking	Pump tube ruptured	Identify and correct cause. Clean components of chemical and replace tube and ferrules according to manual.
	Mineral deposits at injection point	Clean injection fitting. Replace pump tube, ferrules and duckbill according manual.
	Excessive back pressure 80 psi (5.5 bar) maximum	Verify system pressure against tube psi, replace tube and ferrules
	Tube is twisted	Replace tube & ferrules according to manual, hold tube fitting while tightening connecting nut to prevent twisting.
	Tube not centered	Clean components of chemical, replace tube and ferrules according to manual & confirm tube is centered
Tube life is shortened	Chemical attack	Check chemical compatibility
	Mineral deposits at injection point	Clean injection fitting. Replace tube, ferrules & duckbill according to manual
	Sediment blockage at injection fitting	Clean injection fitting, ensure suction line is 3" above tank bottom; use suction line strainer
	Seized rollers caused abrasion on tube	Clean roller assembly or replace, do not lubricate
	Exposure to heat or sun	Do not store tubes in high temperatures or in direct sunlight
Tube connection is leaking or damaged	Ferrules installed incorrectly, missing or damaged	Replace ferrule, beveled end faces pump

TUBE REPLACEMENT SAFETY INFORMATION

⚠ WARNING **RISK OF EXPOSURE**

- To reduce risk of exposure, check the pump tube regularly for leakage. At the first sign of leakage, replace the pump tube.
- To reduce risk of exposure, the use of proper personal protective equipment is mandatory when working on or near metering pumps.
- To reduce risk of exposure, and also prior to service, shipping, or storage, pump generous amounts of water or a compatible buffer solution to rinse pump.
- Consult SDS sheet for additional information and precautions for the additive in use.
- Personnel should be skilled and trained in the proper safety and handling of the additive in use.
- Inspect tube frequently for leakage, deterioration, or wear. Schedule a regular pump tube maintenance change to prevent damage to pump and/or spillage.

⚠ CAUTION **PINCH POINT HAZARD**

- Use extreme caution when replacing pump tube. Be careful of your fingers and **DO NOT** place fingers near rollers.

⚠ WARNING **HAZARDOUS PRESSURE EXPOSURE**

- Use caution and bleed off all resident system pressure prior to attempting service or installation.
- Use caution when disconnecting discharge tubing from pump. Discharge may be under pressure. Tubing may contain fluid being metered.

NOTICE: Indicates special instructions or general mandatory action.

- **DO NOT** apply grease, oil, or lubricants to the pump tube or housing.
- Prior to pump tube replacement, inspect the entire pump head for cracks or damaged components. Ensure rollers turn freely.
- Rinse off fluid residual and clean all fluid and debris from pump head components prior to tube replacement.
- **DO NOT** pull excessively on pump tube. Avoid kinks or damage during tube installation.
- Inspect the suction/discharge tubing, injection point (into pipe), and injection fitting for blockages after any tube rupture. Clear or replace as required.

TUBE REPLACEMENT

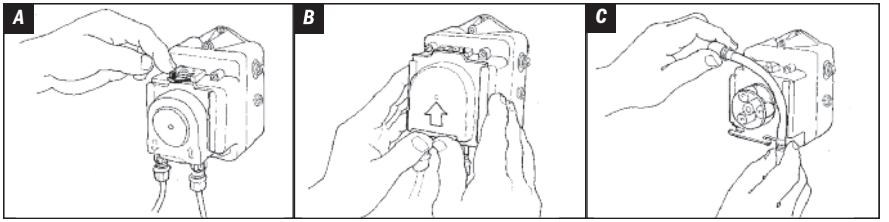

PREPARATION

1. Follow all safety precautions prior to tube replacement.
2. Prior to service, pump water or a compatible buffer solution through the pump and suction/discharge line to remove fluid and avoid contact.
3. Turn pump off.
4. Disconnect the suction and discharge connections from pump head.

REMOVE TUBE

Always unplug pump before doing maintenance work.

1. Unplug the pump.
2. Remove the locking screw on the latch (CE models only). Slide the vertical tab 180 degrees from left to right to unlock the cover latch. *Illustration A*
3. To slide cover off, push up on the raised edge. *Illustration B*
4. Release the fittings from the slots to remove the tube. *Illustration C*
5. Remove roller assembly.
6. Use non-citrus all-purpose cleaner to clean residue from pump head housing, roller, and cover.
7. Check cover for cracks. Replace if cracked.
8. Ensure rollers spin freely.
9. Replace roller assembly if: seized, excessive side play from bore wear, or if rollers are visibly worn.
10. Re-install roller assembly.

TUBE REPLACEMENT continued

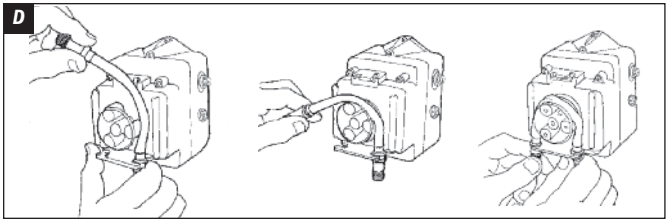

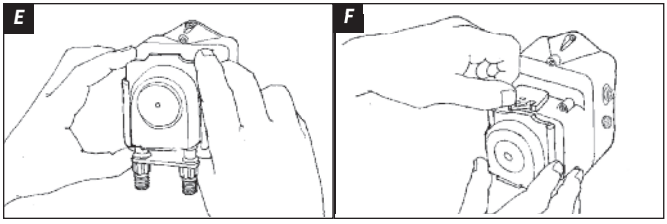

INSTALL NEW TUBE

1. To install new tube, insert one fitting into slot, pull tube around the center of the roller assembly and insert second fitting into the other slot. *Illustration D*
2. Align tube housing cover with track and slide over tube until fully closed. *Illustration E*
3. Plug the pump in.
4. Run the pump at full speed for one minute to relax the tube.
5. To lock cover in place, press down on the cover while turning the vertical tab 180 degrees from right to left. Install the Phillips head locking screw (CE models only). *Illustration F*
6. Run pump at full speed for one minute to verify operation.
7. Reconnect the suction and discharge lines.
8. Prime pump.

CLEANING THE POINT OF INJECTION
SAFETY INFORMATION

NOTICE: Indicates special instructions or general mandatory action.

The injection check valve allows the extension tip to be installed in the center of the pipe directly in the flow of water to help reduce deposit accumulation.

⚠ WARNING Warns about hazards that CAN cause death, serious personal injury, or property damage if ignored.

This is the safety alert symbol. When displayed in this manual or on the equipment, look for one of the following signal words alerting you to the potential for personal injury or property damage.

⚠ WARNING HAZARDOUS PRESSURE/CHEMICAL EXPOSURE

Use caution and bleed off all resident system pressure prior to attempting service or installation.

Use caution when disconnecting discharge line from pump. Discharge line may be under pressure. Discharge line may contain chemical.

To reduce risk of exposure, the use of proper personal protective equipment is mandatory when working on or near chemical metering pumps.

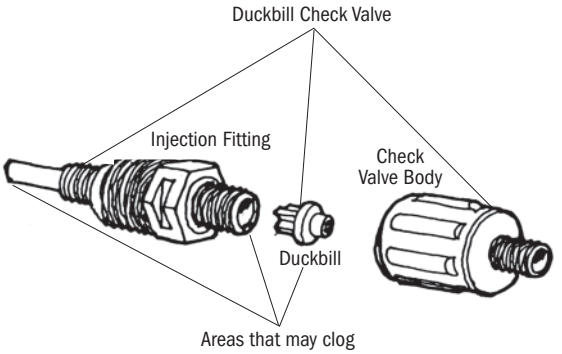

CLEANING THE POINT OF INJECTION continued

1. Turn metering pump off and unplug cord. Disable water pump or auxiliary equipment electrical supply.
2. Depressurize system and bleed pressure from pump discharge line.
3. Loosen and remove connecting nut and ferrule from the injection check valve to disconnect discharge tubing:
   - Unscrew the top fitting (check valve body) to disassemble. The bottom fitting (injection fitting with arrow) should remain attached to the pipe.
   - Remove duckbill from check valve body and replace if deteriorated or swollen (replace duckbill with every tube change). If clogged, clean or replace (yearly replacement recommended).
   - Examine O-ring in the injection fitting and replace if deteriorated or damaged.
4. Insert a #2 Phillips head screwdriver through injection fitting into the pipe to locate or break up accumulated deposits. If screwdriver cannot be inserted, drill the deposit out of the injection fitting (DO NOT drill through the opposite pipe wall).

More on next page

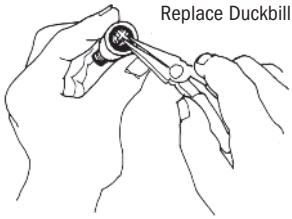



Clean out accumulated deposits with a #2 Phillips head screwdriver.

Periodic inspection and cleaning of the point of injection will maintain proper pump operation and provide maximum tube life.

CLEANING THE POINT OF INJECTION continued

5. Replace discharge line if cracked or deteriorated. If the end is clogged, cut off the calcified or blocked section of discharge line:
   - Reassemble the injection check valve in reverse order.
   - Replace ferrule and reinstall the discharge line to the injection check valve approximately 3/4" until it stops.
6. Tighten the connection nut finger tight.
7. Enable the water pump electrical supply and pressurize the water system.
8. Put the metering pump back in service and inspect all connections for leaks.

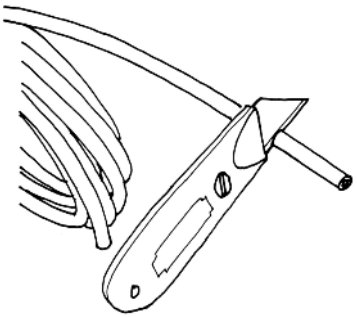

Cut off the calcified or blocked section.

EXPLODED VIEW

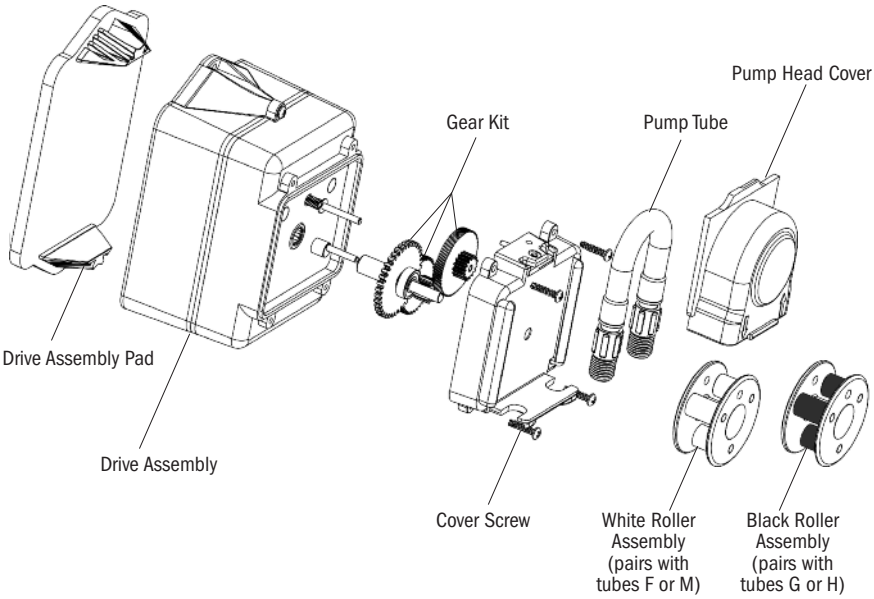

PARTS

DESCRIPTION	PART NUMBER	UM
Gear Kit *includes spacers, screws & AquaShield™*	EC310	KIT
Drive Assembly Pad	EC302	EA
White Roller Assembly (works with tubes F, M)	EC350	EA
Black Roller Assembly (works with tubes G,H)	EC351	EA
F Santoprene® Pump Tube, ferrules 1/4" (works with white roller assembly)	EC30F-2	2-PK
M Santoprene® Pump Tube, ferrules 1/4" (works with white roller assembly)	EC30M-2	2-PK
G Santoprene® Pump Tube, ferrules 1/4" (works with black roller assembly)	EC30G-2	2-PK
H Santoprene® Pump Tube, ferrules 1/4" (works with black roller assembly)	EC30H-2	2-PK
F Santoprene® Pump Tube, ferrules 6 mm *Europe* (works with white roller assembly)	EC30FCE-2	2-PK
M Santoprene® Pump Tube, ferrules 6 mm *Europe* (works with white roller assembly)	EC30MCE-2	2-PK
G Santoprene® Pump Tube, ferrules 6 mm *Europe* (works with black roller assembly)	EC30GCE-2	2-PK
H Santoprene® Pump Tube, ferrules 6 mm *Europe* (works with black roller assembly)	EC30HCE-2	2-PK
Pump Head Cover	EC355	EA
Mounting Kit *for wall mount or Stenner tank*	EC303	KIT
Stand *for horizontal display or wall mount*	EC304	EA

MOUNTING TEMPLATE

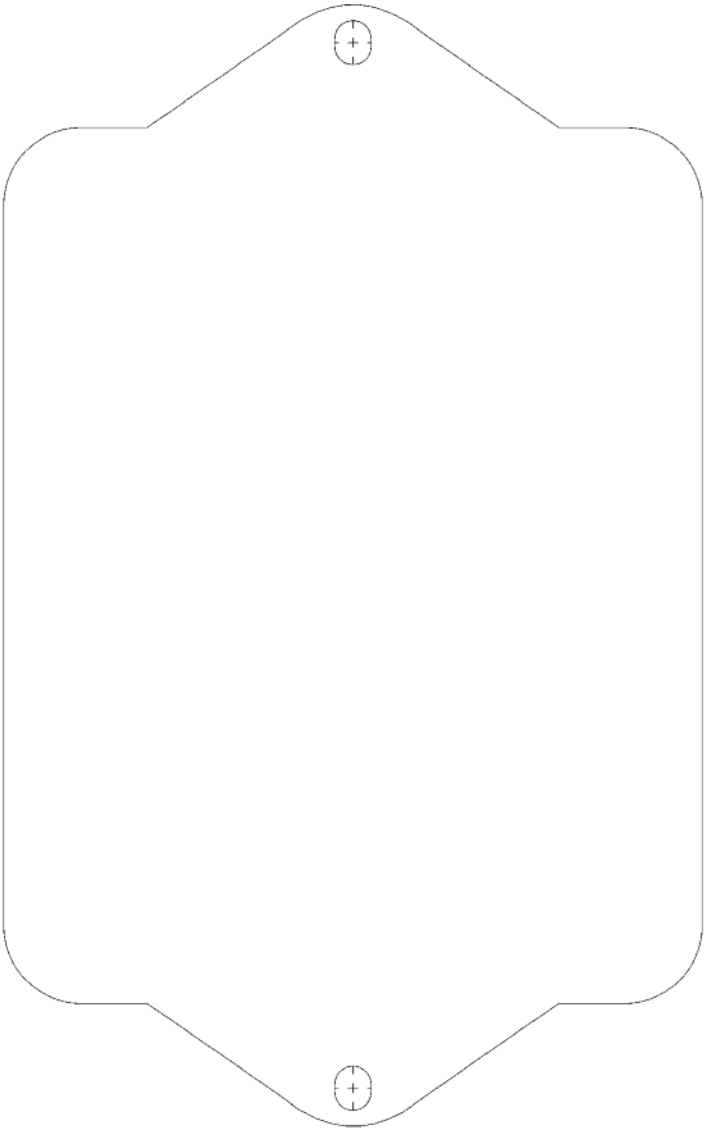

STENNER PUMPS

STENNER PUMP COMPANY

3174 DeSalvo Road
Jacksonville, Florida 32246 USA

Phone: 904.641.1666
US Toll Free: 800.683.2378
Fax: 904.642.1012

sales@stenner.com
www.stenner.com

Hours of Operation (EST):
Mon.–Thu. 7:30 am–5:30 pm
Fri. 7:00 am–5:30 pm

 Assembled in the USA

© Stenner Pump Company
All Rights Reserved

IMELD 101321