CALL TOLL FREE 877-742-2878 FOR SALES AND SUPPORT.
Return to BurtProcess.com

Switch-Tek™

Vertical Buoyancy Liquid Level Switch

FLOWLINE™
LEVEL BEST

LV10 Series Manual



ABOUT SWITCH-TEK™ VERTICAL BUOYANCY LEVEL SWITCH

The Vertical Buoyancy Switch consists of a float, magnet reed switch and baffle body which dampens turbulence and eliminates the negative effects of switch chatter. When the probe is dry, the float rests on the bottom of the baffle body such that the magnet does not influence the reed switch. As the probe becomes immersed in liquid, the float becomes buoyant and the magnet elevates causing the reed switch to change to change.

TABLE OF CONTENTS

Specifications: 3
Dimensions: 3
Safety Precautions:..... 4
Installation: 5
    Top Wall Installation: 5
    Bayonet Connection: 5
    Orientation: 5
    Connection to a Switch Car Kit (LM30 series):: 6
Electrical: 7
Smart Trak and Switch Pak Assemblies: 7
Wiring: 8
Wiring to a Flowline Controller: 8
Maintenance: 9
Warranty: 10

Accuracy:	±2mm in water
Repeatability:	±1mm in water
Orientation:	±20˚ from vertical
Specific Gravity:	0.8 minimum
Contact Type:	(1) SPDT reed
Contact Rating:	15VA, 0.25A max.
Contact Voltage:	120 VAC, 120 VDC @ 15 VA
Contact Output:	Selectable NO/NC
CE Rating:	30 Vrms and 42.4 Vpeak or 60 VDC @ 15 VA
Temperature Range:	F: -40˚ to 176˚ C: -40˚ to 80˚
Pressure Range:	25 psi (2 bar) @ 25˚ C., derated @ 1.667 psi (.115 bar) per ˚C. above 25˚ C.
Sensor Rating:	NEMA 6 / IP68
Sensor Material:	Polypropylene (PP) Polyvinylidene Fluoride (PVDF)
Cable Type:	3-conductor, 22-gauge, shielded
Cable Length:	10’ (3m)
Cable Material:	PP or FEP jacket
Mounting Threads:	3/4” NPT (3/4” R)
CE Compliance:	EN 61326 EMC EN 61010-1 safety

Switch Rating

Reed Switch Rating		Maximum Resistive Load	
VA	Volts	Amps AC	Amps DC
15	0-50	0.3	0.21
15	120	0.13	0.09
15	240	0.06	0.04

Components

Part Number	Body Material	Cable Material	Thread
LV10-1301	PP	PP	¾” NPT
LV10-1351	PP	PP	¾”R
LV10-5301	PVDF	FEP	¾” NPT
LV10-5351	PVDF	FEP	¾” R

Pressure / Temperature Derating

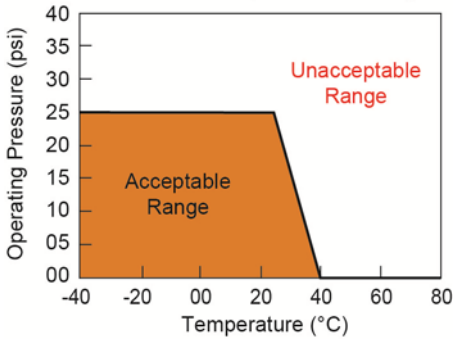

DIMENSIONS

LV10-1301, LV10-1351, LV10-5301, LV10-5351

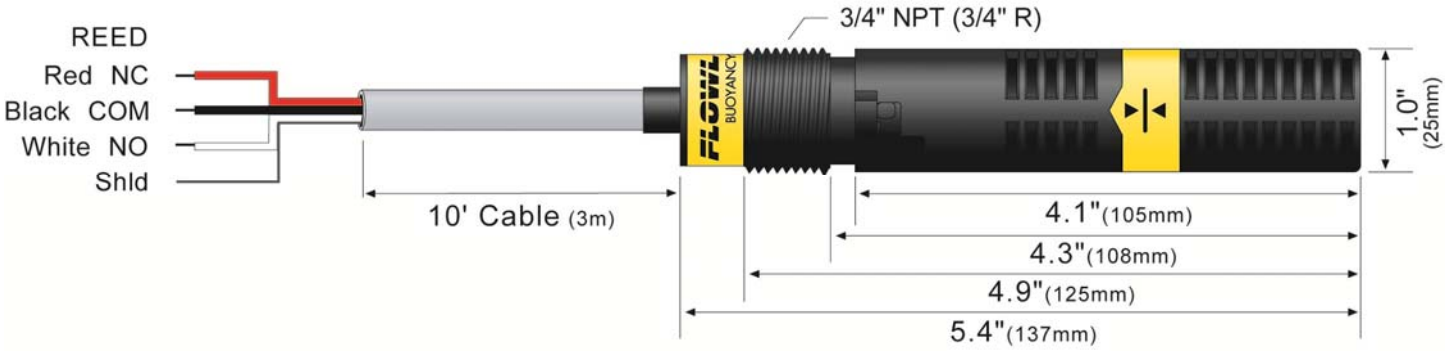

- **About Manual:** PLEASE READ THE ENTIRE MANUAL PRIOR TO INSTALLING OR USING THIS PRODUCT. This manual includes information on the vertical buoyancy, model LV10-_3_1. Please refer to the part number located on the sensor label to verify the exact model which you have purchased.
- **User's Responsibility for Safety:** Flowline manufactures a wide range of liquid level switches and technologies. While each of the these switches are designed to operate in a wide variety of applications, it is the user's responsibility to select a switch model that is appropriate for the application, install it properly, perform tests of the installed system, and maintain all components. The failure to do so could result in property damage or serious injury.
- **Proper Installation and Handling:** Because this is an electrically operated device, only properly trained staff should install and/or repair this product. Use a proper sealant with all installations. Never over tighten the sensor within the fitting, beyond a maximum of 80 inch-pounds torque. Always check for leaks prior to system start-up.
- **Material Compatibility:** The LV10 level switch is available in two wetted material versions. The switch and the cable jacket are made of Polypropylene (PP) for the LV10-13_1. The switch is made of Polyvinylidene Fluoride (PVDF) and cable jacket is made of Fluorinated Ethylene Propylene (FEP) for the LV10-53_1. Make sure that the switch is compatible with the application liquids. To determine the chemical compatibility between the sensor and its application liquids, refer to the Compass Corrosion Guide, available from Compass Publications.
- **Temperature and Pressure:** The LV10 series switch is designed for use in application temperatures up to 80˚C, and for use at pressures up to 25 psi (2bar) @ 25 ˚C., derated @ 1.667 psi (.115 bar) per ˚C. above 25˚C.
- **Wiring and Electrical:** The supply voltage used for the LV10 switch should never exceed 120 volts AC @ 15 VA for the LV10-_3_1. For CE applications, the supply voltage for the LV10 switch should never exceed 30 VRMS and 42.4 Vpeak or 60 VDC. Electrical wiring of the switch should be performed in accordance with all applicable national, state, and local codes.
- **Flammable, Explosive and Hazardous Applications:** The LV10 series switch should not be used within flammable or explosive applications unless properly connected to a approved control device. In hazardous applications, use redundant measurement and control points, each having a different sensing technology. Refer to the National Electrical Code (NEC) for all applicable installation requirements in hazardous locations.

Warning

Avoid installing the LV10 in magnetized metal tanks. Doing so will activate the internal reed switch.

TOP WALL INSTALLATION

FLOWLINE's LV10 switch may be installed through the top wall of a tank. For Smart Trak (LM10 series) installations, remove the sensors thread and use the bayonet adapter to interface to the LM30 series Switch Car. For Switch Pak™ (LM45 series) installations, use the 3/4" thread as the interface.

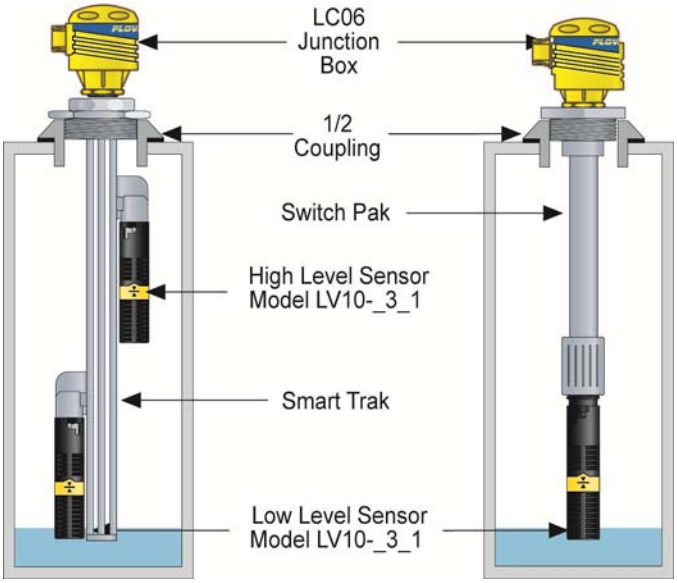

Bayonet Connection: The ¾" thread can be removed to access the bayonet connection. Simple press down on the threads and twist to release.

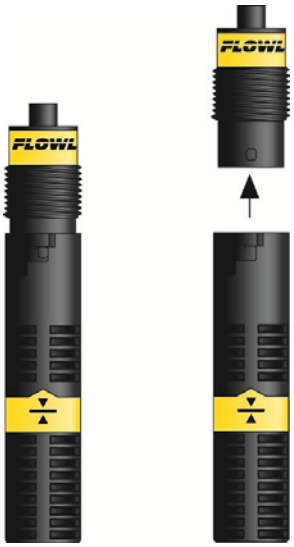

Orientation: Mounting orientation bust be kept vertical for proper orientation. The vertical buoyancy and float switches are orientated in vertical position ±20˚.



CONNECTION TO A SWITCH CAR KIT (LM30 SERIES)

In order to attach the LV10 series to a Smart Trak (LM10 series) fitting, a Switch Car Kit (LM30 series) is required. The LV10 series can be attached in two ways, without the bayonet adapter and with the bayonet adapter.

Without Bayonet Adapter

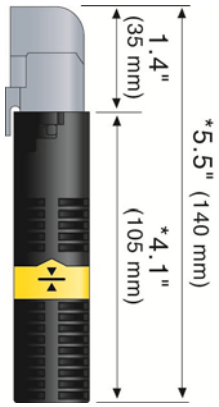

With Bayonet Adapter

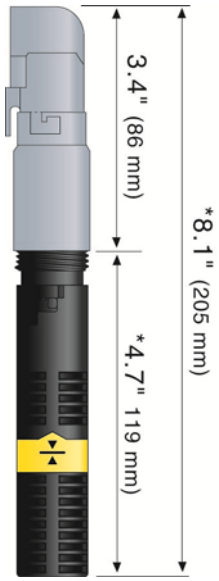

The use of the bayonet adapter will increase the overall length of the LV10/LM30 series assembly. This will result in a lower activation point within the tank due to the added length. It is recommended to remove the bayonet adapter when interfacing with Smart Trak.



First, remove the bayonet adapter by pressing down twisting the adapter.

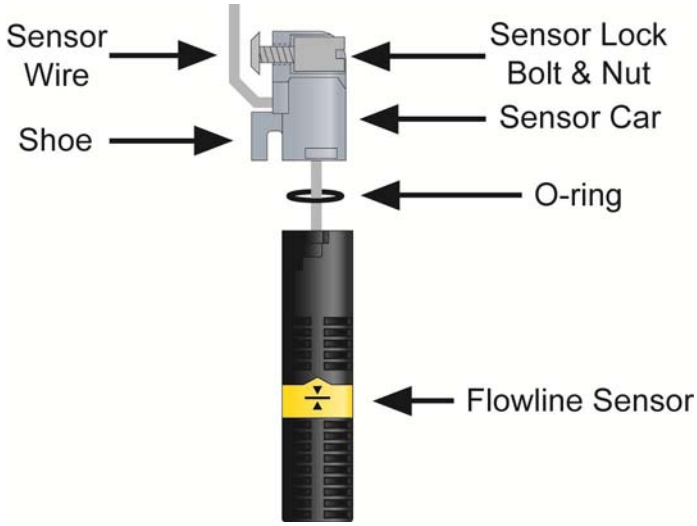

Next, thread the sensor wire through the O-ring and the sensor car and out through the hole between the sensor car shoe and the locking bolt. Set the O-ring into the LV10. Push the sensor into the bayonet side of sensor car. Screw the bayonet adapter onto the sensor until the sensor seats against the pit inside the adapter.

VOLTAGE

The input voltage to the LV10 switch should never exceed the maximum voltage rating. FLOWLINE controllers have a built-in 13.5 VDC power supply which provides power to all of FLOWLINE's level switches. Alternate controllers and power supplies may also be used with the LV10 switch.

CABLE LENGTH

Determine the length of cable required between the LV10 series sensor and its point of termination. Allow enough slack to ensure the easy installation, removal and/or maintenance of the sensor. The cable length may be extended up to a maximum of 1000 feet, using a well insulated, shielded wire.

WIRE STRIPPING

Using a 10 gauge wire stripper, carefully remove the outer layer of insulation from the last 1-1/4" of the sensor's cable. Unwrap and discard the exposed foil shield from around the signal wires, leaving the drain wire attached if desired. With a 20 gauge wire striper, remove the last 1/4" of the colored insulation from the signal wires.

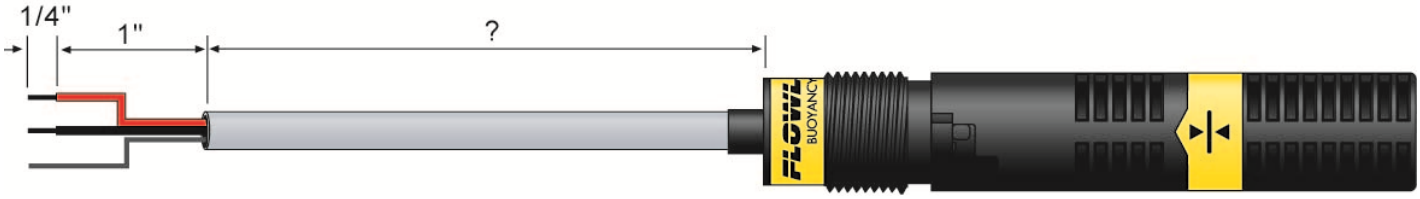

SMART TRAK AND SWITCH PAK ASSEMBLIES

The Vertical Buoyancy Level Switch can be packaged with Flowline Smart Trak or Switch Pak assembly.

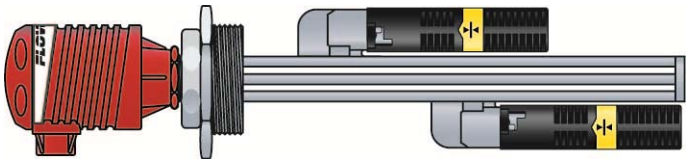

Smart Trak with Compact Relay Controller
AV23-4313, AV23-4323, AV23-4317 or AV23-4327
All models use (2) LV10-13_1 switches

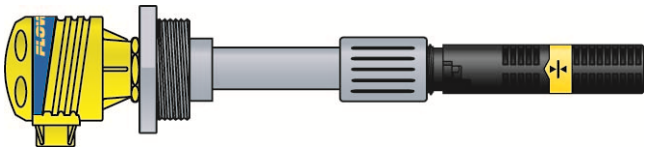

Switch-Pak with Compact Junction Box
AV16-4243, AV16-4247, AV16-5243 or AV16-5247
All models will use (1) LV10-_3_1 switch

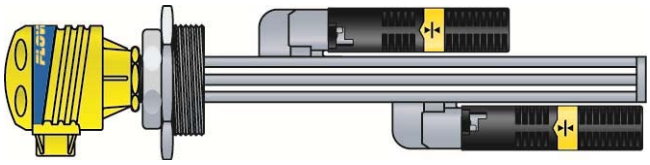

Smart Trak with Compact Relay Controller
AV16-4343/AV16-4347 – Uses (1) LV10-13_1
AV26-4343/AV26-4347 – Uses (2) LV10-13_1
AV36-4343/AV36-4347 – Uses (3) LV10-13_1
AV46-4343/AV46-4347 – Uses (4) LV10-13_1

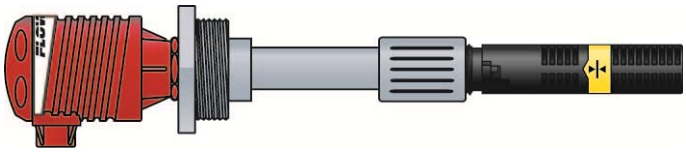

Switch-Pak with Compact Relay Controller
AV13-4213, AV13-4217, AV13-4223, AV13-4227,
AV13-5213, AV13-5217, AV13-5223 or AV13-5227
All models will use (1) LV10-_3_1 switch

WIRING TO A FLOWLINE CONTROLLER

LC40 Series Controller (LC42-1001 Shown)

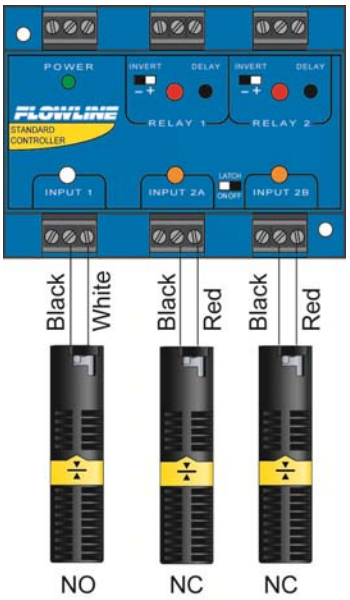

LC10/LC11 Series Controller (LC11-1001 Shown)

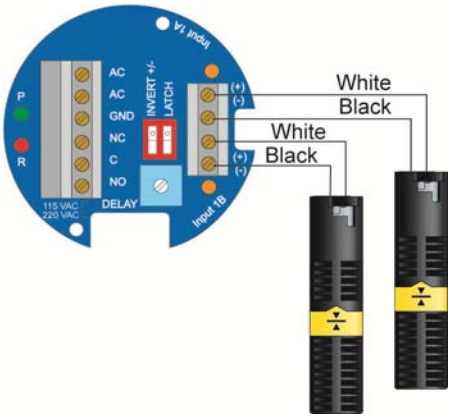

NOTE: When using a latching relay, the polarity of both switches must be the same. Either both switches are wired Normally Closed (Red & Black – See Relay #2 with LC42) or both Normally Open (White & Black – See Relay #1 with LC11).

VERTICAL BUOYANCY LEVEL SWITCH (LV10-_3_1)

The LV10-_3_1 switch can be wired normally open or normally closed for your application requires.

Normally Open

Use the Black and White wire for operation the LV10-_3_1 in a normally open state. Normally open is defined as the switch being open when the float is dry and closed when the float becomes submersed. This operation is typical for indicating a high level.

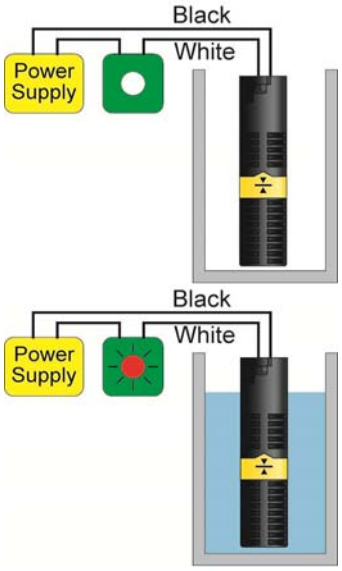

Normally Closed

Use the Black and Red wires for operating the LV10-_3_1 in a normally closed state. Normally closed is defined as the switch being closed when the float is dry and open when the float becomes submersed. This operation is typical for indicating a low level.

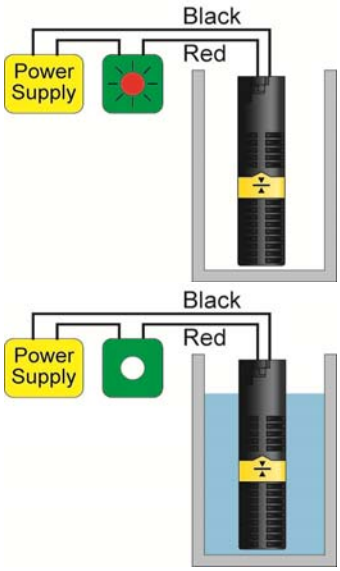

GENERAL

While a filter should protect the float from particulate contamination, the switch may need to be cleaned periodically to prevent jamming of sticking. The vertical buoyancy and vertical float has no scheduled maintenance requirement, except to clean off any deposits or scaling from the switch as necessary. It is the responsibility of the user to determine the appropriate maintenance schedule, based on the specific characteristics of the application liquid.

CLEANING PROCEDURE

1. **Power:** Make sure that all power to the switch, controller and/or power supply is completely disconnected.
2. **Switch removal:** If necessary, make sure that the tank is drained well below the switch prior to removal. Carefully, remove the sensor from the installation. Remove the outer screen by pushing on the screen and turning it slightly to disconnect it from the buoyancy net connector so that the float is exposed.
3. **Cleaning the switch:** using a soft bristle brush and mild detergent, carefully wash the switch. Do not use harsh abrasives such as steel wool or sandpaper, which might damage the surface of the sensor. Do not use incompatible solvents which may damage the sensor's PP or PVDF plastic body. Take particular care to remove any scaling from the float body and make sure that it moves freely.
4. **Sensor installation:** Follow the appropriate steps of installation as outlined in the Installation section of this manual.

TESTING THE INSTALLATION

1. **Power:** Turn on power to the controller and/or power supply.
2. **Immersing the switch:** Immerse the sensing tip in its application liquid, by filling the tank up to the switch. An alternative method of immersing the switch during preliminary testing is to hold a cup filled application liquid up to the switch's tip.
3. **Test:** With the switch being fluctuated between wet and dry states, the switch indicator light in the controller should turn on and off. If the controller doesn't have an input indicator,
    a. Use a voltmeter with a power supply in series to measure an open or closed circuit.
    b. Use an ohmmeter in series to measure an open or closed circuit.
4. **Point of actuation:** Observe the point at which the rising or falling fluid level causes the switch to change state, and adjust the installation of the switch if necessary.

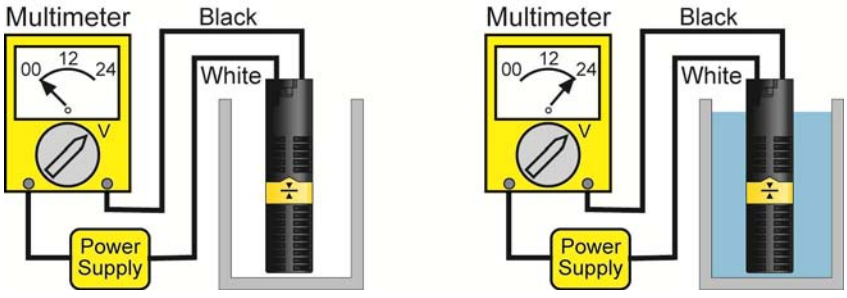

EXAMPLE

Testing the LV10 series with a Multimeter set to read Volts. When wired NO (Black and White), the meter will read 0 volts when dry and full voltage when wet.

WARRANTY

Flowline warrants to the original purchaser of its products that such products will be free from defects in material and workmanship under normal use and service in accordance with instructions furnished by Flowline for a period of two years from the date of manufacture of such products. Flowline's obligation under this warranty is solely and exclusively limited to the repair or replacement, at Flowline's option, of the products or components, which Flowline's examination determines to its satisfaction to be defective in material or workmanship within the warranty period. Flowline must be notified pursuant to the instructions below of any claim under this warranty within thirty (30) days of any claimed lack of conformity of the product. Any product repaired under this warranty will be warranted only for the remainder of the original warranty period. Any product provided as a replacement under this warranty will be warranted for the full two years from the date of manufacture.

RETURNS

Products cannot be returned to Flowline without Flowline's prior authorization. To return a product that is thought to be defective, go to flowline.com, and submit a customer return (MRA) request form and follow the instructions therein. All warranty and non-warranty product returns to Flowline must be shipped prepaid and insured. Flowline will not be responsible for any products lost or damaged in shipment.

LIMITATIONS

This warranty does not apply to products which: 1) are beyond the warranty period or are products for which the original purchaser does not follow the warranty procedures outlined above; 2) have been subjected to electrical, mechanical or chemical damage due to improper, accidental or negligent use; 3) have been modified or altered; 4) anyone other than service personnel authorized by Flowline have attempted to repair; 5) have been involved in accidents or natural disasters; or 6) are damaged during return shipment to Flowline. Flowline reserves the right to unilaterally waive this warranty and dispose of any product returned to Flowline where: 1) there is evidence of a potentially hazardous material present with the product; or 2) the product has remained unclaimed at Flowline for more than 30 days after Flowline has dutifully requested disposition. This warranty contains the sole express warranty made by Flowline in connection with its products. ALL IMPLIED WARRANTIES, INCLUDING WITHOUT LIMITATION, THE WARRANTIES OF MERCHANTABILITY AND FITNESS FOR A PARTICULAR PURPOSE, ARE EXPRESSLY DISCLAIMED. The remedies of repair or replacement as stated above are the exclusive remedies for the breach of this warranty. IN NO EVENT SHALL FLOWLINE BE LIABLE FOR ANY INCIDENTAL OR CONSEQUENTIAL DAMAGES OF ANY KIND INCLUDING PERSONAL OR REAL PROPERTY OR FOR INJURY TO ANY PERSON. THIS WARRANTY CONSTITUTES THE FINAL, COMPLETE AND EXCLUSIVE STATEMENT OF WARRANTY TERMS AND NO PERSON IS AUTHORIZED TO MAKE ANY OTHER WARRANTIES OR REPRESENTATIONS ON BEHALF OF FLOWLINE. This warranty will be interpreted pursuant to the laws of the State of California. If any portion of this warranty is held to be invalid or unenforceable for any reason, such finding will not invalidate any other provision of this warranty.

For complete product documentation, video training, and technical support, go to flowline.com.
For phone support, call 562-598-3015 from 8am to 5pm PST, Mon - Fri.
(Please make sure you have the Part and Serial number available.)