Magnet drive rotary vane pumps
TM 300-400 series

Find out more

The TM 300-400 series pumps have been designed to deliver a smooth flow reliably for a long time.
The precise alignment of pump and motor, combined with the absence of contact between them granted by the magnetic drive, optimizes the operation of the unit reducing friction and therefore wear, noise and power consumption.
The absence of dynamic seals in favour of static o-rings improves the reliability of the pump and at the same time of the motor driving it.
The pump, with stainless steel housing and rotor, carbon graphite pumping chamber and NBR seals, is NSF certified for use in contact with potable water.

Available upon request:

- Viton®/EPDM seals



MAIN APPLICATIONS

- Cooling systems
- Booster systems
- Water treatment
- Solar systems

TECHNICAL INFORMATION

Pump housing material	Stainless steel	Speed limit	1725 rpm
Pumping chamber	Carbon graphite	Max static pressure	20 bar/290 psi
Ports	3/8" GAS or NPT	Pump weight	1.0 kg (2.2 lb)

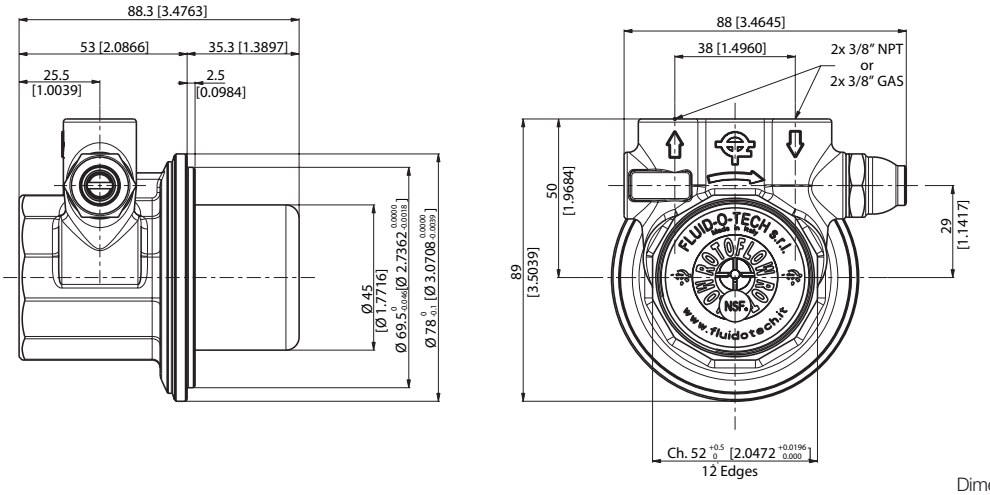

Dimensions in mm [inches]

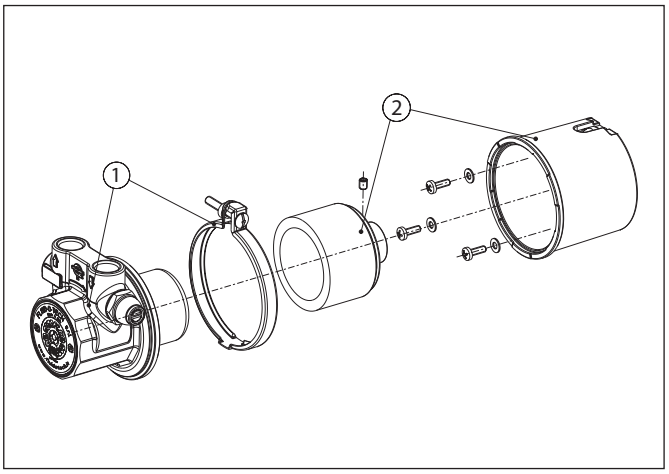

POS	DESCRIPTION	CODE
1	TM 300-400 series pump	
2	High torque mounting assembly (M56-B14)	TMBS56C
	High torque mounting assembly (M63-B14)	TMBS63C
	High torque mounting assembly (NEMA 56C)	TMBS5BC

MODEL	RELIEF VALVE	FIGURE
TMSS300	NO	1
TMSS400		2
TMSS301	STANDARD	1
TMSS401		2
TMSS304	BALANCED	1
TMSS404		2

Note: The "C" series driving magnets provide a slot in the internal bore to accept the driving key of M56, M63 and NEMA 56C frame motors.

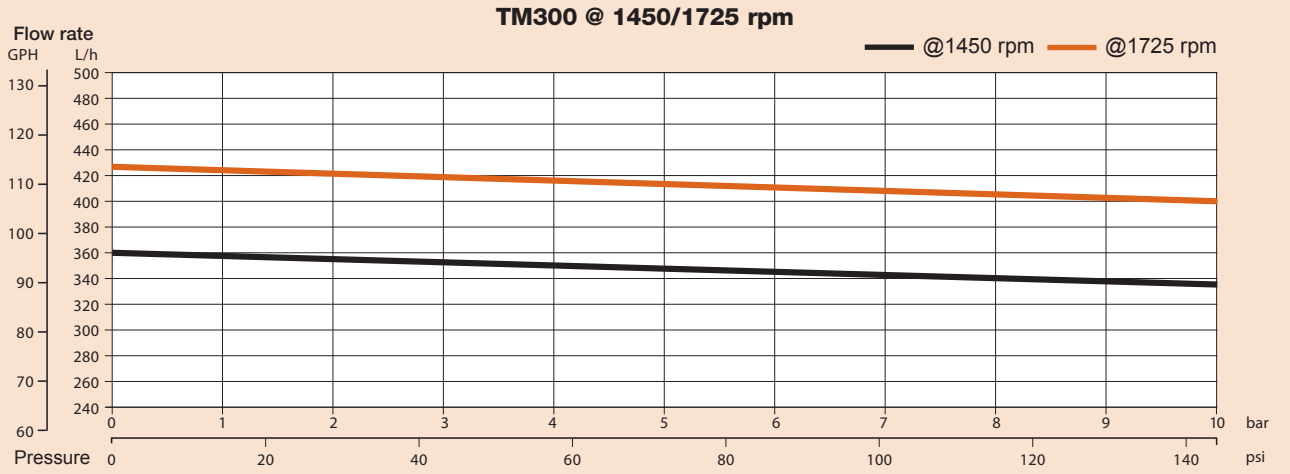

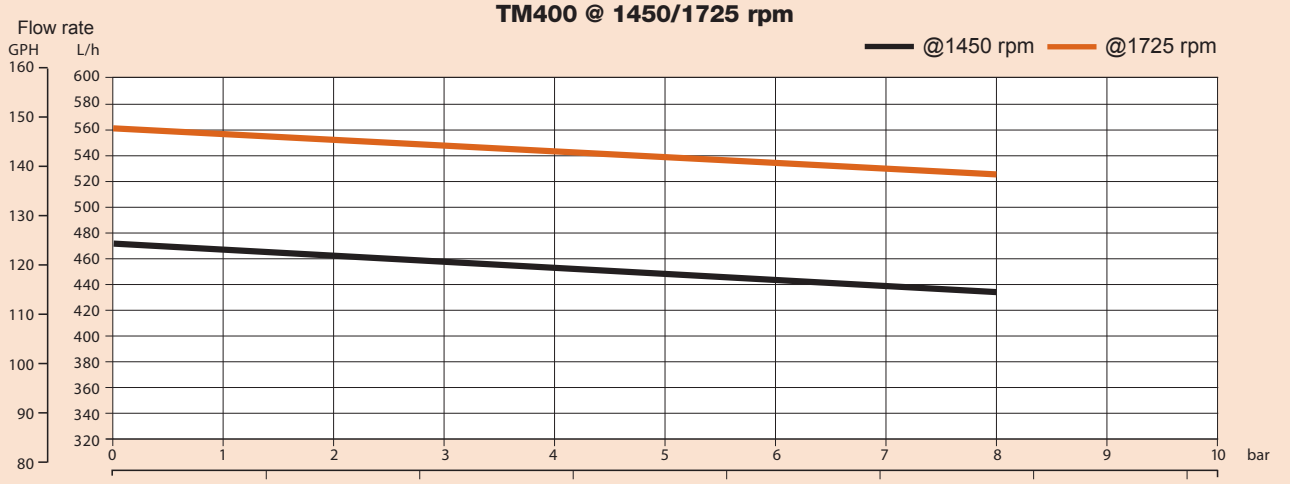

Fluid-o-Tech reserves the right to alter the specifications indicated in this catalogue at any time and without prior notice.

Fluid-o-Tech srl
Via Leonardo da Vinci, 40
20094 Corsico, Milano, Italy
Tel. +39 02 9995 01
Fax +39 02 9995 0999
info@fluidotech.it

Fluid-o-Tech Int'l Inc.
161 Atwater St.,
06479 Plantsville CT (USA)
Tel. +1 (860) 276 9270
Fax +1 (860) 620 0193
info@fluid-o-tech.com

Fluid-o-Tech Int'l Inc. Japan
203, 2-17-19, Ebara, Shinagawa
Tokyo 142-0063, Japan
Tel. +81 (0) (3) 3783 9660
Fax +81 (0) (3) 3783 9661
k.kato@fluidotech.com

Fluid-o-Tech Asia (Beijing) Co., Ltd
Jingwei Industrial Zone,
Beifang Huairou, Beijing, 101400, PRC
Tel. +86 (0) (10) 6168 4650
Fax +86 (0) (10) 6168 4651
info@fluidotech-asia.com