Bulletin
PP-632C
May 2015

PACER SELF-PRIMING 'T' PUMPS

SOFT SOLIDS HANDLING CENTRIFUGAL PUMPS



- Available with gasoline engines, long-coupled to electric motor or pedestal mounted.
- Corrosion resistant materials. Tough fiberglass reinforced polyester casing, urethane coated impeller and volute, Buna-N wearplate with steel core, Buna-N check valve and elastomers and stainless steel fasteners.
- Suction lift to 25 feet vertical.
- Flows to 360 GPM or 78 feet TDH.
- Oil lubricated silicon carbide shaft seal.
- Built-in check valve and double flush volute.
- 2" or 3" NPT ports.

T Pumps are self-priming, **soft** solids handling centrifugal pumps that will pass a solid 1/2 the diameter of the suction port. These pumps are constructed of tough non-metallic corrosion and abrasion resistant materials for general service with water and salt water. Designed for performance, T Pumps provide fast, high suction lifts and high flow rates, ideal for de-watering and transferring out of a sump, pit, tank, pond, river and aquamarine applications. Pressurized oil lubrication system silicon carbide shaft seal faces and the open impeller and double flush volute will help keep the pump free of settled solids. T Pumps come close-coupled to powerful gasoline engines mounted on rubber feet with roll cage for 3" models and carry bar for 2" models; or pedestal mounted for long coupling to TEFC electric motors or for flexible coupling to the users power source.



FISH PONDS



HYDRO SEEDING



FLOODED EXCAVATIONS



MANY TYPES OF SALTWATER APPLICATIONS



LIQUID MANURE

SELF-PRIMING 'T' PUMP *Specifications*

'T' PUMPS WITH GASOLINE ENGINE DRIVER OR PEDESTAL MOUNTED

Pumps are constructed with tough fiberglass reinforced polyester casing; urethane coated steel impeller and volute with Buna-N coated wearplate, Buna elastomers and stainless steel fasteners. This pump features pressurized oil lubricated silicon carbide single mechanical shaft seal and quick release stainless steel casing clamp. Close-coupled to heavy duty industrial-commercial engines, suction hose strainer, roll cage on the 3" model and carry bar on the 2" model. Pedestal mounted unit coupled to cast iron bearing pedestal with stainless steel pump shaft for flexible coupling to electric motor or other power source.

FLOW CURVE LETTER	PORT SIZE (IN.)	MAX. FLOW 3800 RPM		MAX. TDH 3800 RPM		SHIP WT (LBS.)	MODEL NUMBER	PRICE CODE NO.	POWERED BY:
		GPM	LPM	FT.	m				
GASOLINE/DIESEL DRIVEN									**ENGINE**
Q	2	240	900	83	25.3	90	TE2QBB E6VC K	58-72Q8 E6VC K	B&S 6.5 HP Vanguard***
Q	2	240	900	83	25.3	90	TE2QBB E5HC K	58-72Q8 E5HC K	Honda 5.5 HP GX 160***
T	3	360	1360	78	24.4	135	TE3TBB E8VC K	58-73T8 E8VC K	B&S 8 HP Vanguard***
T	3	360	1360	78	24.4	135	TE3TBB E8HC K	58-73T8 E8HC K	Honda 8 HP GX***
PEDESTAL MOUNTED (See bulletin PP-633 for components required for long coupling to electric motors.)									**REQ'D HP/RPM**
B	2	120*	450*	28	8.5	65	TE2BBB CSS	58-72B8 P	.61 / 1750
D	3	180*	680*	23	7	76	TE3DBB CTSS	58-73D8 P3	.9 / 1750
K	2	240**	900 **	88	26.8	65	TE2KBB CSS	58-72K8 P	4.0 / 3450
M	3	380**	1440**	73	22.3	76	TE3MBB CTSS	58-73M8 P3	6.0 / 3450

* GPM at 1750 RPM with required HP.
** GPM at 3450 RPM with required HP.
*** Honda and Briggs & Stratton gasoline engines listed here carry a 3 year commercial warranty through the engine manufacturer.

FLOW CURVES

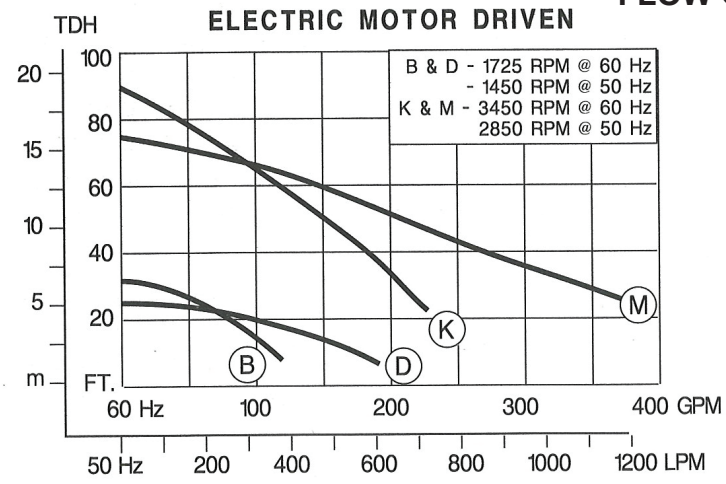

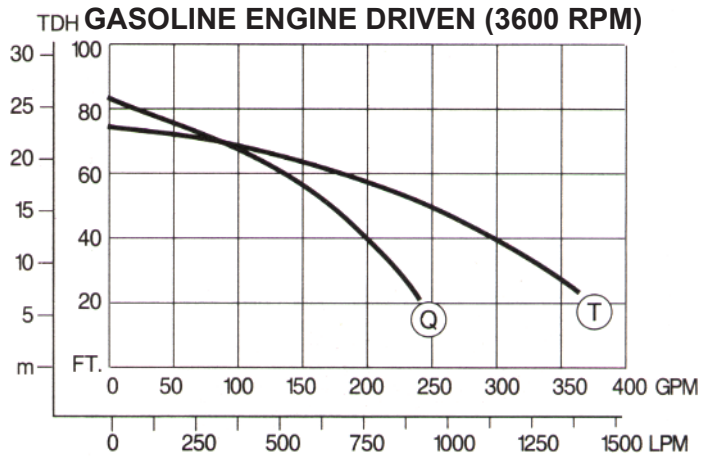

PACER® PUMPS
41 Industrial Circle
Lancaster PA 17601-5927
www.pacerpumps.com
800-233-3861
717-656-2161
Fax: 717-656-0477
Email: sales@pacerpumps.com

BULLETIN
PP-627D
May 2015

SELF-PRIMING 'T' PUMPS

EXCELLENT FOR PUMPING SOFT SOLIDS, DIRTY WATER, SALT WATER AND MANY OTHER EFFLUENTS AROUND THE FARM, ON THE WATER OR AT THE JOB SITE.



PUMP:

- Pump is constructed of corrosion resistant polyester with urethane coated impeller and volute.
- Buna-N elastomers and wearplate.
- Stainless steel fasteners and quick-release band clamp for easy clean out.
- Available in 2" or 3" for maximum flows.
- Self-priming with vertical suction lift to 25 feet.
- Rough service oil lubricated silicon carbide shaft seal.
- Includes 2" or 3" zinc coated suction strainer.

ENGINE:

- 2" pump is available with Briggs & Stratton 6.5 HP Vanguard (Commercial Power) engine with 3 year engine warranty, or Honda GX 160 Series OHV Commercial Series
- 3" pump is available with either Briggs & Stratton 8HP Vanguard or Honda 8 HP GX 240 OHV Commercial Series.

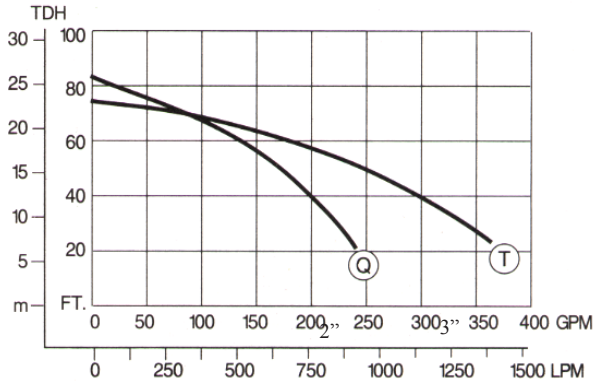

PUMP SPECIFICATIONS

CURVE	MODEL	ENGINE	PORT SIZE	MAX. FLOW	MAX. TDH	WT.
Q	TE2QBB E6VC K TE2QBB E5HC K	6.5HP B&S Vanguard Honda GX 160	2"	240 GPM	83' (36 psi)	85 lbs 85 lbs
T	TE3TBB E8VC K TE3TBB E8HC K	8 HP B&S Vanguard 8 HP Honda GX 240	3"	360 GPM	78' (33 psi)	116 lbs 120 lbs

PACER® PUMPS
41 Industrial Circle
Lancaster PA 17601-5927
www.pacerpumps.com
800-233-3861
717-925-8240
Fax: 717-656-0477
Email: sales@pacerpumps.com

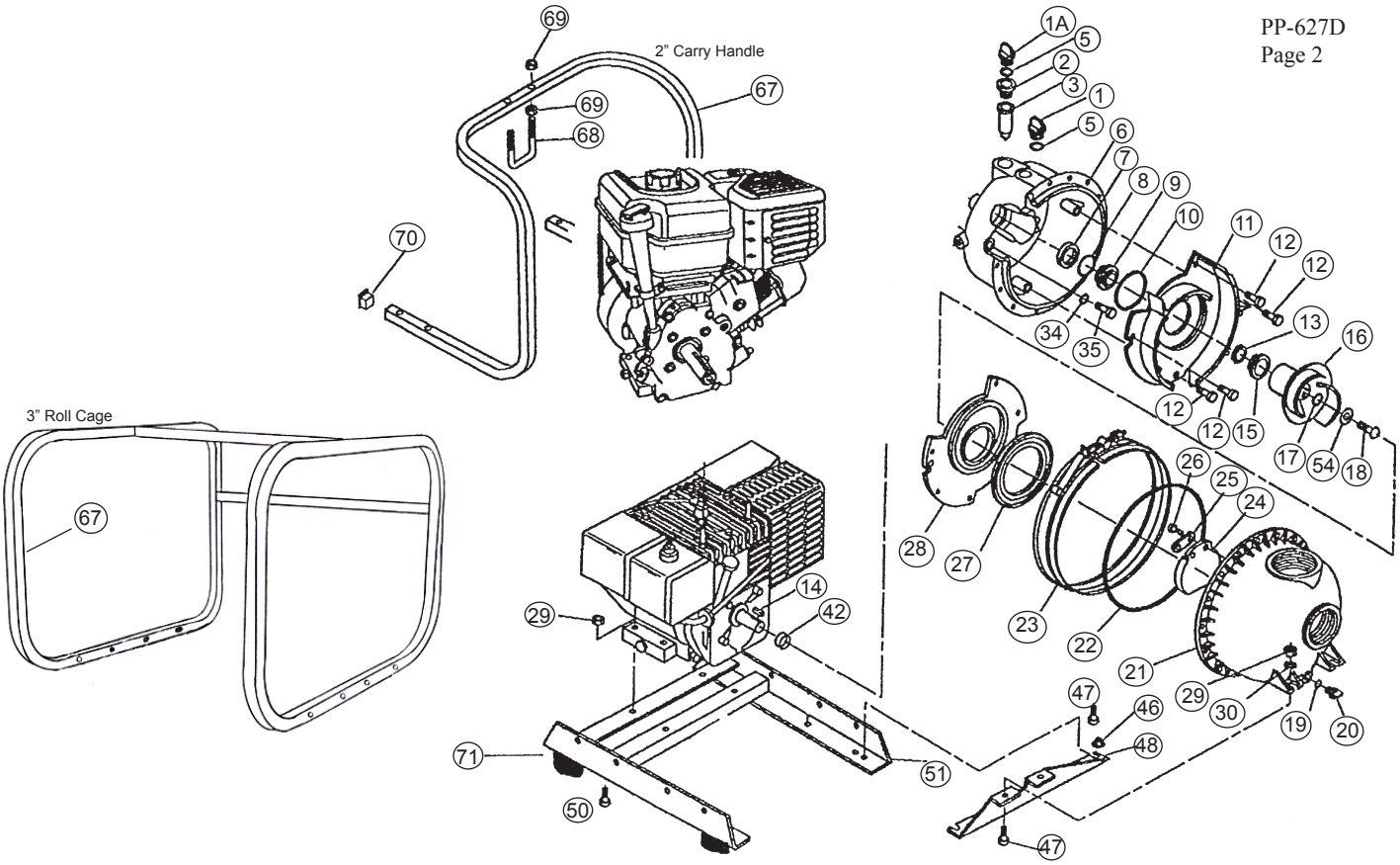

PARTS LIST FOR MODEL NO. TE2QBB and TE3TBB

Ref. No.	DESCRIPTION	QTY/PUMP	TE2QBB	TE3TBB
1	Filler plug, polyester	1	P-58-0722 30B	P-58-0722 30B
1A	Oil lube filler plug	1	P-58-0722 30B	P-58-0722 30B
2	Retainer, lube tube	1	P-58-46294 30	P-58-46294 30
3	Lubrication tube, Buna	1	P-58-46215 71	P-58-46215 71
5	O-ring, filler plug	2	P-58-0765 71	P-58-0765 71
6	Bracket assy. (includes 1,1A,2,3,5,6,7,8,9)	1	P-58-46218 31B	P-58-46208 31B
7	Oil lip seal	1	P-58-46314 11	P-58-46313 11
8,9 & 15	Shaft seal assy. stainless steel siliconized graphite, Buna-N	1	P-58-46250 11	P-58-46251 11
10	O-ring, volute	1	P-58-1203 71	P-58-46292 71
11	Volute, urethane coated with steel core	1	P-58-46224 80	P-58-46204 80
12	Volute screw, 1/4"-20 x 1", stainless steel	as required	P-58-46269 10	P-58-46269 10
13	Shim, impeller, .006"	as required	P-58-0778 11	--
	Shim, impeller, .015"	as required	P-58-0778 12	P-58-46338 10
	Shim, impeller. .030"	as required	P-58-0778 13	--
14	Key, steel	1	P-58-46339	P-58-46278
16	Impeller, urethane coated with steel core	1	P-58-46229 80	P-58-46214 80
	*Optional impeller, Polymar 656, solid molded (non-metallic) optional		P-58-46229 90	
17	O-ring for impeller screw,	1	P-58-46291 71	P-58-46290 71
18	Screw, impeller, stainless steel	1	P-58-0715 10	P-58-46309 10
19	O-ring, drain plug, Buna-N	1	P-58-1009 71	P-58-1009 71
20	Drain plug, polyester	1	P-58-0723 30	P-58-0723 30
21	Body assy. (includes 19,20,24,25,26,27)	1	P-58-46252 31B	P-58-46207 31B
22	O-ring, body, Buna-N	1	P-58-46304 71	P-58-46304 71
23	Clamp, V-band, stainless steel	1	P-58-46305 10	P-58-46305 10
24	Check valve, Buna-N	1	P-58-46217 71	P-58-46217 71
25	Retainer, check valve, polyester	1	P-58-46344 30	P-58-46344 30
26	Screw, check valve retainer	2	P-58-1348 10	P-58-1348 10
27	Suction gasket, Buna-N	1	P-58-46206 71	P-58-46206 71
28	Wearplate, Buna-N coated with steel core	1	P-58-46225 91	P-58-46205 91
29	Kepnut, 5/16"-18, plated steel	as required	P-58-0745	P-58-0745
30	Flat washer, 5/16" plated steel	as required	P-58-0730	P-58-0730
34	O-ring, bracket screw, Buna-N	4	P-58-0717 71	P-58-0717 71
35	Bracket screw, stainless steel	4	P-58-0715 10	P-58-46308 10
	Bracket Screw (for diesel engine only)	4	P-58-0715 10L	--
42	Slinger	1	P-58-46219 10	P-58-46266 71
46	Nut, flange, 5/16"-18 plated steel	2	P-58-46280	P-58-46280
47	Screw, 5/16"-18 x 1", plated steel	as required	P-58-0729	P-58-0729
48	Support, front housing	1	P-58-46306	P-58-46365
50	Screw, 5/16"-18 x 1 1/2, plated steel	as required	P-58-2167	P-58-2167
51	Chassis	1	P-58-46310	P-58-46379
54	Washer, impeller screw, rubber coated	1	P-58-46341	--
65	Suction strainer	1	P-58-46286	P-58-46287
67	Carry handle or roll cage	1	P-58-2035	P-58-46254
68	U-bolt, plated steel	1	P-58-2036	--
69	Hex nut, 3/8"-16, plated steel	4	P-58-2037	--
70	Finishing cap	2	P-58-0726 90	--
71	Rubber feet kit	1	P-58-0727 90	P-58-46378 90