CALL TOLL FREE 877-742-2878 FOR SALES AND SUPPORT
Return to BurtProcess.com

Vortex VT22

Turbine Grinder

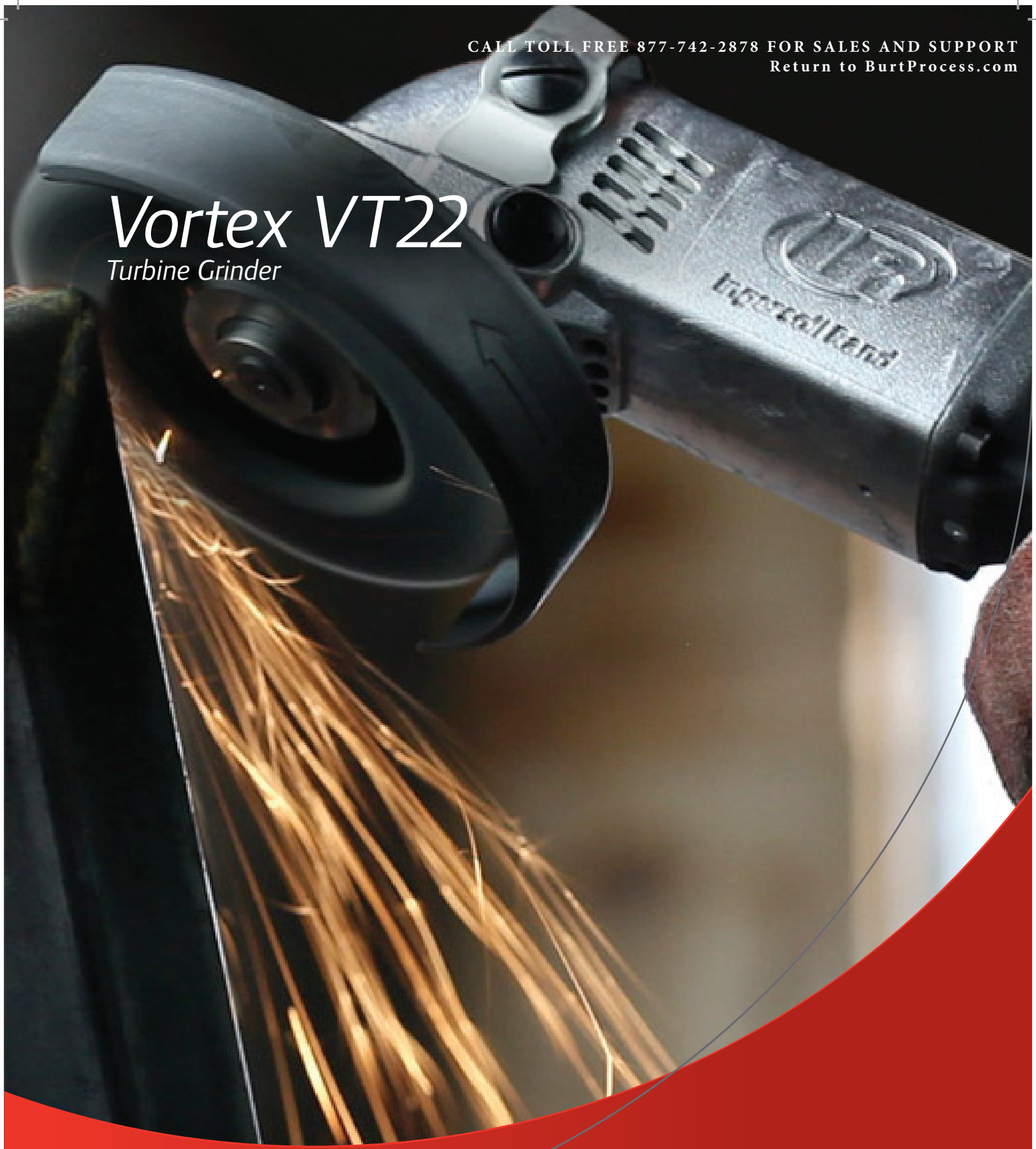

Ingersoll Rand

VORTEX

VT22 Turbine Grinder

MORE MATERIAL REMOVAL, GREATER CUTTING DEPTH, LESS EFFORT! Introducing the new Ingersoll Rand 3.0 HP twin-stage 5" turbine grinder. Our new VT22 Turbine Grinder offers a speed governor that maintains the most efficient speed while under load. A spindle offset of only .89" allows greater use of the grinding wheel and a cutting depth of up to 1.6". New productivity features include a single, push button spindle lock that provides dual usage for easy wheel changes and guard adjustments, plus an optional top handle for easy access in tight spaces.

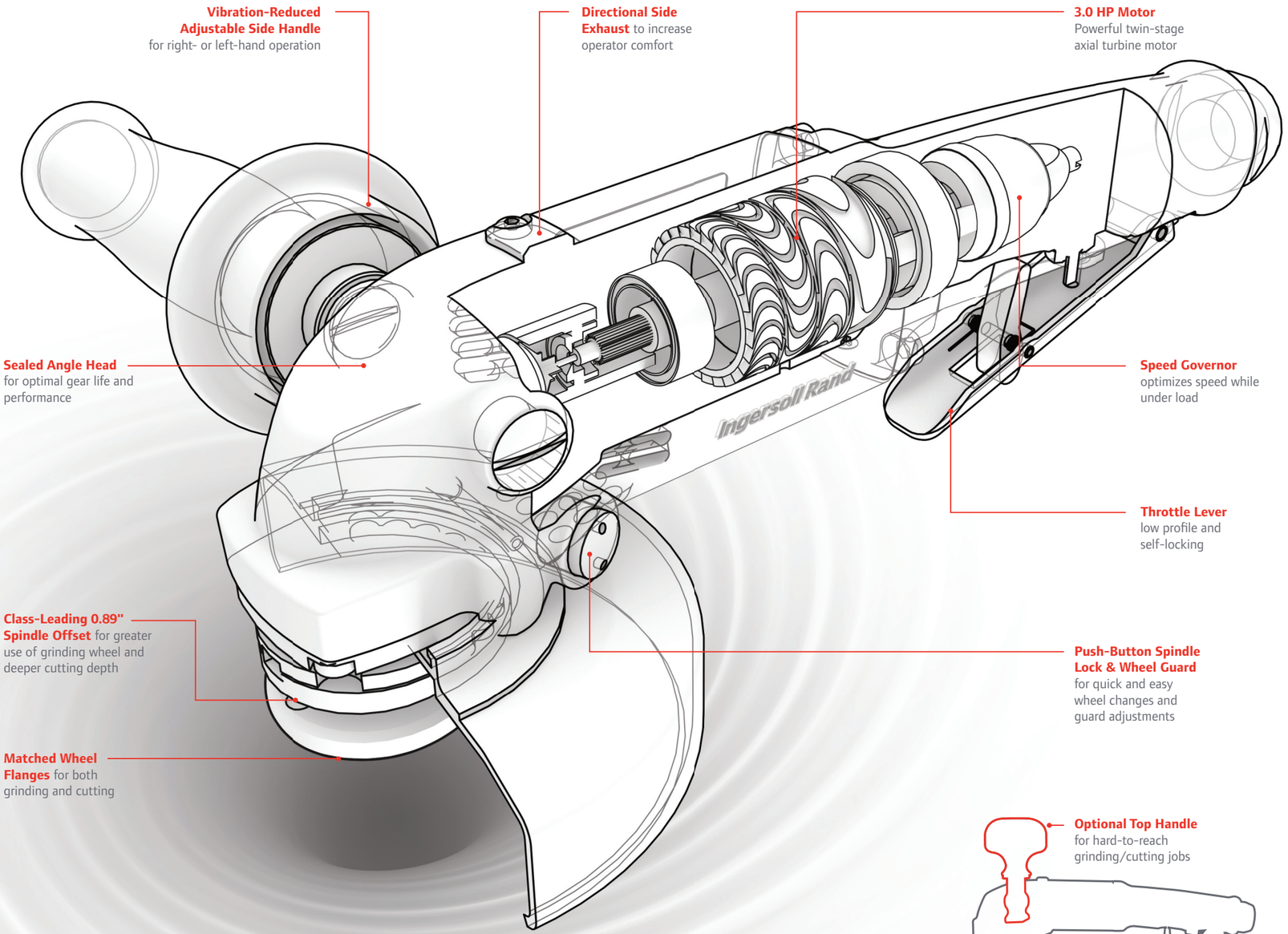

Vibration-Reduced Adjustable Side Handle for right- or left-hand operation

Directional Side Exhaust to increase operator comfort

3.0 HP Motor Powerful twin-stage axial turbine motor

Sealed Angle Head for optimal gear life and performance

Speed Governor optimizes speed while under load

Throttle Lever low profile and self-locking

Class-Leading 0.89" Spindle Offset for greater use of grinding wheel and deeper cutting depth

Push-Button Spindle Lock & Wheel Guard for quick and easy wheel changes and guard adjustments

Matched Wheel Flanges for both grinding and cutting

Optional Top Handle for hard-to-reach grinding/cutting jobs

Specifications		
	US Standard	**Metric**
Part number	VT22-120P105	VT22-120P95M
Rated power	3.0 HP	2.2 kW
Free speed	12,000 rpm	12,000 rpm
Wheel size	5 in	125 mm
Maximum wheel thickness	¼ in	6 mm
Maximum cutting depth	1.6 in	40 mm
Wheel type	Type 27, Type 1	Type 27, Type 1
Arbor/spindle thread	5/8 in – 11 in	M14
Air Requirements		
Air consumption @ free speed	27 CFM	12.7 L/s
Air consumption at load	84 CFM	39.6 L/s
Noise & Vibration		
Sound pressure/power (ISO15744)	86.4/97.4 dB(A)	86.4/97.4 dB(A)
Vibration level/measurement uncertainty (ISO28927)	5.7/ 2.1 m/s²	5.7/ 2.1 m/s²
Weights & Dimensions		
Tool weight	4.6 lb	2.1 kg
Tool length	11.6 in	295 mm
Tool height	3.5 in	88.9 mm
Shipping weight	6.4 lb	2.9 kg

Performance figures are at 90 psi (6.2 bar)
Air inlet size: ½" NPTF and BSP
Recommended hose size: ½" (13mm)

www.ingersollrandproducts.com/vortex

Ingersoll Rand
Industrial Technologies

Ingersoll Rand
Industrial Technologies

Ingersoll Rand Industrial Technologies provides products, services and solutions that enhance our customers' energy efficiency, productivity and operations. Our diverse and innovative products range from complete compressed air systems, tools and pumps to material and fluid handling systems. We also enhance productivity through solutions created by Club Car®, the global leader in golf and utility vehicles for businesses and individuals.

(800) 866-5457
www.ingersollrandproducts.com

Distributed by:

Nothing contained on these pages is intended to extend any warranty or representation, expressed or implied, regarding the product described herein. Any such warranties or other terms and conditions of sale of product shall be in accordance with Ingersoll Rand's standard terms and conditions of sale for such products, which are available upon request.

Product improvement is a continuing goal at Ingersoll Rand. Designs and specifications are subject to change without notice or obligation.

© 2011 Ingersoll-Rand Company — IRITS-0611-031