PLAST-O-MATIC

PRODUCT DATA

"PRA" & "PRAM" SPRING-FREE SERIES AIR-LOADED PRESSURE REGULATORS

DESIGN ELIMINATES SPRING CORROSION PROBLEMS
PERFORMANCE RIVALS CONTROL VALVES, AT LOWER COST



FEATURES:

- Inlet pressures to 150 PSI.
- Downstream settings from 5 to 125 PSI.
- Outperforms spring-loaded regulators through improved response to pressure changes; pressure is maintained without sacrificing flow.
- Ideal for applications requiring frequent adjustment or remote control.
- Multi-million cycle design.
- Dual rolling diaphragms provide exceptional sensitivity.
- One piece body and double u-cup design prevent leakage and eliminate "creep".
- Patented Fail Dry Safety Vents warn of seal failure; permits valve to continue operating and prevents liquid/air contamination.
- Can be used to control any flow related parameter via sensors and E/P converter (see reverse side).

MATERIALS OF CONSTRUCTION AND PIPING CONNECTIONS:

Standard connections are female NPT threaded ports. Socket, flanged, BSP, JIS, flare and spigot connections are also available. Standard body materials are Grade 1 Type 1 PVC, Natural Polypropylene, and Kynar® PVDF. Standard seal materials are Viton and EPDM. Some Kynar PVDF components are used in the Natural Polypropylene models for strength. External fasteners are stainless steel; can be recessed or capped. For materials other than listed, please consult factory.

PRESSURE RATINGS

Size	Max. Inlet	Min. Set	Max. Set
1/4"	150	15	125
1/2"	150	10	125
3/4" - 3	150	5	125

DESIGN:

Plast-O-Matic Series PRA/PRAM (molded body) Pressure Regulators are designed to handle corrosive and ultra-pure liquids with inlet pressures up to 150 PSI at 75°F. Standard downstream set pressure range is 5 to 125 PSI. The normally-open regulators incorporate a poppet seat at the valve orifice to prevent sticking and affecting the sensing of the downstream line pressure. Also, one piece body construction and dual U-cup shaft seals help to eliminate internal leakage that could cause the downstream pressure to creep beyond the set pressure. Two, large-surface, rolling diaphragm seals isolate the air chamber from downstream pressure sensing liquid. This unique design, in conjunction with a pressure balanced shaft, assures smooth performance and stable control. ***CAUTION:*** Avoid quick closing valves down-stream of a regulator to eliminate "water hammer" shock that can cause breakage.

1384 Pompton Avenue, Cedar Grove, NJ 07009 USA (973) 256-3000 • Fax (973) 256-4745 • www.plastomatic.com

SERIES PRA & PRAM AIR LOADED PRESSURE REGULATOR

OPERATION:

A relieving type air regulator is required to load the sensing port; see diagram. Series PRA/M pressure regulators prevent downstream pressure from exceeding the desired set pressure. Regulator will remain closed as long as set pressure is maintained. As equipment or valves down-stream of the regulator begin to open and demand flow, the downstream pressure begins to fall and the regulator begins to open. As valves or equipment downstream open further, the pressure regulator continues to open until its maximum opening is reached. As the process is reversed, downstream pressure begins to increase and the regulator starts closing. When the downstream pressure again reaches set pressure the regulator closes bubble-tight.

NOTE: *The PRA/M prevents downstream pressure from exceeding the set point. To "maintain" a specific downstream pressure, the PRA/M requires an additional control, such as the PRS Stabilizer (Patent Pending) - see below.*

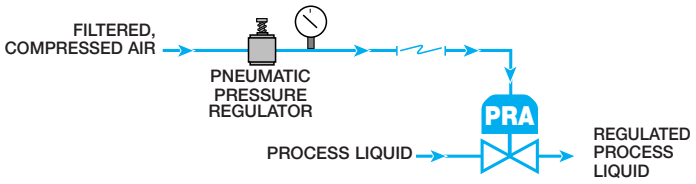

REGULATOR PERFORMANCE CURVES

Typical Performance Of 1" Regulators
Flow Capacity (gpm) vs. Pressure Drop-Off (psi)
Comparison of Representative Plast-O-Matic Models with Competitors "A", "B", "C"

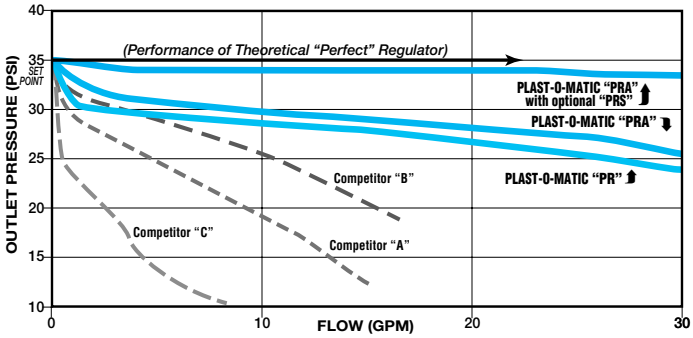

Drop-off is the difference between the pressure regulator set pressure and the downstream pressure. Performance curves chart, above, identifies the high flow capacities and the low pressure drop-off of Plast-O-Matic regulators which result in their greater sensitivity, finer adjustability and superior accuracy as compared to competitive models.

NOTE: Refer to Catalog PR for information on Plast-O-Matic Spring-Loaded Pressure Regulator Models.

DIMENSIONS:

PIPE SIZE	A		B		C		D	
	in.	mm.	in.	mm.	in.	mm.	in.	mm.
1/4"	2.0	51	4.062	103	2.625	67	1.437	40
1/2"	2.5	64	6.187	157	4.187	106	2.000	51
3/4"	5.5	140	8.1	207	5.8	146	2.4	60
1"	5.5	140	8.1	207	5.8	146	2.4	60
11/2"	6.1	155	9.9	253	6.9	177	3.0	76
2"	6.6	167	9.9	253	6.9	177	3.0	76
3"	8.0	203	15.062	378	8.625	220	6.437	168

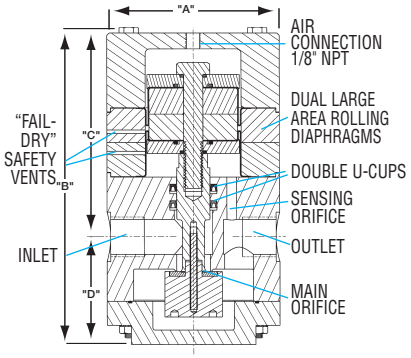

SERIES PRA/M MODEL NUMBERS

MAXIMUM FLOW RATES

Valve Size	EPDM Seals Model No.	Viton Seals Model No.	Flow Rates GPM*
1/4"	PRA025EP	PRA025V	5
1/2"	PRA050EP	PRA050V	10
3/4"	PRAM075EP	PRAM075V	35
1"	PRAM100EP	PRAM100V	50
11/2"	PRAM150EP	PRAM150V	70
2"	PRAM200EP	PRAM200V	100
3"	PRA300EP	PRA300V	200

*Maximum Recommended

Add material suffix to complete the part number. Add -PV for PVC,-PP for Polypropylene, and - PF for Kynar PVDF.

ADDITIONAL USES & ACCESSORIES



Series PRA shown with optional PRS (Patent Pending)

CONTROLLING PRESSURE AND OTHER FLOW RELATED PARAMETERS:

Plast-O-Matic offers a performance en-hancing accessory, Series PRS (Patent Pending,) which loads the PRA/M with greater accuracy by reacting to actual downstream pressure. Notice on the performance graph, above, how this combination approaches theoretical perfection.

To use Series PRA/M to control other flow related parameters, such as flow rate, pH, viscosity, temperature, etc., a transducer, controller, and E/P or I/P converter is required.

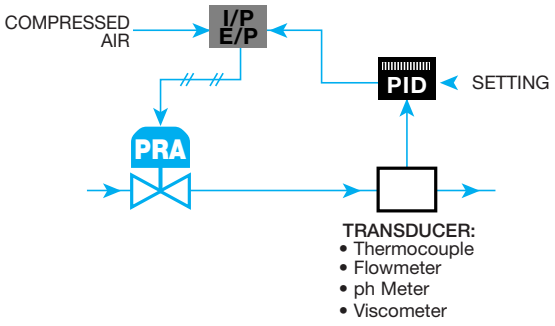

1384 Pompton Avenue, Cedar Grove, NJ 07009 USA (973) 256-3000 • Fax (973) 256-4745 • www.plastomatic.com