CALL TOLL FREE 877-742-2878 FOR SALES AND SUPPORT

Return to BurtProcess.com

albin pump
since 1928

ALBIN PUMP ALX

Hose Pump / Instruction Manual

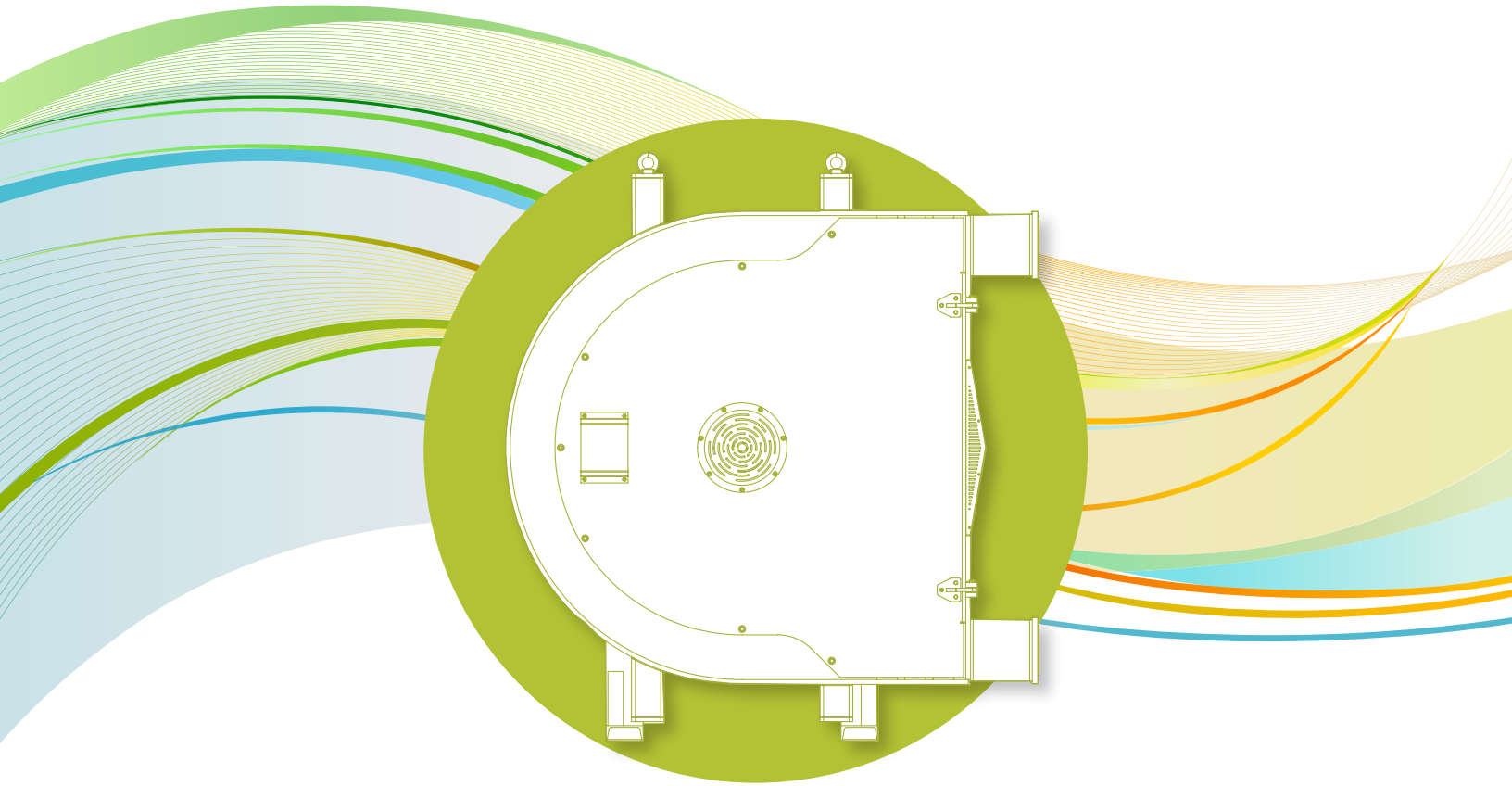

Ingersoll Rand

ALX

Table of Contents

1 I HOW TO USE THIS MAINTENANCE MANUAL . . . 3
2 I PUMP USE AND TRAINING . . . 3
2.1 - Use of the pump . . . 3
2.2 - Responsibility . . . 3
2.3 - Training and instructions . . . 3
3 I DESCRIPTION . . . 4
3.1 - Product identification . . . 4
3.2 - Operation principle . . . 4
3.3 - Pump construction . . . 5
3.4 - Pump hose . . . 6
3.5 - Pump gearbox . . . 6
3.6 - Electrical motor . . . 6
3.7 - Available Options . . . 6
4 I INSTALLATION . . . 7
4.1 - Unpacking and control . . . 7
4.2 - Conditions of installation . . . 7
4.3 - Setup . . . 7
4.4 - Piping . . . 7
4.5 - Pump lifting . . . 8
5 I PUMP START-UP . . . 8
5.1 - Preparations . . . 8
5.2 - Pump start-up . . . 8
6 I MAINTENANCE . . . 9
6.1 - Hose cleaning . . . 9
6.2 - Hose replacement . . . 9
6.2.1 - Hose removal ALX150 . . . 9
6.3 - Roller adjustment . . . 10
6.3.1 - Roller adjustment ALX150 . . . 10
6.4 - Maintenance and periodical controls ALX series . . . 11
7 I STORAGE . . . 11
7.1 - Pump storage . . . 11
7.2 - Hose storage . . . 11
8 I TROUBLESHOOTING . . . 12
9 I CHARACTERISTICS AND TECHNICAL SPECIFICATIONS . . . 13
9.1 - Performance curves . . . 13
9.2 - Overall dimensions . . . 14
9.3 - Nomenclature . . . 15
9.4 - ALX Spare parts list . . . 16
9.5 - Generated noise and temperature . . . 17
10 I COMPLEMENTARY INSTRUCTIONS FOR ATEX CERTIFIED MATERIAL . . . 18
11 I SECURITY FORM . . . 25
12 I STATEMENT OF CE COMPLIANCE . . . 26

ALX
Manual Usage / Security and Guarantees

1 | HOW TO USE THIS MAINTENANCE MANUAL

This manual is specific to ALBIN PUMP SAS (ALBIN PUMP) ALX series peristaltic pumps. It allows the users to install, to start and to carry out maintenance on these pumps. All persons, fitters and users must read this maintenance manual in its entirety. Documents concerning the gearbox, the electrical motors, as well as all other options (hose rupture detector, etc.) are provided in annex. Refer to the applicable section in this document to understand specific details regarding that component.

Your local ALBIN distributor can be contacted regarding information not contained in this manual. For a quicker reply, please provide the following information:

- Type of pump
- Pump serial number
- Reference of order

You can also visit our website albinpump.com for further information.

2 | PUMP USE AND TRAINING

2.1 - USE OF THE PUMP

The pump was defined for a specific application. Any other use which does not comply with envisaged use is not guaranteed. ALBIN PUMP cannot be held responsible for damage or possible wounds / injuries produced during the use of the pump. The pump was designed in accordance with EU norms and applicable directives. Use the pump for applications that have been approved by the appropriate ALBIN personnel or distributors. If you want to change your application, first contact your ALBIN PUMP distributor.

2.2 - RESPONSIBILITY

ALBIN PUMP is not responsible for damage or wounds / injuries caused by mishandling of products, disregard of security directives and maintenance instructions contained in this manual, or by negligence during the installation, use, service, or repair of ALBIN hose pumps. Moreover, additional directives of security can be necessary according to working conditions or according process. Contact your ALBIN PUMP distributor if you notice a potential danger during the use of the pump.

2.3 - TRAINING OF THE USER AND INSTRUCTIONS

Every person who installs, uses or performs any operations of maintenance on the pump must be qualified and must have previously read this technical manual. Any temporary personnel must be supervised by skilled users.
The order of execution of operations defined in this manual must be absolutely respected. Store this manual next to the pump so that it can be consulted at any time.

ALX
Description

3 | DESCRIPTION

3.1 - IDENTIFICATION OF THE PUMP

ALBIN PUMPS are identifiable by the pump plate located on the frame. The plate includes the pump type and serial number of the pump. This serial number leads to all information concerning building materials, nature of the hose, characteristics of the gearbox and characteristics of the motor. The gearbox and motor have their own descriptive plate that states the reduction ratio, power, and electrical voltage.

3.2 - OPERATION PRINCIPLE

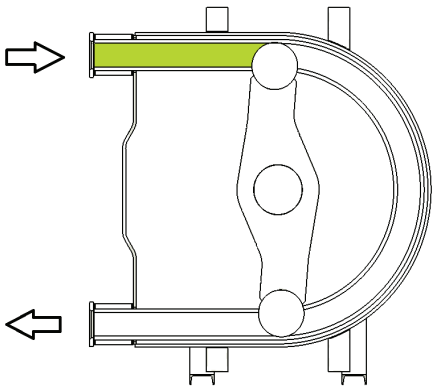

PHASE 1

The pump hose is compressed successively by two rollers assembled on a rotating wheel. The first roller, by pressing the walls of the hose, will create a vacuum and attract the pumped liquid into the hose.

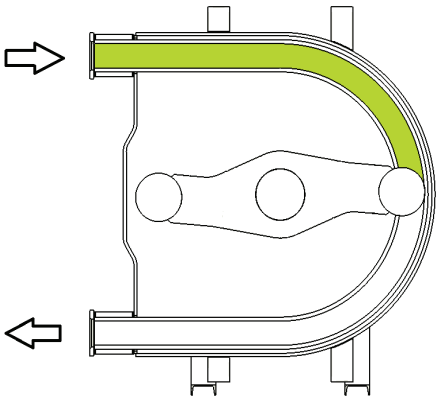

PHASE 2

The pumped liquid has now entered the hose. The second roller will compress the hose and push the liquid towards the pump outlet.

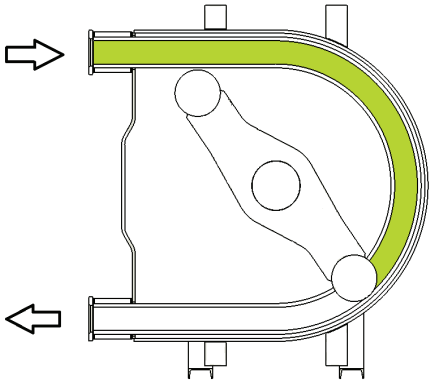

PHASE 3

As soon as, at the discharge side, the roller is detached from the hose, the other roller diametrically opposite is already in compression thus avoiding an internal product leakage. The product is then successively sucked and pushed due to the wheel rotation.

3.3 - PUMP CONSTRUCTION

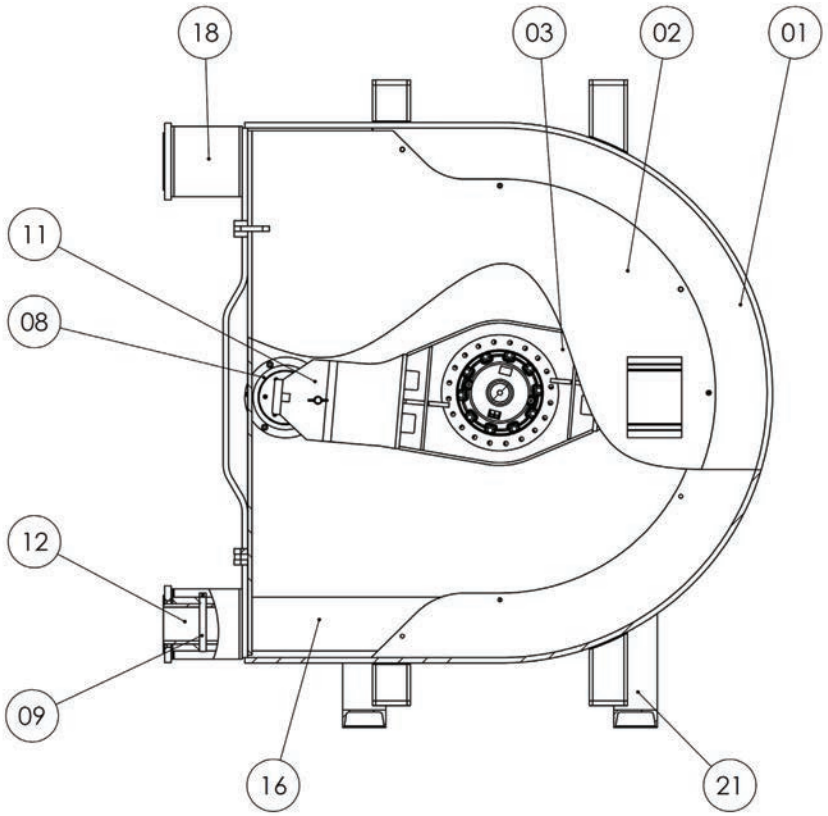

Part No	DESIGNATION	MATERIAL ALX150
1	CASING	STEEL
2	COVER	STEEL
3	WHEEL	STEEL
8	ROLLER	POLYAMIDE
9	CLAMP ON HOSE	STAINLESS STEEL
11	ROLLER BRACKET	STEEL
12	INSERT	STAINLESS STEEL
16	HOSE	see §3.4
18	FLANGE BRACKET	STEEL
21	FRAME	STEEL

3.4 - HOSE

The ALBIN PUMP hoses are manufactured according to very strict specifications to acquire the best performances of the pump and to assure an optimum hose life. They are available in different materials: Natural Rubber (NR), Perbunan (NBR), EPDM, Neoprene, Norprene, PharMed, Silicone and Hypalon® or other. The material of the hose must be compatible with the pumped liquid.

HOSE DIMENSIONS

mm (Inch)

PUMP	Ø INSIDE	THICKNESS	LENGTH
ALX150	150 (5.9)	25 (0.9)	5100 (200.8)

3.5 - GEAR BOX

Our standard gearboxes are planetary drives for pumps ALX150. They have been sized according to the important radial loads of the pump. Consult the gearbox maintenance manual provided with the pump to know the quantity of lubricant requested as well as the periodicity of oil change.

3.6 - ELECTRICAL MOTORS

The standard motors provided on our pumps are squirrel-cage motors and have a 460V 60Hz three-phase voltage. Voltage is dependent on the selected power supply. If the pump has to work in a potentially explosive environment, please refer to the complementary information on ATEX compliances and contact your ALBIN PUMP distributor.

3.7 - AVAILABLE OPTIONS

ALBIN PUMP offers several options for their pumps:

- Hose rupture detector.
- Revolution-counter.

Please contact your ALBIN PUMP distributor for any information about these different options.

4 | INSTALLATION

4.1 - UNPACKING AND CONTROL

During the receipt of the pump, please follow the instructions printed on the packing. Make a visual inspection to insure that no damage occurred during shipment. If this is the case, please contact your ALBIN PUMP distributor as soon as possible.

4.2 - CONDITIONS OF USE

ALX pumps can work in atmospheres where the temperature is situated between -20°C (-4°F) and 45°C (113°F). Pumps are coated with a paint which will protect them against certain aggressive environments. They are designed for indoor and outdoor setup.

4.3 - SET UP

Before installing the pump, check the following points:

- The pump is delivered with a frame provided with four anchoring holes. It must be fixed on a solid base with a slope which does not exceed 5mm for 1m and must be firmly fastened to this one.
- Require enough space around the pump to carry out maintenance. If such was not possible, consider the moving of the pump to a space provided for this purpose.
- Make sure that the room is adequately ventilated to relieve the heat generated by the pump. Leave a space behind the motor ventilator hood so as not to obstruct air intake.

4.4 - PIPING

Suction line piping:

- The internal diameter of the piping must be equal to or greater than that of the pump hose (see §3.4).
- It must be the shortest and most direct possible to avoid suction loss.
- Suction pressures at higher operating pressures may cause the pump to rotate when the pump is disengaged. Above 1 bar, consider adding a suction line valve to prevent this occurrence.
- Limit the presence of bends and make sure that they are as large as possible.
- Make sure that piping can support the service pressure of the pump.

Discharge line piping:

- The internal diameter of piping must be equal to or greater than that of the pump hose (see §3.4).
- It must be the shortest and most direct possible to avoid discharge pressure loss.
- Limit the presence of bends and make sure that they are as large as possible.
- Provide a space for a pulsation dampener (see picture below).
- If there is a valve on the discharge line, install a pressure relief valve or an over pressure protection gauge to avoid any possible damage to the pump and to the installation.
- It is recommended to install a flexible line to help absorb pulsation.

During the pump ground study, provide enough space for the hose change.
Distance (L) is the required length for hose removal.

DIMENSIONS

mm (inch)

PUMP	L
ALX150	2500 (98.4)

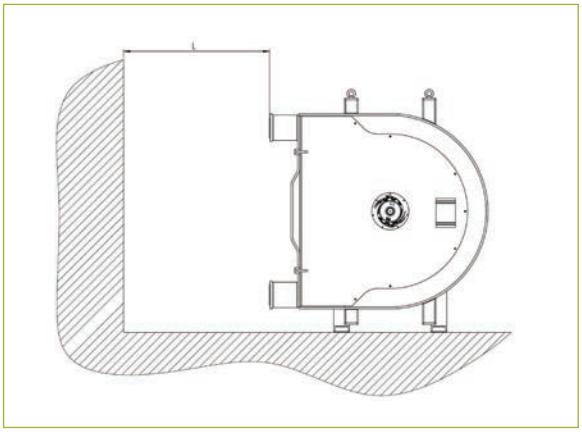

4.5 - LIFTING THE PUMP

Pumps are provided with two lift holes (eyebolts) placed on the upper part of the frame. While lifting the pump, respect the following points:

- Lift the complete hose pump using the lifting holes plus additional support on the gearbox and the motor using suitably rated straps or slings.
- Never exceed the upper limits of lift and control the motorized pump weights in the table below.
- The motorized pump, given its centre of gravity, will tend to overbalance on the pump head side. Make sure that the persons are at a secure distance from the pump to avoid any risk of wound.
- Never raise the pump otherwise than by the pump's lifting rings.
- Never raise the pump by it's orifices.

WEIGHT

kg (lbs)

PUMP	ALX150
Approx. Weight	2500 (5512)

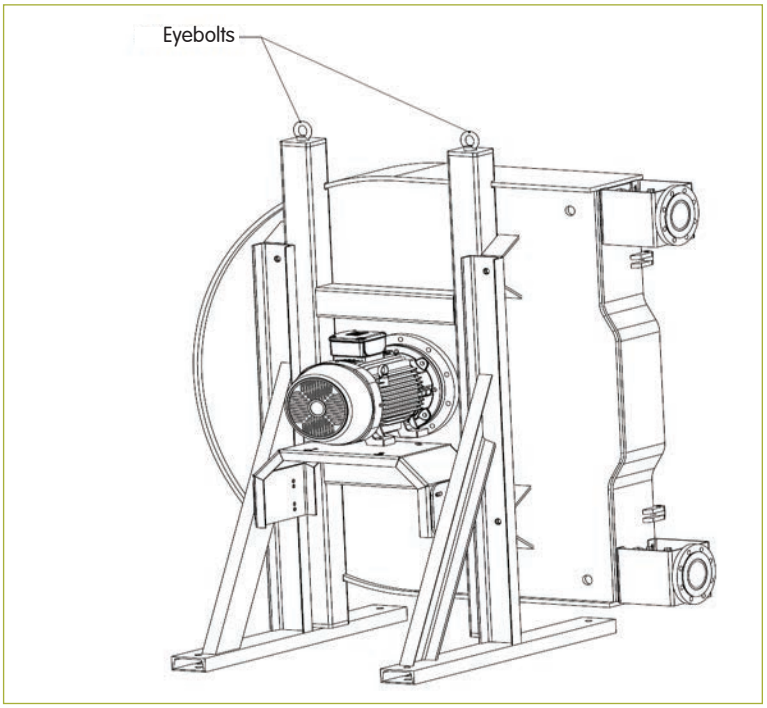

5 | PUMP START-UP

5.1 - PREPARATIONS

a. Connect the electrical motor in accordance with the local rules and regulations. Perform this work by qualified personnel.
b. Undertake roller adjustment of the pump according to the pump process (see §6.3). The pumps are always delivered with non-adjusted rollers.
c. Check the direction of rotation of the pump. It is recommended to install a rotation inverter on the motor for the hose change.

5.2 - START-UP

a. Install piping at the inlet and outlet of the pump.
b. Make sure that valves at the inlet and outlet are opened.
c. Start the pump by checking its direction of rotation by the front cover.
d. Check the flow and discharge pressure and adjust rollers if these figures don't match the pump specifications.

6 | MAINTENANCE

6.1 - HOSE CLEANING

The hose cleaning can be done without removing the hose. It can be done with water or with a cleaning liquid (check compatibility with hose material). With numerous products, it is necessary to clean the hose after every pumping session in order to avoid the hardening of the product inside the hose.

CAUTION! Make sure that the cleaning liquid temperature is adapted to the hose material.

6.2 - HOSE REPLACEMENT

CAUTION! Before any hose change, check the following points:

a. This service has to be performed by skilled personnel that is acquainted with this manual.
b. Isolate the pump from the power supply. Inlet and outlet valves have to be closed to minimize product loss. The pump will need to be re-connected power to expel and load in the hose in subsequent steps.
c. Always carry clothes and necessary protection according to the pumped product.
d. Respect all security and environmental rules necessary for the manipulation of the pumped product.

6.2.1 - HOSE REMOVAL FOR ALX150

1 - Disconnect and remove the suction and discharge piping.
2 - At the suction end, loosen clamps (REF 9). Extract the insert (REF 12) and remove the flange (REF 47). The flange may require an additional tool (e.g. prybar) to be removed, carefully, as to not damage the insert/flange.
3 - At the discharge end, loosen clamps (REF 9). Extract the insert (REF 12) and remove the flange (REF 47) as well as the brackets (REF 18). Remove clamps (REF 9).
4 - Jog run the motor to deliver the hose from the pump casing at the outlet side.

CAUTION! The hose can come out of the pump casing very fast and cause harm. Check that there is not anybody in front of the pump´s orifices while removing the hose.

CAUTION! Never run the pump without the front bracket and front cover front cover fully secured.

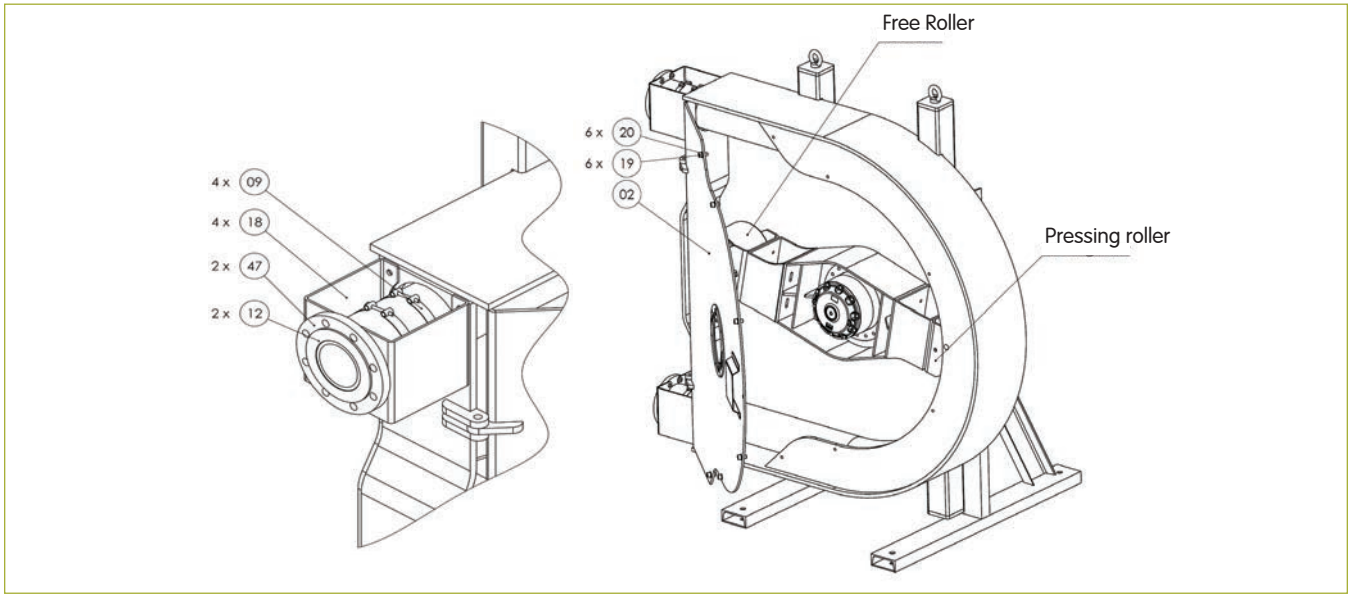

6.3 - ROLLER ADJUSTMENT

CAUTION! The roller adjustment is an operation which consists of adjusting the roller brackets to prevent any internal leakage. An internal leakage considerably reduces the lifetime of the hose as well as the flow. As a result, it is essential to adjust the rollers according to the rotation speed of the pump, the desired discharge pressure and the liquid viscosity.

WARNING! Never run the pump without the front cover.

6.3.1 - ROLLER ADJUSTMENT ALX150

NOTE : The pressure setting must be checked when a new hose is installed because of variations in the hose thickness.

1 - Remove screws from #19 and #20 and open the cover #2.

2 - Loosen the screws of the bracket that is compressing the hose.

3 - Adjust the fixed roller bracket so that the back meets the rotor side as shown in the figure. Tighten the bracket screws.

4 - Place the front cover on the pump.

5 - Run the pump and place the palm of your hand over the inlet port (suction side) and check if the fixed roller is adjusted enough to create a suction. If not, remove the cover again and move the fixed roller until it meets the graduation mark 2.

6 - Repeat steps 4 and 5 moving the bracket sideways to marks 2, 3 or 4 until you obtain the correct suction -0.6 bar (-8.7 psi).

7 - Adjust the free roller to the same distance, replace the front cover and test-run the pump.

Re-adjust if necessary.

WARNING! The two rollers must be equally adjusted.

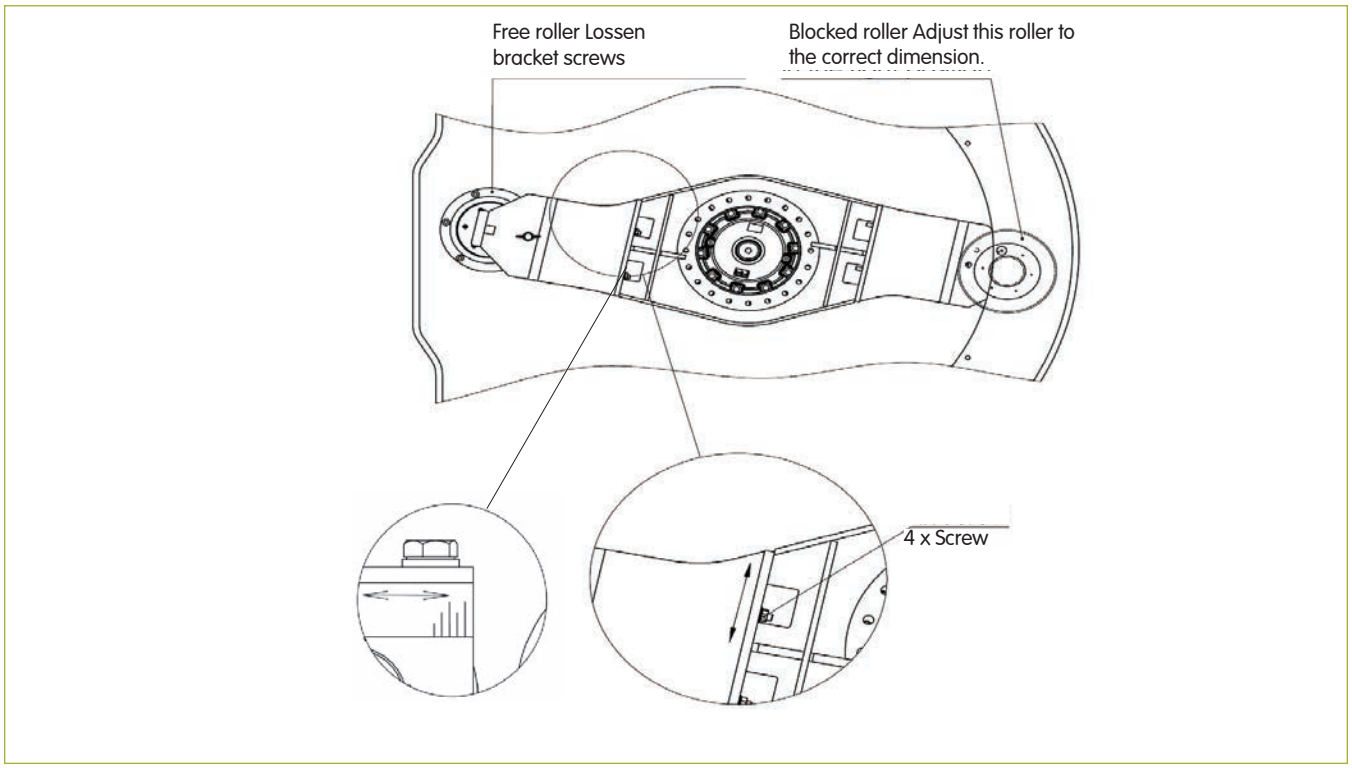

NOTE : Contact the factory for hose change-out instructions based on your specific pump configuration.

6.4 - MAINTENANCE AND PERIODIC INSPECTIONS ALX SERIES

1	**Pump hose replacement.**	Preventative maintenance suggests changing the pump hose after 90% of the life time of the first hose.	see §6.2
2	**Gearbox oil replacement.**	Refer to the gearbox maintenance manual provided with the pump.	
3	**Replacement of the rollers.**	If these are worn on the contact surface.	
4	**Check for wear on the roller pressing surface.**	At every hose change.	
5	**Check the presence of a gearbox oil leakage.**	Before starting the pump and periodically during the pump service.	
6	**Check for strange noises coming from the pump, gearbox and bearing case or abnormal pump casing temperature.**	Periodically during the pump service.	
7	**Check for leakages at inlet and outlet ports.**	Periodically during the pump service.	Re-tighten collars.

7 | STORAGE

7.1 - STORAGE OF THE PUMP

Store the pump in a sheltered and dry place and ensure that the storage room temperature is between -20°C (-4°F) and 55°C (131°F). Protect the pump if necessary and block the inlet and outlet orifices:
If pump remains idle for over 1 month, remove the hose from the pump or remove one of the rollers from the hose. If you can neither withdraw the hose or one of the rollers, run the pump 5min a week.

7.2 - STORAGE OF THE HOSE PUMP

Hoses must be stored sheltered from light in a cool place. The hose life is reduced after two years. The performance of hoses is reduced at the end of this expiration date due to the aging of rubber.

8 | TROUBLESHOOTING

PROBLEM	POSSIBLE REASON	RESOLUTION
The pump does not work	No power supply.	Check that the pump power switch is on position “ON”.
		Check the connection of the motor.
	The wheel of the pump stalls.	Check the fixing of the hose.
		Check that the discharge pressure is not too high.
		Check that the product hasn´t sedimentated in the hose.
Low capacity or pressure	Bad roller adjustment.	Readjust the rollers.
	Air leak at the inlet of the pump.	Check the tightening of the clamps of the pump and the sealing of the inlet piping.
	Valve closed or partly closed at inlet.	Fully open the valve.
	Wear of the hose.	Replace the hose.
	Product too viscous or the pump speed is too high compared to the product viscosity.	Ask for advice from your Albin distributor.
	Piping blocked or partly blocked at inlet.	Unblock piping at inlet and verify there is product flow that meets requirements.
Hose life is too short.	Incompatibility of the hose with the pumped product.	Make sure the compatibility of the hose with your product and contact your Albin distributor.
	Discharge pressure too high.	Check that the discharge pressure of the pump does not exceed the max. pressure of the pump (see curves). Check that the outlet piping is not blocked and that all valves are opened. Make sure that the security valve works correctly. Make sure that the piping friction losses do not exceed the value requested for an appropriate functioning of the pump.
	Pump speed too high.	Reduce the pump speed.
	Bad roller adjustment.	Check the adjustment.
	Too high temperature of the product.	Contact your Albin distributor.
Pulsations in piping.	Deficient fastening of the piping.	Fix piping correctly.
	Process creating important pulsations due to the product, the speed of the pump, discharge pressure or the sizing of piping.	Contact your Albin distributor.
Abnormal noise coming from the bearing case.	Worn bearings.	Replace bearings.

9 | CHARACTERISTICS AND TECHNICAL SPECIFICATIONS

9.1 - PERFORMANCES CURVES ALX150

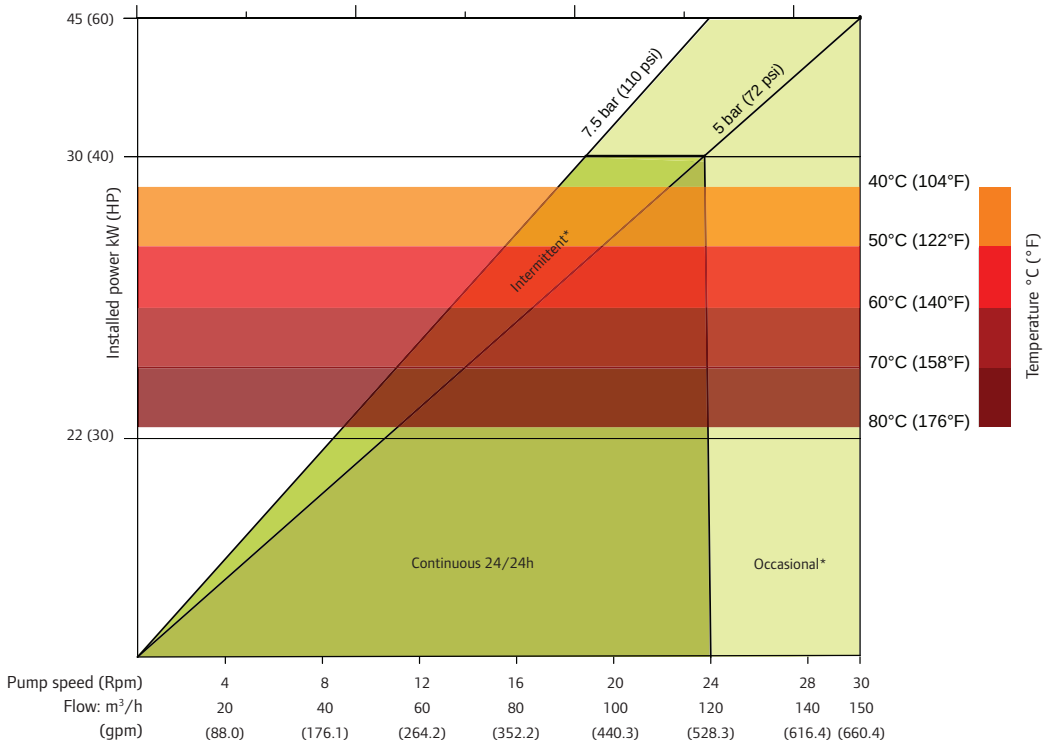

1 rpm = 5.000 m³/hr = 22.0143 gpm
1 rev = 83.3333 L = 22.0143 gal

*Intermittent use : minimum one hour stop after 2 hours run / *Occasional use : maximum one hour a day*

ALX
Characteristics / Technical Specifications

9.2 - ALBIN PUMP DIMENSIONS ALX150

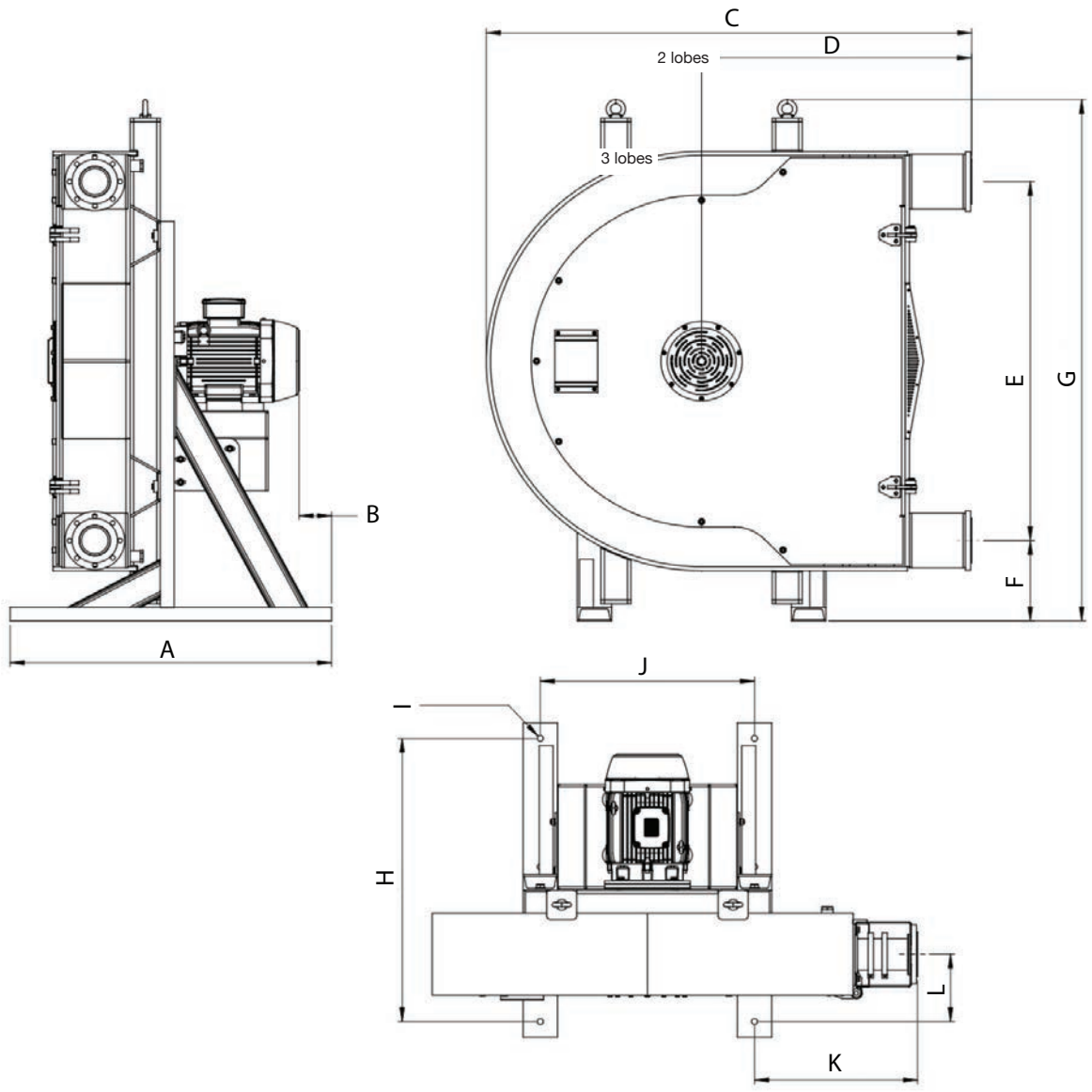

DIMENSIONS
mm (Inch)

TYPE	A	B	C	D	E	F	G	H	I	J	K	L
ALX150	1500 (59.0)	152 (6.0)	2266 (89.2)	1260 (49.6)	1720 (67.7)	385 (15.1)	2498 (98.3)	1350 53.1	4xø28 (4xø1.1)	1000 (39.4)	761 (30)	320 (12.6)

9.3 - NOMENCLATURE

EXPLODED VIEW ALX150

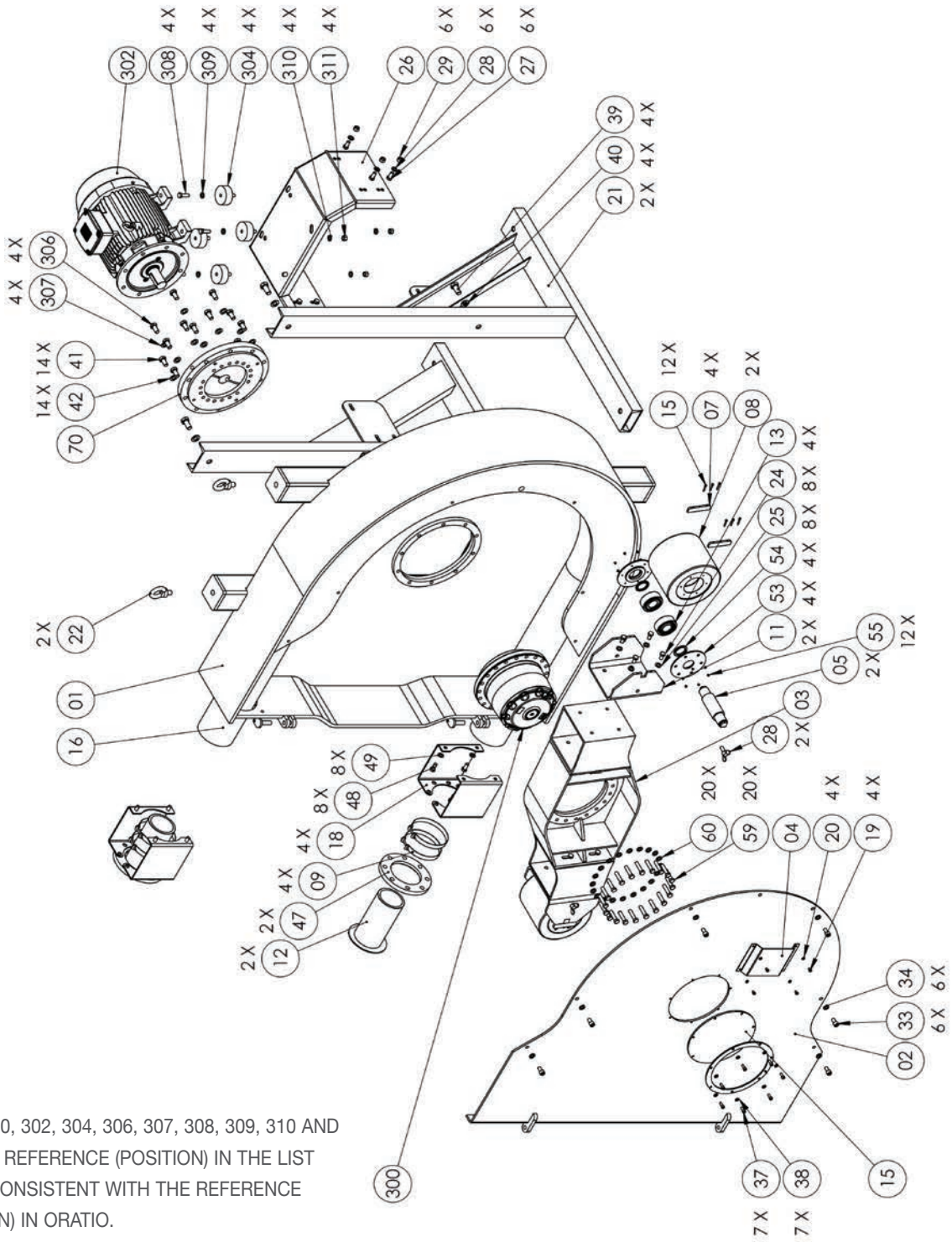

ITEMS 300, 302, 304, 306, 307, 308, 309, 310 AND 311 ARE REFERENCE (POSITION) IN THE LIST IS NOT CONSISTENT WITH THE REFERENCE (POSITION) IN ORATIO.

9.4 - ALX PUMP PARTS LIST (see exploded view)

REF.	DESIGNATION	ALX150
1	BODY / CASING	ALX1500115
2	COVER	ALX1500210
3	WHEEL	ALX1500315
4	DOORKNOB	ALX1500415
5	ROLLER SHAFT	ALX1500535
6	SLEEVE	ALX1500600
7	BLOCK BRACKET	ALX1500750
8	ROLLER	ALX1500830
9	HOSE CLAMP / INSERT	ALHCL188200
10	CIRCLIPS ROLLER	SC0845CSS
11	ROLLER BRACKET	ALX1501140
12	INSERT	ALX1501200
13	ROLLER BEARING ROLLER	ALHBEARNJ2310ECP
15	WINDOW	ALX1501510
16	HOSE	REF TO HOSE OPTION
18	BRACKET INSERT	ALX1501800
19	DOOR HANDLE SCREWS	SC0816CSS
20	WASHER DOOR HANDLE	WAM08MSS
21	FRAME	ALX1502105
22	EYEBOLT	ALX1502106
24	SCREW CLAMP ROLLER	ALHEYM24ZN
25	BRACKET WASHER ROLLER	SC1640HSS
26	ENGINE SUPPORT	WAM16MSS
27	ENGINE SUPPORT SCREWS	ALX1502101-00-RR17
28	WASHER ENGINE SUPPORT	SC1640HSS
29	NUT ENGINE SUPPORT	WAM16MSS
33	COVER SCREWS	NU16NYSS
34	WASHER SCREW COVER	SC1630CSS
37	SCREW WINDOW	WAM16MSS
38	WINDOW WASHER	SC1020HSS

REF.	DESIGNATION	ALX150
39	FRAME SCREWS	WAM10MZN
40	WASHER FRAME	SC2450HSS
41	GEAR SCREW	WAM24MSS
42	REDUCING WASHER	SC2075HSS
47	FLANGE	WAM20ZSS
48	SCREW CLAMP INSERT	ALH1504700
49	WASHER BRACKET INSERT	SC1630HSS
52	SEAL FLANGE ROLLER	WAM16MSS
53	SEAL ROLLER	ALX1500560
54	SCREW FLANGE SEAL ROLLER	ALHSH5072
59	WHEEL BOLTS	SC0640TFSS
60	WASHER WHEEL BOLTS	SC1660HSS
70	CENTERING FLANGE REDUCER	WAM16MSS
300	REDUCER	ASK ALBIN
302	ENGINE	ASK ALBIN
304	SILENTBLOCK ENGINE	ASK ALBIN
306	SCREW ENGINE / GEARBOX	ASK ALBIN
307	WASHER MOTOR / GEARBOX	ASK ALBIN
308	ENGINE / SILENT SCREW BLOCK	ASK ALBIN
309	WASHER MOTOR / SILENT-BLOCK	ASK ALBIN
310	WASHER SUP WORD / SILENT	ASK ALBIN
311	NUT SUP WORD / SILENT	ASK ALBIN

9.5 - GENERATED NOISE AND TEMPERATURE

NOISE:

The ALBIN PUMPS do not generate more than 60dB during their operation.

TEMPERATURE:

The cover and the pump casing can become very hot due to the friction on the hose and liquid temperature. If you need to limit the pump temperature, please contact your ALBIN PUMP distributor.

ALX
Supplemental Instructions for ATEX Certified Materials

10 | SUPPLEMENTAL INSTRUCTIONS FOR ATEX CERTIFIED MATERIALS

Peristaltic hose pump

Complementary instructions for ATEX certified material.

Models: ALBIN PUMP ALX

Pumping and operation in zone 0 is completely banned.

The pumps are planned for a use in the following gas and dust explosive atmospheres.

II 2G : zone 1 and 2
II 3G : zone 2 only
II 2D : zone 1 and 2
II 3D : zone 2 only

The following instructions must be read jointly with:

> All ATEX regulations for the country for which the pump is destined.

> Decrees, laws, directives, application circulars, the standards, the code of practice, and any other document concerning its place of installation.

No responsibility whatsoever is taken for the non-observance of these instructions.

The ATEX form provided by the customer which stipulates all the data concerning his process and application of the pump is the only evidence in case of dispute. The non-observance of this data will disengage the responsibility of ALBIN PUMP.

This information is complementary to our general maintenance manual.

The installation of the material must be carried out by qualified and skilled personnel.

Our equipment is marked EEC with the ATEX 94/9/CE title.

Ensure compatibility between the indications being reproduced on the gauge, the present explosive atmosphere, the zone of use, ambient and surface temperatures.

Until the 30.06.2003, the equipment on the market could be equipped with accessories or (and) components certified according to the rules of CENELEC relating to the electric materials usable in explosive atmospheres of group II. From this date, the accessories or (and) component assembled equipping the motors with our pumps must have an EEC examination certificate.

ALX

Supplemental Instructions for ATEX Certified Materials

SUMMARY

1 - Level of pump certification

2 - Protection of the pumping part

3 - Protection of the transmission part

4 - Particular dispositions when using a frequency inverter

5 - Dry running the pumps

6 - Replacement of parts

7 - Solvents incompatible with pumps seals

8 - Possible leakage of pumped liquid

9 - Drive of the pump

9.1 Electric installation of the motor or the motor reducer of the pump

9.2 Ground connection of the pump

9.3 ATEX characteristics of the motor or the motor reducer of the pump

10 - ATEX characteristics of the pumping installation

11 - Security form

12 - Pumping vat of retention

13 - Marking of the pump

ALX

Supplemental Instructions for ATEX Certified Materials

1 - Pumps certification level

All ALBIN peristaltic pumps are certified with II 2G T4, II 3G T4 or II 2D T4 certification.

All ALBIN peristaltic pumps are certified with II 2G T4, II 3G T4 or II 2D T4 certification. The pumps are machines whose surface temperatures are dependent on the temperature of the product that they pump. Moreover, the peristaltic pumps have “mechanical” heating due to the deformations of the hose, depending on the discharge pressure and speed of rotation of the pump. So, the level of protection II 2G T4, II 3G T4, II 3D T4 and II 3D T4 is obtained with the working limits determined at the reception of the ATEX form (see adjoined form).

Pumps ALX150 is limited to a maximum discharge pressure of 2 bar (29 psi).

Going beyond of the working limitations specified at the sale is regarded as an abnormal function of the pump. This can generate surface temperatures higher than the safe maximum surface temperatures recommended in the classification of temperature (T) for which the pump was certified. It is the responsibility of the operator to respect these working limits.

In order to use the pump industrially with the required safety levels, safety devices have been provided (see the chapters “Protection of the pumping part” and “Protection of the transmission part”).

2 - Protection of the pumping part

The heating of the pumping part is directly related to the functioning temperature of the hose.

The lifespan of the hose, which is the heart of any peristaltic pump, is strongly dependent on the working temperature of the hose: it imposes the working limits of the ALBIN peristaltic pumps. Consequentially, the working temperature of the hose (and thus the heating of the pump) must be known and controlled, and it depends on the three following parameters:

> Temperature of pumped product
> Number of rotations of the pump
> Discharge pressure

For pumps II 2G T4: use of a PT100 temperature sensor only in a gas atmosphere

The permanent control of the maximum surface temperature of the pump housing makes it possible to control the heating of the pump effectively.

In the event of dysfunction of the pump (excessive rotation, too high temperature of pumped product, unsuitable shimming of the shoes…), the temperature sensor will detect any passing over the critical temperature of the body and will stop the pump before the surface temperatures of the pump exceed the limit corresponding to the classification of temperature (T) of the pump.

The threshold of release of the temperature sensor will have to be adjusted from 0°C (32°F) to 75°C (165°F) more or less 5°C (41°F), with a 10°C (50°F) hysteresis.

For the certified pumps II 3G T4, II 2D and II 3D: For dust zones, D becomes IP6X

According to the specific requirements for ATEX materials group II category 3, the use of such materials in an exposable atmosphere is adapted only under normal working conditions of the known material.

Thus, the end-user must make sure that the pump is used under normal working conditions, and that the particular working limits indicated in this manual are respected.

3 - Protection of the transmission part

The reducer and the motor which motorize the pump must be used within the limits of working defined by the manufacturers of these materials. Going beyond these limits is likely to generate a risk of ignition of the atmosphere surrounding the material.

The ALBIN PUMP installations are in particular designed so that the normal working conditions of the pump do not generate an overload of the motor or the reducer.

So that the function limits of these components are not exceeded, even in case of dysfunction of the pump, the motor will have to be protected from the overcurrent, in accordance with the code of practice.

4 - Particular dispositions when using a frequency inverter

The ALBIN peristaltic pumps have variable limits of working according to the discharge pressure, number of rotations of the pump and temperature of the pumped product. These working limits are mainly imposed by the heating of the hose, on which the lifespan is strongly dependent.

Within the framework of an application required to change the speed of the pump, the three following points will have to be checked.

> Temperature of pumped product
> Number of rotations of the pump
> Discharge pressure

The maximum values of use will be fixed at the determination of the pump whose copy is in the appendix.

5 - Dry running the pumps

The ALBIN peristaltic pumps can function in the absence of liquid in the pump, without causing heating of the pump higher than the classified of temperature (T), in particular for the period of starting-up of the pump.

In fact, dry running the pump with blocked inlets or outlets generates too high demand on the pump hose, and can generate high internal temperatures because of the compression and decompression of the air locked up between the pump and the blocked opening.

This type of dysfunction is not controllable by a safety device (of sensor type) because the pump is dry and the mechanical constraints generated on the pump are low. Starting up the pump must thus be done after having checked that the inlet and outlet are not blocked.

Nevertheless, dry running is not a normal function of the pump and if it doesn't directly constitute a risk of ignition, it leads to premature wear and tear of the hose. This type of function must be limited as much as possible.

ALX
Supplemental Instructions for ATEX Certified Materials

6 - Replacement of parts

The parts should be replaced only by original ALBIN parts which correspond to the configuration of origin of the pump. If necessary, the characteristics of the pump are modified and the ATEX certification of the pump is not applicable any more.

With each hose replacement, the adjustment of compression of the hose must be controlled and adapted to the instructions of adjustment registered in the handbook.

The technicians who intervene on ATEX material must be ATEX trained and approved.

7 - Solvents incompatible with the pump's seals

The user must make sure that the seals and the hose with which the pump is equipped are compatible with the pumped product and the products used in the cleaning of the pump.

8 - Possible leakages of pumped liquid

The possible leakages of liquid by the pump's seals do not generate a risk of ignition as long as the explosive atmosphere surrounding the material corresponds to the type of atmosphere for which it was planned.

You have to check that in contact with the atmosphere surrounding the pump or of a material located near the pump, the pumped liquids are not likely to create an explosive atmosphere for which the material was not envisaged.

The rupture of the hose, which is a wearing part, can involve important leakage of pumped liquid. A hose detector makes it possible to detect these leakages and will stop the pump if necessary.

9 - Drive the pump

The maximum speed of rotation of the pumps must be respected (see certification of the pumps). At the start or after any modification of the pumping installation, the speed of rotation of the pump must be controlled and must be lower than the maximum speed indicated in the instructions.

9. 1 - Electric installation of the motor or the motor reducer of the pump

Check the agreement between the indications of the motor gauge and the supply voltage.
For the connection of the motor to the electrical supply network, follow the indications of the manual supplied with the motor.

Follow the assembly diagram of wiring, make sure the wires are adapted to the power consumption and make sure the contacts are tight.

The motors must be protected by suitable circuit breakers and fuses.
Make sure the earth connections are properly made.

Dry run the pump to make sure that the connections are correct and that the direction of rotation corresponds well with the suction and the discharge of the installation.

9. 2 - Ground connection of the pump

A bonding strip lug can be seen on the frames and on the pump housing of ALX type pumps.

9. 3 - Flexible coupling

The motor or motor reducer must have ATEX characteristics adapted to recognized use (group gas IIB, class of temperature T4) and must explosion-proof.

10 - ATEX characteristics of the pumping installation

A pumping installation can be composed of materials (motor, reducer, sensors…) from which ATEX characteristics are different from those of the pump.

In this case, the group will have ATEX characteristics corresponding to characteristics ATEX of the component with the lowest level of protection.

11 - Pumping vat of retention

At a constant arrival of liquid in a vat of retention in an ATEX zone, the uninterrupted start-up can generate a classification in zone 0.

The case can only arise when the pump is used in the starting position. It is then imperative that the suction pipe always has liquid present so as not to create explosive conditions in the presence of fuel and combustive agents. Thus, the adjustment of the low point of the tank will have to be higher than the opening of the suction pipe.

That will always result in the presence of liquid and not of gas and liquid.

ALX
Supplemental Instructions for ATEX Certified Materials

12 - Marking of the pump

The marking of the ALBIN PUMPS is of type:

ALBIN:
TYPE ALX
 II 2G
Ex h II C T4 Gb
N° series:
Year
.....

The marking of the ALBIN PUMPS is of type:

ALBIN:
TYPE ALX
 II 2G
Ex h II C T4 Gb
N° series:
Year
.....
In the case of a pumping group, ATEX certified materials will retain their original markings.

ALX
Security Form

11 | SECURITY FORM

In compliance with Health & Safety Regulations you, the user are required to declare the substances that have been in contact with the product(s) you are returning to ALBIN PUMP or any of its subsidiaries or distributors. Failure to do so will cause delays in servicing the item or in issuing a response. Therefore, please complete this form to ensure that we have the information before receipt of the item(s) being returned.

A FURTHER COPY MUST BE ATTACHED TO THE OUTSIDE OF THE PACKAGING CONTAINING THE ITEM(S).

You, the user, are responsible for cleaning and decontaminating the item(s) before returning them. Please complete a separate decontamination certificate for each item returned.

1.0 COMPANY

Company name . . . . . .

Address . . . . . .

City . . . . . .

Postal code . . . . . .

Country . . . . . .

Telephone . . . . . .

Fax number

2.0 PUMP

2.1 Serial number . . . . . .

2.2 Has the pump been used ? YES NO

If yes, please complete all the following paragraphs. If no, please complete paragraph 5 only

3.0 Details of substances pumped

3.1 Chemical Names

a)_____ b)_____ c)_____

3.2 Precautions to be taken in handling these substances

a)_____ b)_____ c)_____

3.3 Action to be taken in the event of human contact

a)_____ b)_____ c)_____

3.4 Cleaning fluid to be used if residue of chemical is found during servicing

4.0 I hereby confirm that the only substances(s) that the equipment specified has pumped or come into contact with are those named, that the information given is correct, and the carrier has been informed if the consignment is of a hazardous nature.

5.0 Signatory authorized

Signed _____ Name _____

Position _____ Date _____

Remarks: to assist us in our servicing please describe any fault condition you have witnessed.

12 | STATEMENT OF CE COMPLIANCE

SECTION 1.0

Description of the pump:
Producer:
ALBIN PUMP
Z.I. du Meyrol
6, Avenue du Meyrol
F-26200 MONTELIMAR
FRANCE

TEL : +33.4.75.90.92.92

Type:

ALX150

Serial N°:

Description : Volumetric pump, hose pump

SECTION 2.0

Applicable directives:

Machinery directives:
2006/42/EC

SECTION 3.0

Label:



SECTION 4.0

Statement:

We declare under our responsibility that the equipment defined in section 1.0 satisfies in all the directives of the European Community specified in section 2.0 and in the French work legislation.

Thomas Mapelli

Date: XX XXX XXXX

SAFETY AND CONTROL MEASURES TO RESPECT IMPERATIVELY

1 - Mechanical risk

Ensure that all protections (cover, sight glass, ventilator hood, coupling protection) are in place before operating the pump. Disconnect the electricity supply before any mechanical intervention, except during a hose replacement. Hose replacement must be done with the pump cover closed. While replacing a hose, wear protective gloves and clothes and keep hands away from the brackets, suction and discharge flanges.
During the pump maintenance, check that the lifting points are correctly used.
The frame of the pump must be firmly fastened to the ground.

2 - Electrical risk

Ensure that the electrical installation is conforming to the standards required in the country of use especially regarding earth and thermal protection.

3 - Operational risk

Check the compatibility of the products to be pumped with:

- The hose pump principle.
- The hose material.
- The inserts material.
- The shoe material.

ALBIN PUMP cannot guaranty the hose lifetime or the product loss due to a hose burst. It is the operator's responsibility to prevent pumped liquid loss with additional hose rupture detectors and or automatic shutdown valves. Check §2.4 conditions of guarantee for further information.

Ensure that the pump is compatible with the required process. Ensure that the pressure applied on the suction side is compatible with the pump. The rupture of the hose and its consequences must be taken in account:

- The pump casing can be filled with the pumped product.
- If the suction line is on load, this one can empty into the pump casing and leak out of the pump.
- If the discharge line is under pressure, the pumped product may be forced back into the pump casing and leak out of the pump.

A leakage detector as well as automatic shutdown valves are recommended in order to prevent such consequences. While draining the pump following a hose rupture, take note of the risk of pollution caused by the pumped product.

The pump, being volumetric, may suffer dangerously high pressure by even partial blockage of the discharge line. Ensure that all protections have been made regarding this aspect.
Before each use, check the direction of rotation of the pump. While placing the pump under vacuum, mount window screws using an airtight glue to avoid air leakage.

Distributed by:

www.albinpump.com

albinpump@irco.com

About Ingersoll Rand Inc.

Albin Pump is a brand of Ingersoll Rand and part of the Precision and Science Technologies (PST) business segment. PST consists of a portfolio of complementary, mission critical brands such as Milton Roy®, ARO®, LMI®, Albin Pump, Thomas®, Welch®, Haskel®, Dosatron®, YZ®, Williams®, MP® and Oberdorfer®.

At PST, we deliver solutions for precision dosing and transfer of high value fluids in various markets such as medical, food and beverage, water and hydrogen. For more information, visit www.IRCO.com.

We are committed to using environmentally conscious print practices

©2021 Ingersoll Rand

PN 97999-1955
REV: A