CALL TOLL FREE 877-742-2878 FOR SALES AND SUPPORT

Return to BurtProcess.com

OPERATOR'S MANUAL EP10-PXXXX-XXX-XXX

INCLUDING: OPERATION, INSTALLATION AND MAINTENANCE

RELEASED: 2-24-23
REVISED: 3-1-24
(REV: D)

1" EVO SERIES™ ELECTRIC DIAPHRAGM PUMP

(NON METALLIC FLUID SECTIONS)

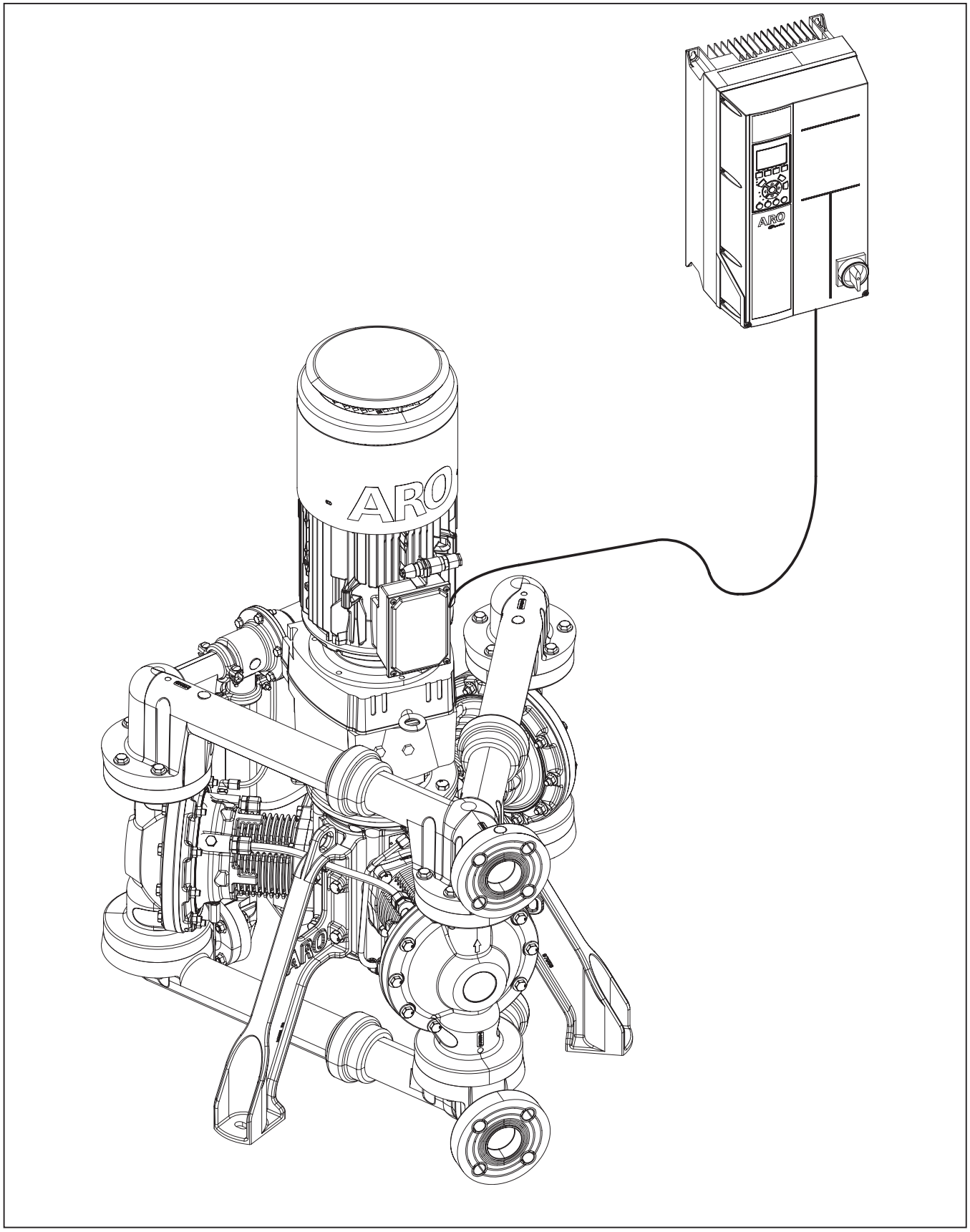

INGERSOLL RAND COMPANY INC
209 NORTH MAIN STREET – BRYAN, OHIO 43506
(800) 495-0276 • FAX (800) 892-6276
© 2024
arozone.com

ARO Ingersoll Rand

TABLE OF CONTENTS

1. TECHNICAL SPECIFICATIONS 3
    1.1. Pump Data 3
    1.2. Variable Frequency Drive (VFD) Data 3
    1.3. Electric Motor Data 5
    1.4. Nameplate Details 6
        1.4.1 Standard Nameplate 6
        1.4.2 Hazardous Nameplate 6
2. MODEL DESCRIPTION CHART 7
    2.1. Model Code Explanation 7
    2.2. Encoder Cable Assembly for Ordinary Motors 7
3. OPERATING AND SAFETY PRECAUTIONS 8
4. GENERAL DESCRIPTION 9
    4.1. Introduction 9
    4.2. Storage 9
    4.3. Unpacking 9
5. MECHANICAL INSTALLATION 10
    5.1. Pump and Motor Installation 10
    5.2. Pump and Gearbox Breather Installation . . 10
    5.3. VFD Mechanical installation 11
6. ELECTRICAL INSTALLATION FOR ORDINARY LOCATIONS 12
    6.1. VFD-Wiring Diagram 12
    6.2. General Wiring Practice for VFD 12
    6.3. VFD AC Mains – Input Power Requirements: 13
    6.4. Power Wiring 13
        6.4.1 VFD - Input Power Wiring 13
        6.4.2. VFD - Output Motor Wiring 13
        6.4.3. Motor - Input Power Wiring 14
    6.5. Control Wiring (Required) 14
        6.5.1. Leak detector wiring diagram 14
        6.5.2. Thermal protection – Ordinary motor 16
        6.5.3. Encoder Wiring – Ordinary Motor 16
    6.6. Control Wiring (Recommended) 17
        6.6.1. Safe Stop wiring diagram 17
    6.7. Control Wiring (Optional) 17
        6.7.1. Digital start/ stop control 17
        6.7.2. Analog Input – Speed control 18
        6.7.3. Analog Inputs – Torque (Pressure) Control 18
        6.7.4. Additional available Input/output (Optional) 19
    6.8. Configured Input / Output Summary - Ordinary 19
    6.9. VFD serial communication 19
    6.10. User defined readout 20
7. ELECTRICAL INSTALLATION FOR HAZARDOUS LOCATIONS 21
    7.1. General Wiring 21
    7.2. Power Wiring 21
    7.3. Control Wiring (Required) 21
        7.3.1 Leak Detector Wiring 21
        7.3.2 Thermal Protection - Hazardous Motor22
        7.3.3 Encoder Wiring - Hazardous Motor . . . 23
    7.4. Control Wiring (Optional) 23
    7.5. Configured Input/Output Summary - Hazardous 23
    7.6. VFD Serial Communication - Hazardous . . . 23
8. GROUNDING 24
    8.1. Pump Grounding 24
    8.2. VFD Grounding 24
    8.3. Electric Motor Grounding 24
9. OPERATION 25
    9.1. Pre Operation Checklist 25
    9.2. Personal Menu Settings 25
    9.3. VFD Smart Setup 26
10. MAINTENANCE 27
    10.1. Service Kits 27
11. SUBSYSTEM OVERVIEW 28
    11.1. Fluid section 28
    11.2. PRV section 31
    11.3. Crankcase section 33
    11.4. Oil Piston pump section 36
12. TROUBLESHOOTING 38
    12.1 Reset VFD to Factory Default Settings 38
13. DIMENSIONAL DATA 39
    13.1 Pump With Motor 39
    13.2. Variable Frequency Drive (VFD) 40
14. PERFORMANCE CURVE 41
15. CERTIFICATION 42
    15.1 Certification Standards and Markings 42
    15.2 Specific Conditions of Use 42
16. WARRANTY DECLARATION 43

1. TECHNICAL SPECIFICATIONS

1.1. Pump Data

Models..... See Model Description Chart for "-XXXXX".
Pump Type.. Electric Diaphragm Pump
Material .... See Model Description Chart
Weight (without motor)
EP10-EXXXX-XXX-XXA..... 225 lbs (102 kg)
EP10-PXXXX-XXX-XXA..... 231 lbs (105 kg)
Maximum Material Inlet Pressure② ..... 60 psig (4.14 bar)
Minimum Outlet Pressure @ Deadhead ..... 120 psig (8.3 bar)
Maximum Outlet Working Pressure ..... 180 psig (12.4 bar)
Maximum Flow Rate (flooded inlet) .... 54 gpm (204 lpm)
Displacement / Cycle @ 80 psig ... 0.25 gal. (0.95 lit.)
Maximum Particle Size ..... 1/8" dia. (3.3mm)
Wet Suction Lift..... 28 ft (8.5 m)
Dry Suction Lift ..... 14 ft (4.3 m)

Maximum Temperature Limits

	Min	Max	Min	Max
Ambient Temperature①	0° F	104° F	-18° C	40° C
Fluid Temperature	32° F	212° F	0° C	79° C
Fluid temperature should be further limited of one of the following materials of construction is used in the wetted sections:				
PTFE	40° F	212° F	4° C	100° C
Polypropylene	32° F	175° F	0° C	79° C
Conductive Polypropylene	32° F	175° F	0° C	79° C

⚠ **WARNING** ***Maximum fluid temperature of 79° C should never be exceeded to maintain hazardous area surface temperature nameplate rating.***

Dimensional Data..... See page 39 and 40
Mounting Dimension .. 0.63" X 0.94" (16 mm X 24 mm) oblong hole on ∅ 24.88" (∅ 632 mm) B.C.

Noise Emission Values in accordance with ISO 4871③	
Pump configuration	**EP10-PFPTT-CSV-ACA (PTFE Balls / Poly Seats)**
Sound Power	
41 hz (99 rpm) @ 100 psig	85.0 dB(A)
82 hz (198rpm) @ 60 psig	93.6 dB(A)
Sound Pressure	
41 hz (99 rpm) @ 100 psig	75.3 dB(A)
82 hz (198rpm) @ 60 psig	83.9 dB(A)

1.2. Variable Frequency Drive (VFD) Data

	For Use with Ordinary Motor	For Use with Hazardous Motor
Part Number	136Z7166	136Z7167
Power	3.0 kW	3.0 kW
Input Voltage	380-500 VAC +/-10%, 3 Phase, 50/60 Hz	380-500 VAC +/-10%, 3 Phase, 50/60 Hz
Frame Size	A5	A5
Ingress Protection	NEMA 4X / IP66	NEMA 4X / IP66
Option A Slot	N/A - Available for Fieldbus Card Options	MCB 112 PTC THERMISTER CARD
Option B Slot	MCB 102 ENCODER CARD	MCB 102 ENCODER CARD
Efficiency	97%	97%
Approximate Weight	29.76 lbs (13.5 KG)	29.76 lbs (13.5 KG)
Operating Temperature (Full Scale)	32° to 113°F (0º to 45ºC)	32° to 113°F (0º to 45ºC)
Operating Temperature (Derate)④	14° to 122°F (-10º to 50ºC)	14° to 122°F (-10º to 50ºC)
Max Altitude (Without Derating)	3280.8 ft (1000 m)	3280.8 ft (1000 m)
Max Altitude (With Derating)	9842.5 ft (3000 m)	9842.5 ft (3000 m)
Continuous Output Current (380 - 440 V)	7.2 A	7.2 A
Intermittent Output Current (380 - 440 V)	11.5 A	11.5 A
Continuous Output Current (441 - 500 V)	6.3 A	6.3 A
Intermittent Output Current (441 - 500 V)	10.1 A	10.1 A
Continuous Input Current (380 - 440 V)	6.5 A	6.5 A
Intermittent Input Current (380 - 440 V)	10.4 A	10.4 A
Continuous Input Current (441 - 500 V)	5.7 A	5.7 A
Intermittent Input Current (441 - 500 V)	9.1 A	9.1 A

① Do not allow fluids to freeze inside of pump.
② When using inlet pressures higher than 10 psig (0.69 bar), the motor torque limit (VFD parameter 416) should be lowered to ensure the pump operates within the published operating map (see Section 14). The rule of thumb is that the inlet pressure (psig) plus the motor torque limit setting (VFD parameter 416 in %) should equal 115 or less. The formula for this is therefore: [Motor Torque Limit in %] = [115] – [Inlet Pressure in psig]. For example, an inlet pressure of 40 psig (2.76 bar) requires a motor torque limit of 75% (115 – 40 psig).
③ Values are determined according to noise test code ISO 20361 using ISO noise measurement standards. Measurement locations of 1m taken at pump/driver midline as per B.3.1 and 6.2 as defined in standard. Calculated A-weighted sound pressure level using half-spherical surface. Published using uncertainty value of 3.
④ The 0° to -10° C derating of the VFD is due to the limitation in visibility of the liquid crystal display (LCD). The VFD is capable of operating in temperatures as low as -18° C if running in "auto on" mode (serial or analog control) and not dependent on the keypad for pump running status or control.

1.2. Variable Frequency Drive (VFD) Data

	For Use with Ordinary Motor	For Use with Hazardous Motor
Part Number	132L0259	132L0258
Power	3 kW	3 kW
Input Voltage	200-240 VAC +/- 10%, 3 Phase, 50/60 Hz	200-240 VAC +/- 10%, 3 Phase, 50/60 Hz
Frame Size	A5	A5
Ingress Protection	NEMA 4X / IP66	NEMA 4X / IP66
Option A Slot	N/A - Available for Fieldbus Card Options	MCB 112 PTC THERMISTER CARD
Option B Slot	MCB 102 ENCODER CARD	MCB 102 ENCODER CARD
Effciency	96%	96%
Approximate Weight	29.8 lbs (13.5 kg)	29.8 lbs (13.5 kg)
Operating Temperature (Full Scale)	32° to 113°F (0° to 45°C)	32° to 113°F (0° to 45°C)
Operating Temperature (Derate) ④	14° to 122°F (-10° to 50°C)	14° to 122°F (-10° to 50°C)
Max Altitude (Without Derating)	3280.8 ft (1000 m)	3280.8 ft (1000 m)
Max Altitude (With Derating)	9842.5 ft (3000 m)	9842.5 ft (3000 m)
Continuous Output Current (200-240V)	12.5 A	12.5 A
Intermittent Output Current (200-240V)	20.0 A	20.0 A
Continuous Input Current (200-240V)	11.3 A	11.3 A
Intermittent Input Current (200-240V)	18.1 A	18.1 A

	For Use with Ordinary Motor	For Use with Hazardous Motor
Part Number	132X6017	132X6018
Power	3 kW	3 kW
Input Voltage	525-600 VAC +/- 10%, 3 Phase, 50/60 Hz	525-600 VAC +/- 10%, 3 Phase, 50/60 Hz
Frame Size	A5	A5
Ingress Protection	NEMA 4X / IP66	NEMA 4X / IP66
Option A Slot	N/A - Available for Fieldbus Card Options	MCB 112 PTC THERMISTER CARD
Option B Slot	MCB 102 ENCODER CARD	MCB 102 ENCODER CARD
Effciency	97%	97%
Approximate Weight	29.8 lbs (13.5 kg)	29.8 lbs (13.5 kg)
Operating Temperature (Full Scale)	32° to 113°F (0° to 45°C)	32° to 113°F (0° to 45°C)
Operating Temperature (Derate) ④	14° to 122°F (-10° to 50°C)	14° to 122°F (-10° to 50°C)
Max Altitude (Without Derating)	3280.8 ft (1000 m)	3280.8 ft (1000 m)
Max Altitude (With Derating)	9842.5 ft (3000 m)	9842.5 ft (3000 m)
Continuous Output Current (525-550V)	5.2 A	5.2 A
Intermittent Output Current (525-550V)	8.3 A	8.3 A
Continuous Output Current (551-600V)	4.9 A	4.9 A
Intermittent Output Current (551-600V)	7.8 A	7.8 A
Continuous Input Current (525-600V)	5.2 A	5.2 A
Intermittent Input Current (525-600V)	8.3 A	8.3 A

For more details, refer to the VFD manual PN 97999-1940.

④ The 0° to -10° C derating of the VFD is due to the limitation in visibility of the liquid crystal display (LCD). The VFD is capable of operating in temperatures as low as -18° C if running in "auto on" mode (serial or analog control) and not dependent on the keypad for pump running status or control.

1.3. Electric Motor Data

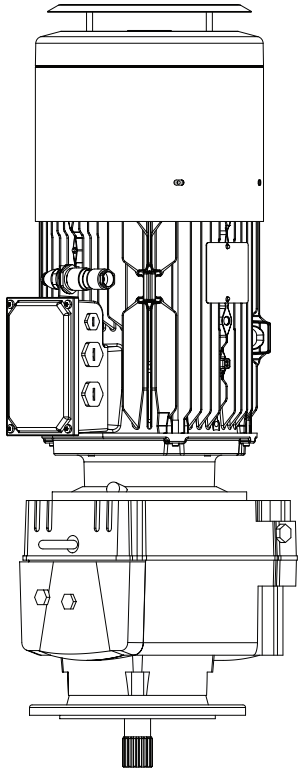

ORDINARY LOCATION MOTOR (Black)

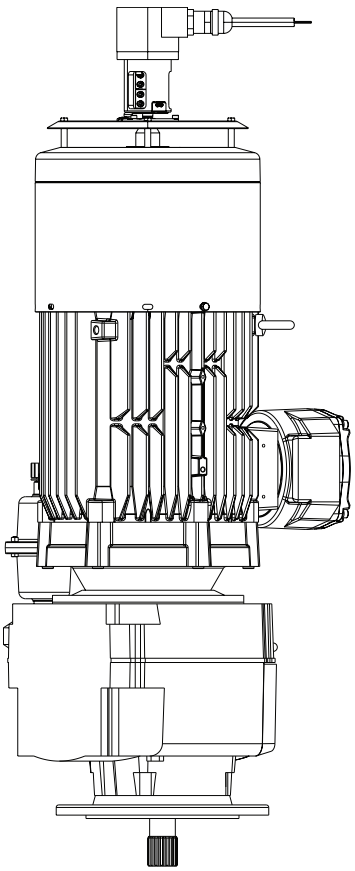

HAZARDOUS LOCATION MOTOR (Red)

Figure 1

	ORDINARY	HAZARDOUS	
Part Number	67564	67566-3	67566-1
Motor Option	A	B	C
Hazardous Certifications	N/A	IECEx, ATEX, NEC, CEC	IECEx, ATEX
Rated Power	2.2 kw	2.2 kw	
Rated Torque	14.3 Nm	14.3 Nm	
Efficiency	IE3	IE3	
Number Of Phases	3	3	
Polarity	4P	4P	
Voltage	230 VD / 400 VY	230 VD / 400 VY	
Frequency	50 Hz	50 Hz	
Index Of Protection	IP66	IP65	IP66
Insulation Class	F	F	
Encoder Type	Incremental	Incremental	
Encoder Characteristics	5V, RS422 (TTL), 1024 PTS	5V, RS422 (TTL), 1024 PTS - IP66 / 67	
Encoder Connection	12 Pin connector	10 m cable - flying leads	
Drain Plug Position	Drive end with plug	N/A	
Thermal Protection	2 PTO sensors in series	3 PTC sensors in series	
Approx. Weight	104.5 lbs (107 kg)	154 lbs (138 Kg)	
Exact Ratio	12.4	12.4	
Output Shaft	Spline	Spline	
Lubricant Type	PAO ISO VG 150	PAO ISO VG 150	
Lubricant Qty	1.15 Liters (pre-filled)	1.45 Liters (pre-filled)	
Main Cable Gland Type	2 x m20 + 1 x m16 with plugs	2 x m20 with plugs	
Lifting Point	3 x Threaded holes with lifting eye	4 x Threaded holes - 3 x Lifting eye fitted	

1.4. Nameplate Details

Items supplied vary according to product configuration.
Make sure that the items supplied and the information on the nameplate correspond to the order confirmation.

1.4.1 Standard Nameplate

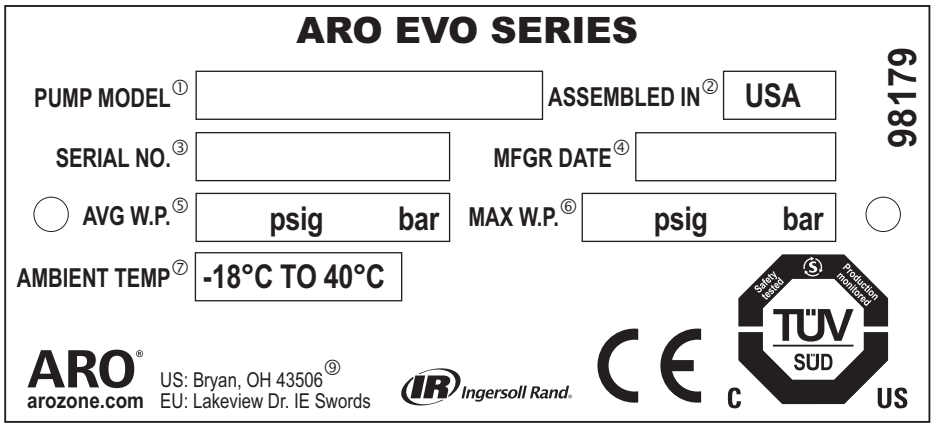

1.4.2 Hazardous Nameplate

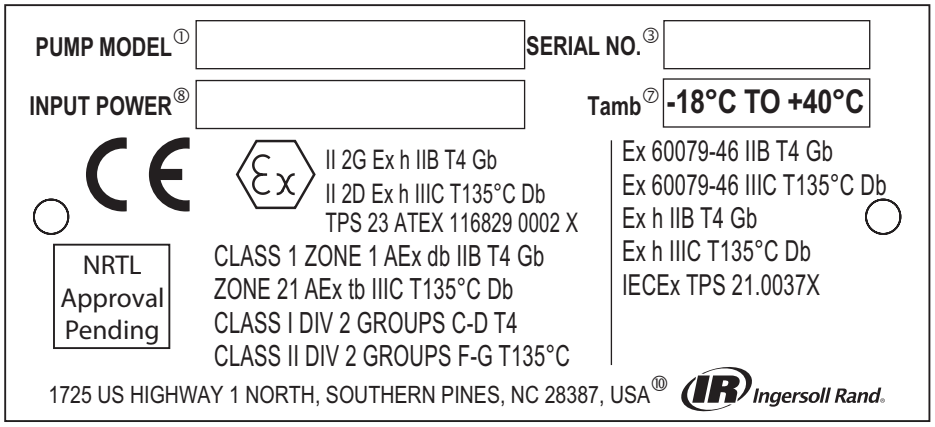

Definitions
1. Pump Model - Configured Pump Model Number
2. Assembled In - Country of Assembly
3. Serial Number - Serial Identification Number (Includes Date of Manufacture - Month, Day, Year)
4. MGFR Date - Date of Manufacture
5. AVG W.P - Average Pump Working Pressure (Occurs at or near deadhead)
6. Max W.P. - Maximum Pump Working Pressure
7. Ambient Temp - Allowable Ambient Temperature Range
8. Input Power - Allowable input power for VFD
9. Customer service contact locations
   USA: 209 N. Main Street, Bryan, OH 43506
   EU: 165 Lakeview Drive, Swords, Ireland
10. Manufacturing location, USA: 1725 US Highway 1 North, Southern Pines, NC 28387

Serial Number Identification

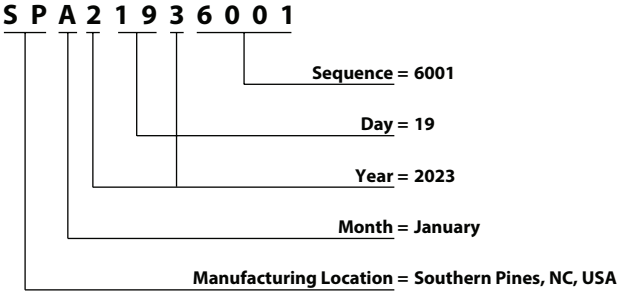

Code	Month
A	JAN
B	FEB
C	MAR
D	APR
E	MAY
F	JUN
G	JUL
H	AUG
I	SEP
J	OCT
K	NOV
L	DEC

• Viton® is a registered trademarks of the Chemours Company • Loctite® is a registered trademark of Henkel Corporation •
• Santoprene® is a registered trademark of Celanese • ARO® is a registered trademark of Ingersoll-Rand Company •

2. MODEL DESCRIPTION CHART

2.1. Model Code Explanation

EP10 - X X X X X - X X X - X X X

Wetted Parts
- E - Conductive Polypropylene
- P - Polypropylene

Port
- F - ANSI / DIN Hybrid Flange

Seat
- H - 440 SST
- P - Polypropylene
- S - 316 SST

Ball
- A - Santoprene®
- S - 316 SST
- T - PTFE
- V - Viton®

Diaphragms
- A - Santoprene®
- T - PTFE

Pump Crank case
- C - Cast Iron

Pump Input Shaft
- S - Integrated Spline Shaft

Bellows
- V - Viton®

Motor
- 0 - No Motor
- A - Ordinary Location Motor
- B - Hazardous Location Motor (IECEx, ATEX, NEC, CEC)
- C - Hazardous Location Motor (IECEx and ATEX Only)

VFD Options
- 0 - None
- A - 200 - 240V, 50/60 Hz, Ordinary Drive
- B - 200 - 240V, 50/60 Hz, Hazardous Drive
- C - 380 - 500V, 50/60 Hz, Ordinary Drive
- D - 380 - 500V, 50/60 Hz, Hazardous Drive
- E - 525 - 600V, 50/60 Hz, Ordinary Drive
- F - 525 - 600V, 50/60 Hz, Hazardous Drive

Revision
- A - Revision

Special Testing

Pumps requiring special tests will have a separate line item on the Purchase Order

NOTICE: All possible options are shown in the chart, however, certain combinations may not be recommended. Consult a representative or the factory if you have questions concerning availability.

2.2. Encoder Cable Assembly for Ordinary Motors

Each pump with an ordinary location motor comes with a 9 meter encoder cable assembly. Alternate encoder cable assembly lengths are available through aftermarket.

This shielded cable assembly connects to the 12-pin encoder connector on the motor and the MCB 102 encoder card in the VFD. For installation instructions, see section 6.5.3.

Part Number (PN)	Description	Availability
67561-003	Ordinary Motor Encoder Cable Assembly (3 m)	Aftermarket
67561-006	Ordinary Motor Encoder Cable Assembly (6 m)	Aftermarket
67561-009	Ordinary Motor Encoder Cable Assembly (9 m)	Standard - Included with each ordinary location pump
67561-015	Ordinary Motor Encoder Cable Assembly (15 m)	Aftermarket
67561-050	Ordinary Motor Encoder Cable Assembly (50 m)	Aftermarket
67561-100	Ordinary Motor Encoder Cable Assembly (100 m)	Aftermarket

3. OPERATING AND SAFETY PRECAUTIONS

READ, UNDERSTAND, AND FOLLOW THIS INFORMATION TO AVOID INJURY AND PROPERTY DAMAGE.



⚠ WARNING STATIC SPARK. Can cause explosion resulting in severe injury or death. Ground pump and pumping system.

- Sparks can ignite flammable material and vapors.
- The pumping system and object being sprayed must be grounded when it is pumping, flushing, recirculating or spraying flammable materials such as paints, solvents, lacquers, etc. or used in a location where surrounding atmosphere is conducive to spontaneous combustion. Ground the dispensing valve or device, containers, hoses and any object to which material is being pumped.
- Secure pump, connections and all contact points to avoid vibration and generation of contact or static spark.
- Consult local building codes and electrical codes for specific grounding requirements.
- After grounding, periodically verify continuity of electrical path to ground. Test with an ohmmeter from each component (e.g., hoses, pump, clamps, container, spray gun, etc.) to ground to ensure continuity. Ohmmeter should show 0.1 ohms or less.
- Submerse the outlet hose end, dispensing valve or device in the material being dispensed if possible. (Avoid free streaming of material being dispensed.)
- Use hoses incorporating a static wire.
- Use proper ventilation.
- Keep inflammables away from heat, open flames and sparks.
- Keep containers closed when not in use.

⚠ WARNING Excessive fluid pressure developed by pump can cause personal injury, pump damage or property damage.

- Fluid pressure developed by the pump do not exceed the maximum as stated on the pump model plate.
- Be sure material hoses and other components are able to withstand fluid pressures developed by this pump. Check all hoses for damage or wear. Be certain dispensing device is clean and in proper working condition.

⚠ WARNING INSTALLATION OF ELECTRICAL COMPONENTS FOR HAZARDOUS DUTY APPLICATIONS.

- Pumps that will operate in environments defined as "hazardous locations" must only be installed, connected and set-up by qualified personnel with knowledge and understanding of protection classes, regulations and provisions for apparatus in hazardous areas, for the region where the pump will operate, because these regulations and provisions, along with the definition of what constitutes hazardous areas vary by location.

⚠ WARNING ELECTRIC SHOCK HAZARD. This equipment must be grounded. Improper grounding, setup, or usage of the system can cause electric shock.

- Turn off and remove power before disconnecting any cables and before servicing or installing equipment.
- Connect only to grounded power source.
- All electrical wiring must be done by a qualified electrician and comply with all local codes and regulations. For North America hazardous locations (NEC/CEC), ensure wiring is done by a qualified and certified electrician according to NFPA 70 and CSA C22.1. Installation personnel should meet IEC 60079-14 Annex A for knowledge, skills and competencies of responsible persons, operators, technicians and designers.
- The knowledge, skills and competences for maintenance and inspection personnel must comply with IEC 60079-17.
- The knowledge, skills and competences for repair and overhaul personnel must comply with IEC 60079-19.
- Refer to VFD label and manual for minimum capacitor discharge time prior to any service.

⚠ WARNING HAZARDOUS PRESSURE. Can result in serious injury or property damage. Do not service or clean pump, hoses or dispensing valve while the system is pressurized.

- Disconnect and lockout / tagout power supply to electric motor and VFD. Relieve pressure from the system by opening dispensing valve or device and / or carefully and slowly loosening and removing outlet hose or piping from pump.

⚠ WARNING HAZARDOUS MATERIALS. Can cause serious injury or property damage. Do not attempt to return a pump to the factory or service center that contains hazardous material. Safe handling practices must comply with local and national laws and safety code requirements.

- Obtain Material Safety Data Sheets on all materials from the supplier for proper handling instructions.

⚠ WARNING EXPLOSION HAZARD. Models containing aluminum wetted parts cannot be used with 1-1-1 -Trichloroethane,Methylene Chloride or other Halogenated Hydrocarbon solvents which may react and explode.

- Check pump crankcase section, PRV section, Oil module section, fluid caps, manifolds and all wetted parts to assure compatibility before using with solvents of this type.

⚠ WARNING MISAPPLICATION HAZARD. Do not use models containing aluminum wetted parts with food products for human consumption. Plated parts can contain trace amounts of lead.

⚠ CAUTION Verify the chemical compatibility of the pump wetted parts and the substance being pumped, flushed or recirculated. Chemical compatibility may change with temperature and concentration of the chemical(s) within the substances being pumped, flushed or circulated. For specific fluid compatibility, consult the chemical manufacturer.

⚠ CAUTION HOT SURFACE. Metallic wetted sections can reach up to the same temperature as the fluid temperature (up to 79°C). Precautions should be taken to restrict access to hot surfaces when needed. Proper personal protective equipment (PPE) for hot surfaces should be worn. Check to ensure parts have cooled down sufficiently prior to any maintenance.

⚠ CAUTION **Maximum temperatures are based on mechanical stress only. Certain chemicals will significantly reduce maximum safe operating temperature. Consult the chemical manufacturer for chemical compatibility and temperature limits. Refer to PUMP DATA on page 3 of this manual.**

⚠ CAUTION **Be certain all operators of this equipment have been trained for safe working practices, understand it's limitations, and wear safety goggles / equipment when required.**

⚠ CAUTION **Do not use the pump for the structural support of the piping system. Be certain the system components are properly supported to prevent stress on the pump parts.**

- **Suction and discharge connections should be flexible connections (such as hose), not rigid piped, and should be compatible with the substance being pumped.**

⚠ CAUTION **Prevent unnecessary damage to the pump. Do not allow pump to operate when out of material for long periods of time.**

- **Disconnect power supply from motor when system sits idle for long period of time.**

⚠ CAUTION **Use only genuine ARO replacement parts to assure compatible pressure rating and longest service life.**

NOTICE **TORQUE ALL FASTENERS BEFORE OPERATION. Creep of housing and gasket materials may cause fasteners to loosen. Torque all fasteners to ensure against fluid or air leakage.**

⚠ WARNING	**= Hazards or unsafe practices which could result in severe personal injury, death or substantial property damage.**
⚠ CAUTION	**= Hazards or unsafe practices which could result in minor personal injury, product or property damage.**
NOTICE	**= Important installation, operation or maintenance information.**

4. GENERAL DESCRIPTION

4.1. Introduction

The EVO Series electric diaphragm pump offers a unique combination of benefits in the positive displacement pump market. It features a broad range of material compatibility options, high volume delivery, secondary containment, the ability to fully deadhead, and is efficient and intelligent. The pump works on the principle of converting rotary motion from an AC induction motor to linear reciprocating motion to drive a diaphragm. The motor is coupled directly to a rotating eccentric crankshaft to drive connecting rods and pistons which in turn drive three independent diaphragms. Three diaphragms are used to ensure reduced pulsation and noise for smoother and more reliable flow. Pump cycling will begin as a commanded speed is supplied to the variable frequency drive (VFD). As back pressure builds, the pump will reduce speed until maximum line pressure is reached (dispensing device closed). The pump will resume flow as back pressure is relieved.

4.2. Storage

Place the equipment in a clean dry area, protected from impacts, vibrations, temperature extremes and in an environment with relative humidity less than 90%.
When storing for longer than six months, consult the manufacturer.

4.3. Unpacking

Items supplied vary according to product configuration.
Make sure that the items supplied and the information on the nameplate correspond to the order confirmation.
Check the individual packaging and the product visually for damage caused by inappropriate handling during shipment.
NOTE: In-case of damage, report the damage to the transport company and thereafter contact IR distributor.

NOTICE

To protect consumer rights please keep the Label intact on the Motor, Pump and Drive.

5.1. Pump and Motor Installation

⚠ WARNING ***Pump and motors are industrial products. They must therefore be installed by qualified, experienced and authorized personnel. The safety of people, animals and property must be ensured when fitting the motors into pump.***

⚠ CAUTION ***Prior to commissioning for all motors, rotate the motor at no load (no mechanical load) for 2 to 5 minutes, checking that there is no abnormal noise. If there is any abnormal noise, see section 5 on motor manual (Page 18).***

⚠ WARNING ***Before starting the motor, it is advisable to check the insulation between the phases and earth, and between phases.***

Once Pump has been fully unpackaged and inspected, use lifting points on Crankcase to move into final operating position (See Figure. 2).

- Ensure straps and lifting device are properly rated. Refer section 1.1 for pump weight.
- All three lifting points should be used for stability.
- Lifting points on Crankcase are intended to only move the pump.
- Do not use pump Manifolds to lift the equipment.
- Ensure installation location has enough overhead room to install motor vertically from above.
- Ensure adequate clearance around pump for sufficient access and ventilation.
- Ensure the pump is installed on flat level surface.

Secure pump legs to floor with M14 anchors.

- Refer to section 13.1 for bolt circle spacing.
- Pump must be positioned such that fluid inlet and fluid outlet port are easily accessible.

Install motor onto the pump crank case.

- Ensure gearbox motor does not damage pump Manifolds.
- Refer to electric motor manual for lifting points and recommendations.
- Ensure motor is vertical with shaft pointing downward when mounting to the pump.
- Ensure pump Crankshaft is greased from factory.
- Motor should be carefully lowered while gently rotating back and forth to ensure proper engagement of spline interface. Ensure motor is aligned vertically. Do not apply excessive force on the pump input Crankshaft. Spline interface will fit together easily with proper alignment.

Secure gearbox flange to Crankcase flange with 4X M10 (192) bolts.

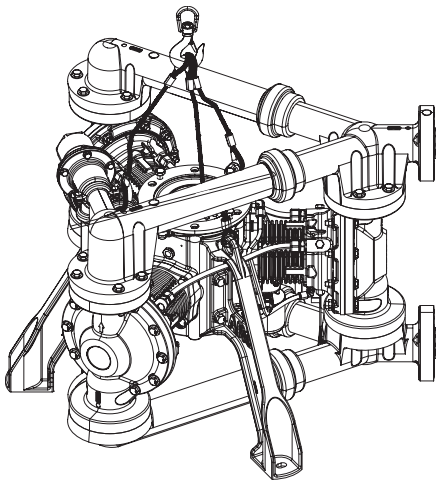

Figure 2

5.2. Pump and Gearbox Breather Installation

Once the motor is in place, the oil breather will need to be installed in the upper cap of the pump Crankcase.

- The pump Crankcase will come pre-filled with oil.
- Remove temporary shipping plug (orange) from the breather port in upper cap of the Crankcase housing.
- Remove the plastic elbow (127) and breather (126) secured to one of the pump legs.
- Install the plastic elbow until NPT connection is 1-2 turns from hand-tight with the outlet of the elbow pointing upwards.
- Install breather onto elbow such that it is in the vertical orientation.

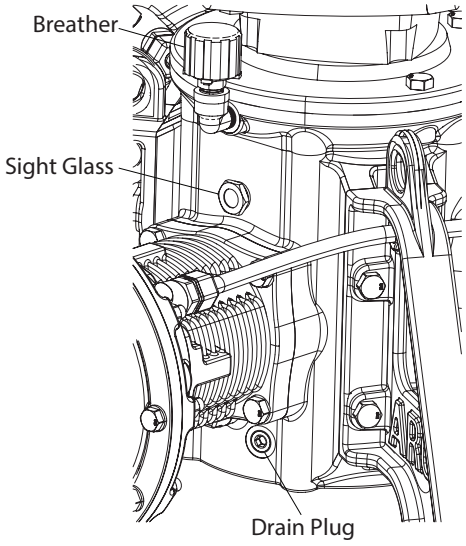

Figure 3

The ordinary motor gearbox will also need to have a breather installed after installation to the pump.

- Remove the temporary metallic plug from breather port.
- Locate breather supplied in plastic bag secured to gearbox lifting lug.
- Install breather onto gearbox.

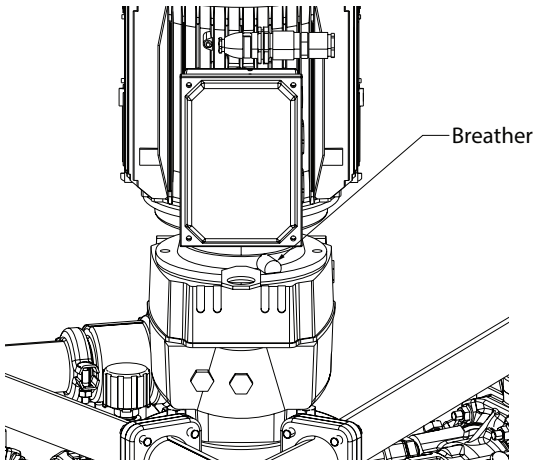

Figure 4

The hazardous motor gearbox will require the installation of an oil expansion tank.

- Remove the temporary shipping plug from breather port.
- Locate the oil expansion tank supplied with the gearmotor.
- Install expansion tank in breather port securing threads with Loctite thread locker or Omnifit 100M.
- Remove the upper cap from the expansion tank and loosen the air venting port.
- Use the 1 liter container of oil supplied with the gearmotor to adjust the oil level between the two marks on the dip stick.
- Replace the cap on the oil expansion tank and retighten the air vent port.

WARNING: Regularly check the oil level (once a week) for hazardous location applications.

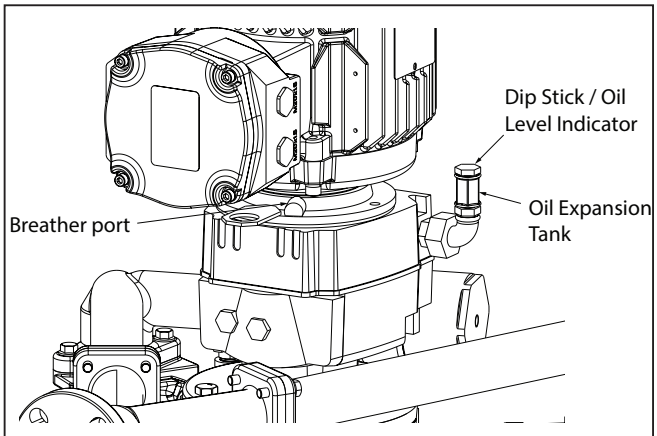

Figure 5

5.3. VFD Mechanical installation

- Refer to section 3 of VFD manual for detailed mechanical installation.
- Do not remove the nameplate from the drive.
- Ensure that the lifting device is suitable for the task.
- Mount drive to a flat vertical surface or ensure back plate is installed to allow adequate air flow across cooling fins.
- Refer to section 13.2 for VFD mounting dimension.

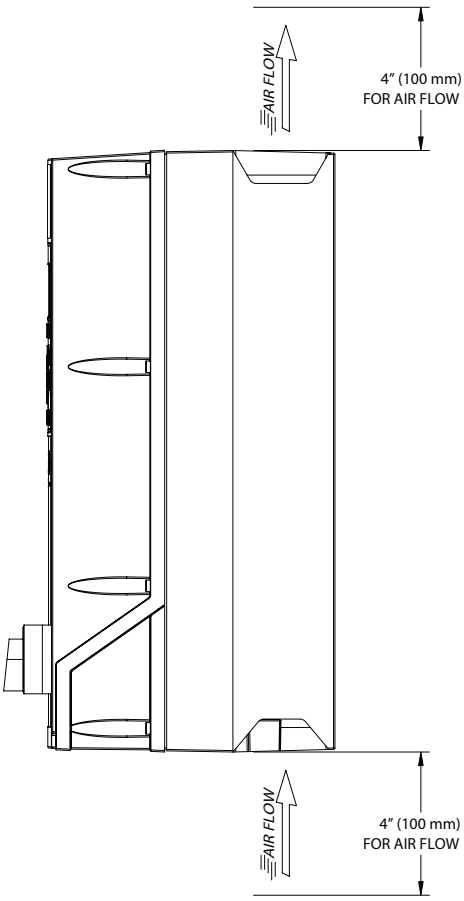

Figure 6

Accessory Option: Stainless Steel Backplate for use when the VFD cannot be mounted directly to a flat surface for proper cooling. See section 1.2 to confirm VFD frame size.

- A5 Frame Size: PN 130B3242

6.1. VFD-Wiring Diagram

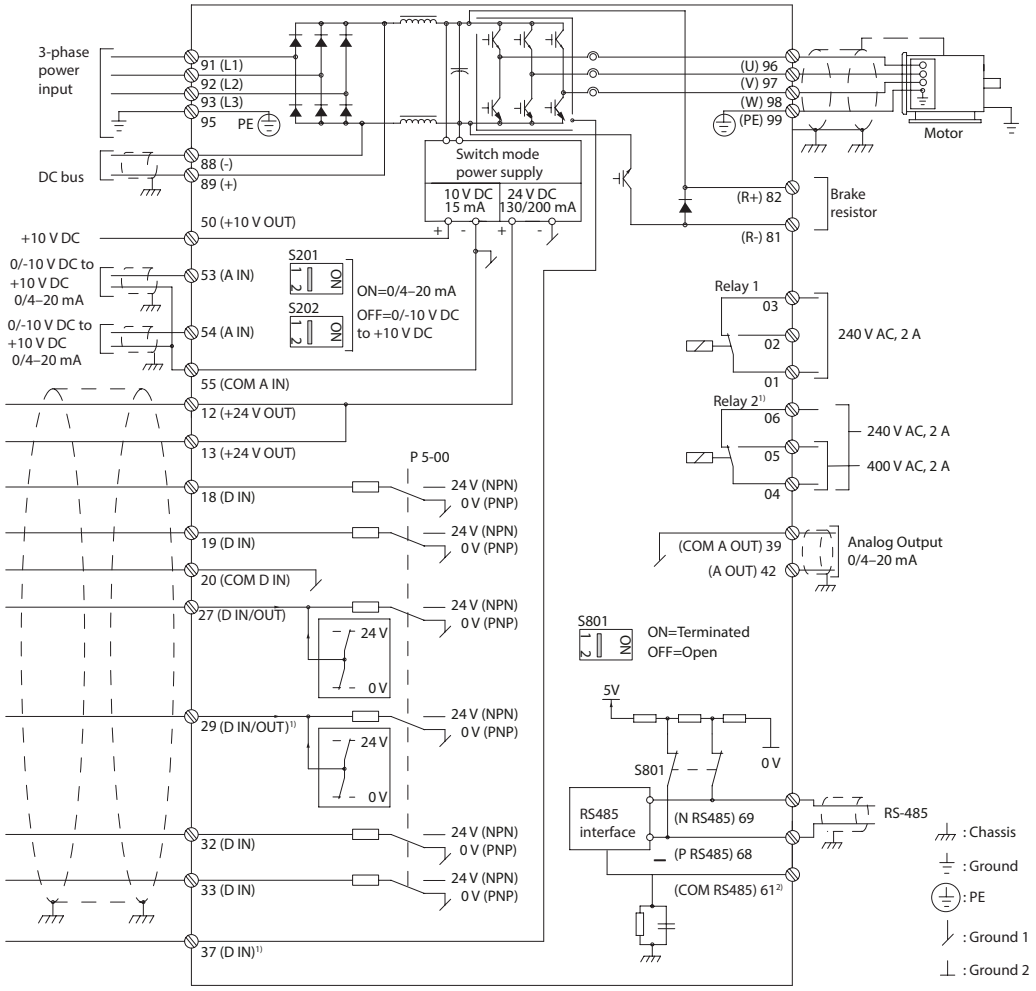

A	Analog	1	Terminal 37 (optional) is used for Safe Torque Off (STO).
D	Digital	2	Do not connect cable shield.

6.2. General Wiring Practice for VFD

- Due to limited number of knockouts in VFD, it is recommended to combine signal wires (Safe Stop cable, Leak detector cable, Thermistor cable) into a single cable.
- Route control wiring in separate conduit and as far away from power wires as possible.
- A dedicated ground wire is needed, It is not recommended grounding through the conduit.
- Keep wire runs as short as possible to help avoid problems.

Recommended VFD Cable Entry Positions (A5 Frame Size)

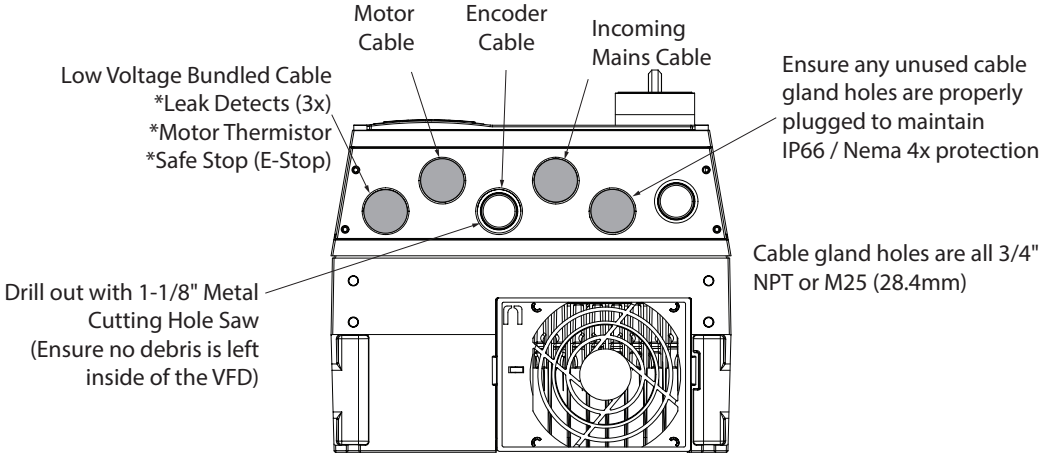

NOTE: Knockouts shaded in gray are already pre-drilled as the VFD comes from the factory.

Figure 7

6.3. VFD AC Mains – Input Power Requirements:

Supply terminals (6-pulse)	L1, L2, L3
Supply voltage[1][2]	200 – 240V +/- 10% , 380 – 500 V +/- 10%, or 525-600V +/- 10%
Supply frequency	47.5 – 63 Hz
Maximum imbalance temporary between mains phases	3.0% of rated supply voltage
True power factor (λ)	≥ 0.9 nominal at rated load
Displacement power factor (cos Φ)	Near unity (> 0.98)
Switching on the input supply L1, L2, L3 (power - ups) ≤ 7.5 kW (10 hp)	Maximum twice per minute

1. Mains voltage low/mains dropout: During low mains voltage or a mains dropout, the drive continues until the DC-link voltage drops below the minimum stop level, which typically corresponds to 15% below the drive's lowest rated supply voltage. Power-up and full torque cannot be expected at mains voltage lower than 10% below the drive's lowest rated supply voltage.

2. The unit is suitable for use on a circuit capable of delivering not more than 100,000 RMS symmetrical Amperes, 240/500/600 V maximum.

6.4. Power Wiring

6.4.1 VFD - Input Power Wiring

- Size the wiring based on the input current of the drive (see page 3). For maximum cable cross-sections, see the table below (from VFD manual, table 8.1.4).
- Comply with local and national electrical codes for cable sizes.
- Cable glands should be selected to match the cable diameter and to maintain the IP / Nema rating of the VFD.
- Connect the 3-phase AC input power wiring to terminals L1, L2, and L3.
- Ground the cable in accordance with the grounding instructions, see 4.3 Grounding and 4.5.1 Grounding the Cable Shield in VFD manual.
- When supplied from an isolated mains source (IT mains or floating delta) or TT / TN-S mains with a grounded leg (grounded delta), ensure that parameter 14-50 RFI Filter is set to [0] Off. This setting prevents damage to the DC link and reduces ground capacity currents in accordance with IEC 61800-3.

Power Cable Cross Sections Maximum cable cross section (mm^2 [AWG])		
Enclosure	**Mains**	**Motor**
A5	4 (12)	4 (12)

6.4.2. VFD - Output Motor Wiring

- Use shielded cables.
- Size the wiring based on the full load current of the motor (see motor nameplate). For maximum cable cross-sections, see the table above (from VFD manual, table 8.1.4).
- Cable glands should be selected to match the cable diameter and to maintain the IP/Nema rating of the VFD.
- Comply with local and national electrical codes for cable sizes.
- Strip a section of the outer cable insulation.
- Position the stripped wire under the cable clamp to establish mechanical fixation and electrical contact between the cable shield and ground.
- Connect the ground wire to the nearest grounding terminal in accordance with the grounding instructions, Refer to section 7.2 for Grounding.
- Connect the 3-phase motor wiring to terminals 96 (U), 97 (V), and 98 (W).
- Do not wire a starting or pole-changing device (for example a Dahlander motor or slip ring asynchronous motor) between the drive and the motor.
- Ensure 2 Phases are inverted between the VFD and the motor (as shown by schematic below) to ensure proper rotation direction of the motor. If motor direction is not wired correctly, VFD Alarm 61 (Feedback Error) will trip at startup. If this occurs, swap any two phases, reset the alarm and restart the motor.

400V Wye Wiring Schematic
(For use with 380 - 500V or 525 - 600V VFD)

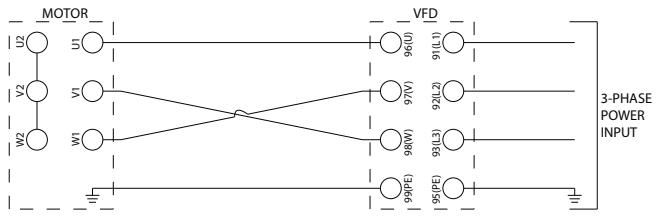

230V Delta Wiring Schematic
(For use with 200 - 240V VFD)

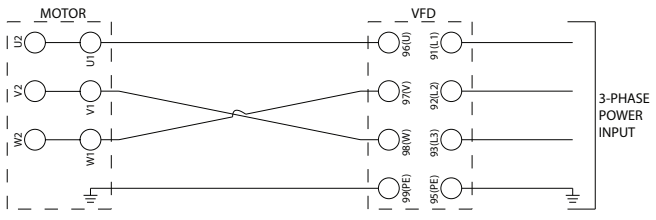

6.4.3. Motor - Input Power Wiring

- The cables must be fitted with connectors suitable for the cable cross-section and the terminal diameter.
- They must be crimped in accordance with the connector supplier's instructions.
- If using cables without connectors, attach some calipers.
- If any nuts on the brass terminal block are lost, they must be replaced by brass nuts, not steel ones.
- When closing the box, ensure that the seal is correctly positioned.
- Cable glands should be selected to match the cable diameter and to maintain the IP rating of the motor.
- Motor should be wired with shorting tabs in the DELTA configuration when used with 200-240V VFD, and should be wired with shorting tabs in the WYE configuration when used with the 380-500V or 525-600V VFD options. See wiring schematic above.

Type of cable gland	Ø min. - Ø max. (mm) cable	
Steel	Polyamide cable gland	Brass cable gland
ISO M16	5-10	5.5-9.5
ISO M20	9.5-15	8.5-13
ISO M25	13-19	12-17

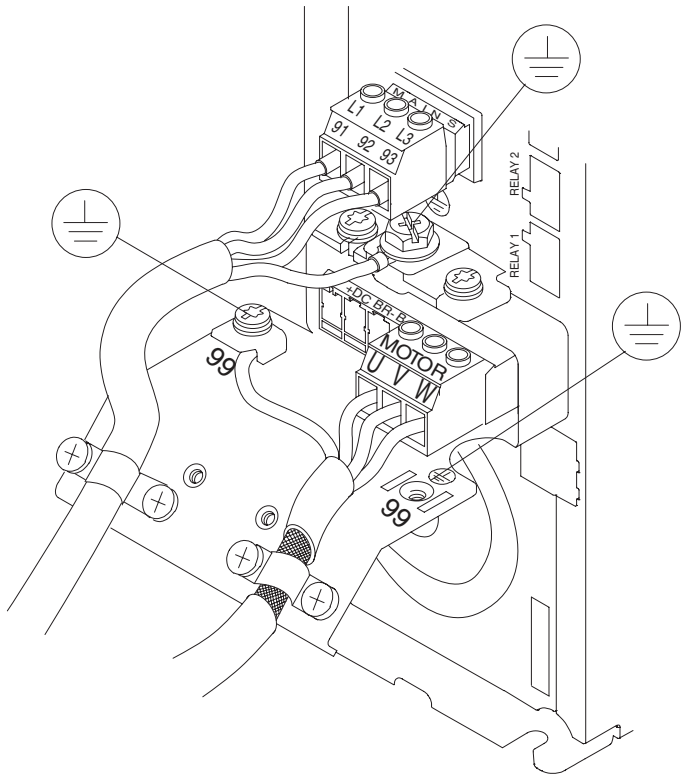

Mains input, motor, and grounding for basic drives. Actual configurations vary with unit types and optional equipment.

Figure 8

6.5. Control Wiring (Required)

6.5.1. Leak detector wiring diagram

General Description:

An ARO Diaphragm pump equipped with the ARO Leak Detection Sensor warns of a Diaphragm failure by sensing the presence of liquid in the air cap of the pump. This system uses a liquid sensor in each of the three air caps which will send an output signal to the VFD to shut down the motor when fluid is detected.

Installation and Warnings:

NOTE: All WIRING MUST COMPLY WITH ALL LOCAL AND / OR NATIONAL ELECTRICAL CODES.

- The Leak Detection Sensor components must be installed by a qualified electrician in compliance with all national, state and local codes and regulations to reduce the risk of electrical shock or other serious injury during installation and operation.
- Some local electrical codes may require the installation of rigid conduit.
- ARO is not responsible for accidents resulting from improper installation of components or hardware.
- Do not attempt any service without disconnecting all electrical supply source.

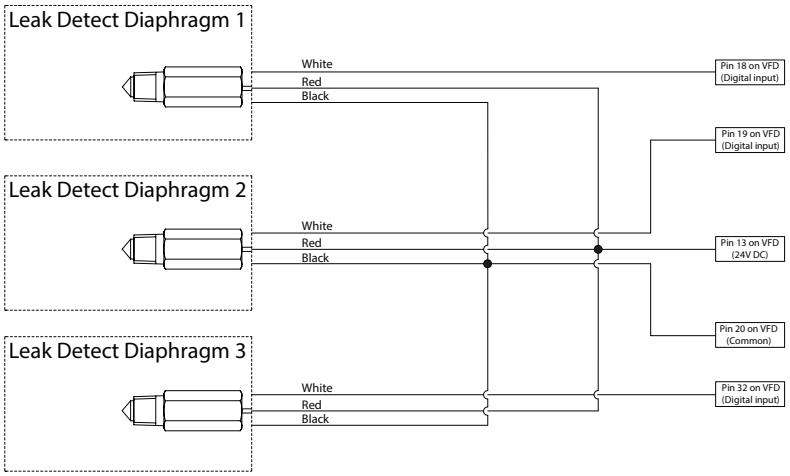

Leak Detection Sensor PN	Voltage	Device Rating (mA)	Temperature Rating
96270-2 (ATEX / IECEx / NEC / CEC)	24 VDC	40	-0°F - 176°F (-18°C - 80°C)

NOTE: The same leak detection sensor is used for both ordinary and hazardous applications.

- The Leak Detection Sensor comes with 2m of cable length with flying lead connections. It is recommended to combine leak sensor cables into a single low voltage cable bundle to send to the VFD.
- It is also recommended to install the leak detects as shown below to keep track of which leak detect corresponds to each Diaphragm as the VFD will indicate which leak detect has tripped. Leak detect #1 would correspond with the lowest cylinder with the signal wire tied to digital input 18 of the VFD.

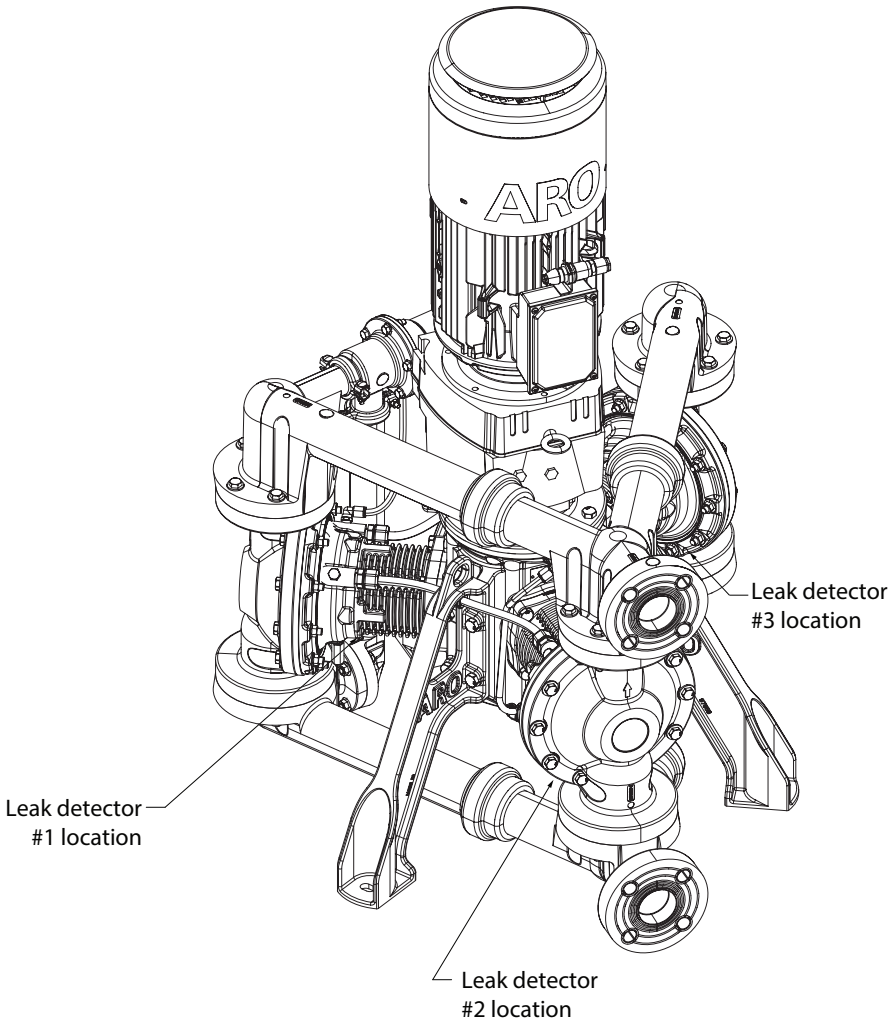

Figure 9

6.5.2. Thermal protection – Ordinary motor

- Motor is installed with 2 normally closed contact sensors (PTO) in series for ordinary motors and will need to be wired from the motor terminal box to the VFD as per below wiring diagram. Cable extension and cable glands are not provided.
- It is recommended to use the M16 cable gland on the motor terminal box for the PTO control cable.

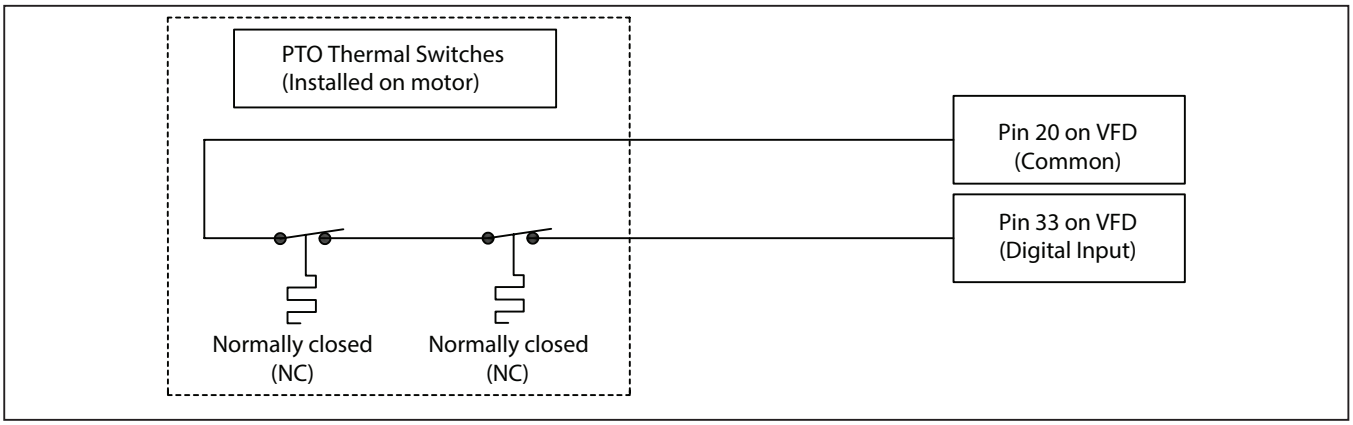

6.5.3. Encoder Wiring – Ordinary Motor

- Motor is installed with a 1024 pts TTL encoder with a 12-pin connector on the outside of the motor terminal box.
- Each ordinary location pump comes with a 9 meter encoder extension cable with a soldered 12-pin connector (PN 67561-009). Alternate encoder cable assembly lengths are available through aftermarket (see page 7).
- Flying leads need to be wired to the MCB102 encoder card installed in the option B slot of the VFD as per encoder card wiring details shown below.

NOTE: The encoder cable will have either a green or black outer jacket.

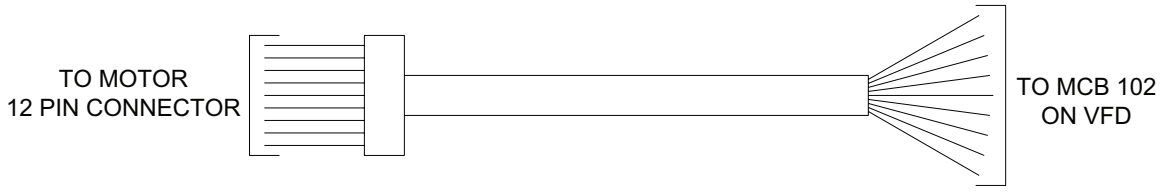

VFD Encoder Card Connections:

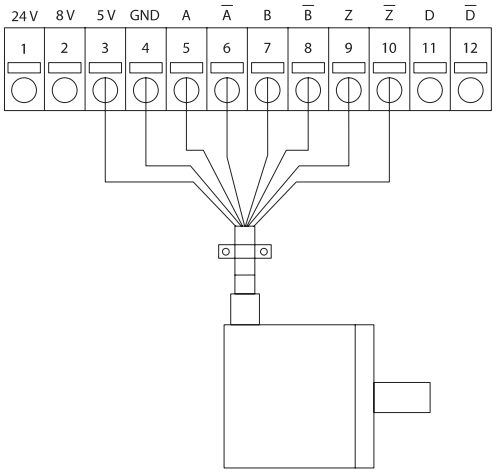

Individual Wire Colors (Black Outer Jacket)	Individual Wire Colors (Green Outer Jacket)	Description	Encoder Card Terminal
Red / White	Brown	5V	(3)
Blue / White	White	GND	(4)
Yellow	Yellow	A Input	(5)
Green	Green	A Inv Input	(6)
Red	Pink	B Input	(7)
Orange	Grey	B Inv Input	(8)
Blue	Blue	C or Z Input	(9)
Purple	Red	C Inv or Z inv Input	(10)
N/A	Green / Yellow	Shield	N/A

NOTE: Ensure the cable shielding is grounded to the VFD frame.

It is highly recommended to use the ARO encoder cable assembly to minimize the chance of installation issues. For customers who wish to build their own encoder cable assembly, please reach out to your ARO representative for additional details regarding the required cable type and the pin-out descriptions of the 12 pin connector.

6.6. Control Wiring (Recommended)

6.6.1. Safe Stop wiring diagram

- It is recommended to install an external Emergency Stop (Safe Stop). Referred to in VFD manual as Safe Torque Off (STO).
- The VFD will come with pin 37 (E-stop digital input) wired to 24V (pin 12 or 13). This jumper will need to be removed when the E-stop is installed.
- The E-Stop should be mechanically latching and normally closed. The pump will only run when 24V is supplied to pin 37. An open circuit will stop the pump.

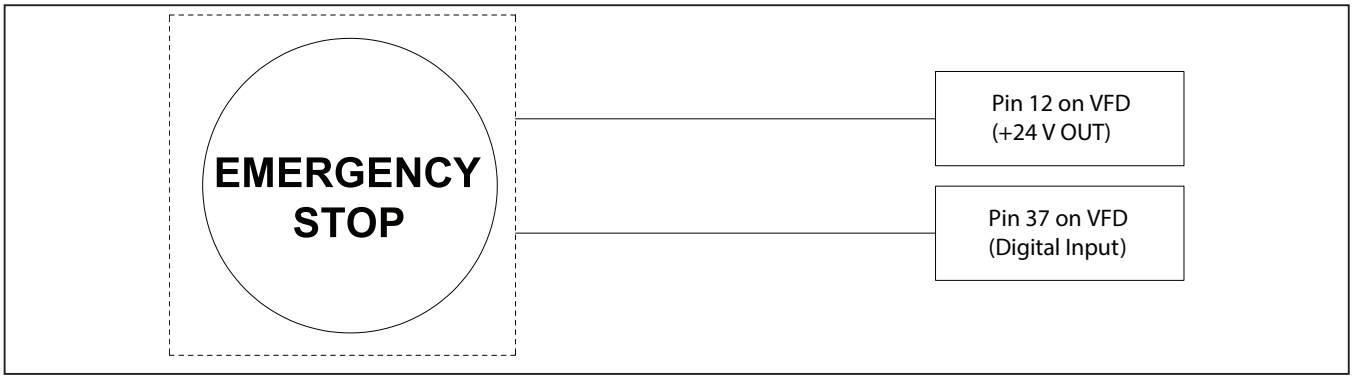

6.7. Control Wiring (Optional)

6.7.1. Digital start/ stop control

- If the VFD is run using analog or digital control methods in the "Auto On" mode, then a Start / Stop command will be required to run.
- To configure the VFD for a digital Start/Stop command, install a switch between pin 20 (common) and digital input 27 or 29.
- Update VFD parameter 512 or 513 respectively to "[8] Start".
- Additionally, a digital reset command can be used with the same procedure on a different digital input with the VFD parameter set to "[1] Reset" instead.

NOTE: Terminal pins 27 and 29 are available to be configured for any digital input or output. By default these are both configured to "Input" per VFD parameters 501 and 502. Note that all digital inputs are configured for NPN.

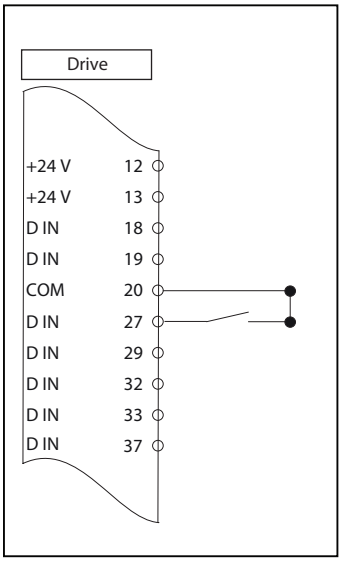

VFD Parameter	Function	Setting
512	Terminal 27 digital input	[8] Start
513	Terminal 29 digital input	[1] Reset

6.7.2. Analog Input – Speed control

- A 0 - 10 V or 4 - 20 mA signal can be used to control VFD speed from 0 - 100% using analog input 53.
- The VFD is set to receive a 0-10 V input signal as configured from the factory. To change to 4-20 mA input signal, toggle the A53 switch from "U" to "I" inside the VFD.
- The analog speed control function will only work in "Auto On" mode. Additionally, it requires a digital "Start" command to run (see previous section).

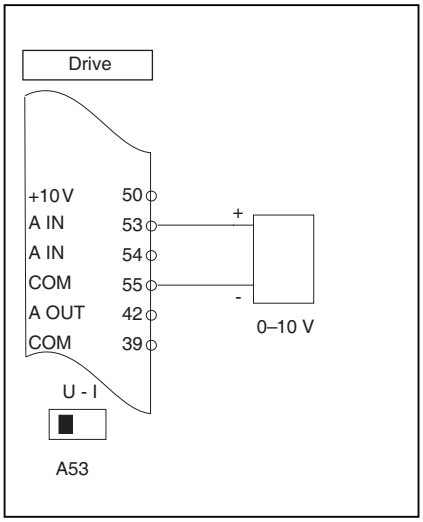

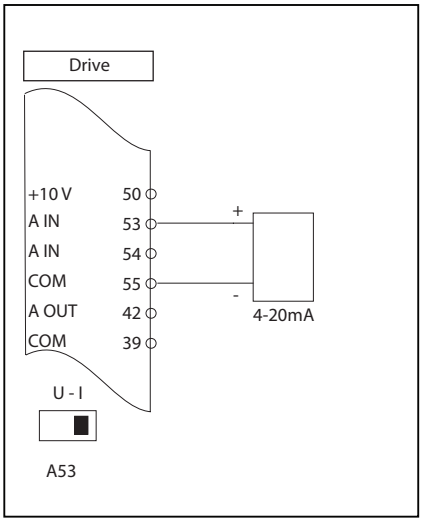

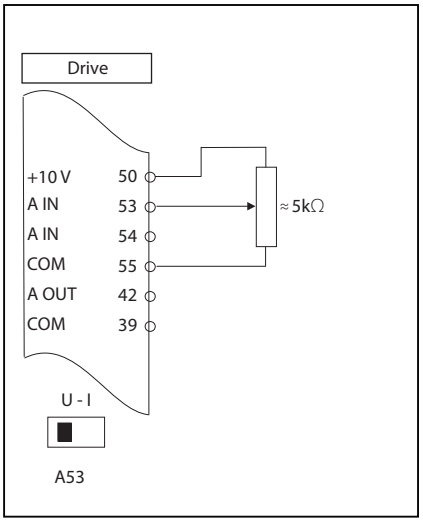

VFD Parameter	Description	Default Parameter
610	Terminal 53 Low Voltage	0.07 V
611	Terminal 53 High Voltage	10.00 V
612	Terminal 53 Low Current	4 mA
613	Terminal 53 High Current	20 mA

6.7.3. Analog Inputs – Torque (Pressure) Control

- A 0 - 10 V or 4 - 20 mA signal can also be used to control the VFD torque limit setting (parameter 416) from 0 - 100% using analog input 54. The same wiring schematics from section 6.7.2 apply with the only difference being the use of analog input 54.
- The VFD is set to receive a 0 - 10 V input signal as configured from the factory. To change to 4 - 20 mA input signal, toggle the A54 switch to "U" to "I" inside the VFD.
- To enable torque limit control via the analog 54 input, change VFD parameter 420 (Torque Limit Factor Source) from "[0] No Function" to "[6] Analog in 54".

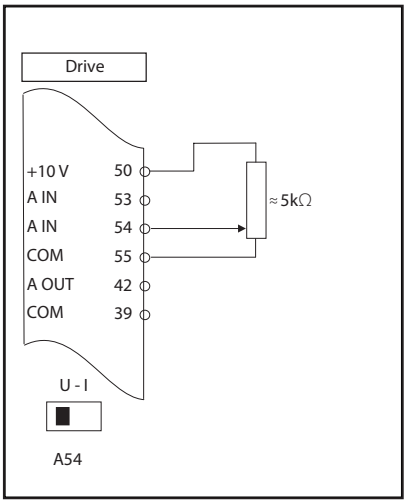

NOTE: Once parameter 420 is set to "[6] Analog in 54", this will be the source of the torque limit setting whether the VFD is in "Hand On" or "Auto On" mode. The pump will not operate if there is no signal on A54 or if the signal is too low.

VFD Parameter	Description	Default Parameter	New Setting
420	Torque Limit Factor Source	[0] No Function	[6] Analog in 54
620	Terminal 54 Low Voltage	0.07 V	----
621	Terminal 54 High Voltage	10.00 V	----
622	Terminal 54 Low Current	4.00 mA	----
623	Terminal 54 High Current	20.00 mA	----

6.7.4. Additional available Input/output (Optional)

1. T27 and T29 are configurable for digital input or output.
   - Digital output can be either digital or pulse output. The options for parameters 530 and 531 are all digital, however, to enable pulse output the parameters in the table below should be set as shown. The pulse output variable can then be selected using parameters 560 and 563.

VFD Parameter	Function	Setting
501	Terminal 27 mode	[1] Output
502	Terminal 29 mode	[1] Output
530	Terminal 27 Digital Output	[55] Pulse Output
531	Terminal 29 Digital Output	[55] Pulse Output
560	Terminal 27 Pulse Output Variable	Select output variable to display from the list
552	Pulse Output Max Freq #27	5000 (default)
563	Terminal 29 Pulse Output Variable	Select output variable to display from the list
555	Pulse Output Max Freq #29	5000 (default)

2. T42 analog output
   - Refer to Personal menu table (650, 651 and 652) to set parameter in VFD for this terminal.
3. Relays
   - Two relays are available for use (Parameter 540).
   - Refer to section 8.6.11 (page – 69) in VFD manual for detailed relay information.

6.8. Configured Input / Output Summary - Ordinary

Intended function	Alarm	Digital I/O Terminal	Ground Terminal	24VDC Terminal
Diaphragm 1 Leak Detect	AA1 - Diaphragm 1 Leak	18	20, 39 or 55	12 or 13
Diaphragm 2 Leak Detect	AA2 - Diaphragm 2 Leak	19	20, 39 or 55	12 or 13
Diaphragm 3 Leak Detect	AA3 - Diaphragm 3 Leak	32	20, 39 or 55	12 or 13
PTO (normally closed) - Ordinary pump only	Alarm 11	33	20, 39 or 55	N / A
Safe Stop (E Stop)	Alarm 68	37	N / A	12 or 13
User Configurable I/O		27	20, 39 or 55	N / A
User Configurable I/O		29	20, 39 or 55	N / A
		Analog In Terminal	**Ground Terminal**	**10VDC Terminal**
Speed Control		53	20, 39 or 55	50
Torque Control		54	20, 39 or 55	50
		Analog Out Terminal		
User Configurable Output		42	20, 39 or 55	N / A

6.9. VFD serial communication

1. Drive will have RS485 serial communication port.
   - Connect RS485 serial communication wiring to terminals (+) 68 and (-) 69.
2. Connect RS485 serial communication wiring to terminals (+) 68 and (-) 69.
3. Drive will support Modbus RTU field communication.
4. Set the below parameter for serial communication set-up.

VFD Parameter	Function
8-30	Select Option [2] for Modbus RTU. Changing parameter is not effective until after powering off frequency converter.
8-31	Enter the valid address for the frequency converter (standard) port. e.g. [1-247]
8-32	Select option for the Baud rate match with FC (standard) port.
531	Terminal 29 Digital Output
560	Terminal 27 Pulse Output Variable
552	Pulse Output Max Freq # 27
563	Terminal 29 Pulse Output Variable
555	Pulse Output Max Freq # 29

Fieldbus Communication Option A Cards:
These are available for aftermarket installation only and should be installed in the VFD option A slot. Please note this is only available for ordinary applications.

Part Number	Description
130B1200	Profibus DP VI MCA 101, coated
130B1202	DeviceNet MCA 104, coated
130B1205	CAN Open MCA 105, coated
130B1235	PROFINET MCA 120, coated
130B1219	EtherNet IP MCA 121, coated
130B1296	Modbus TCP MCA 122, coated
130B5646	EtherCAT MCA 124, coated

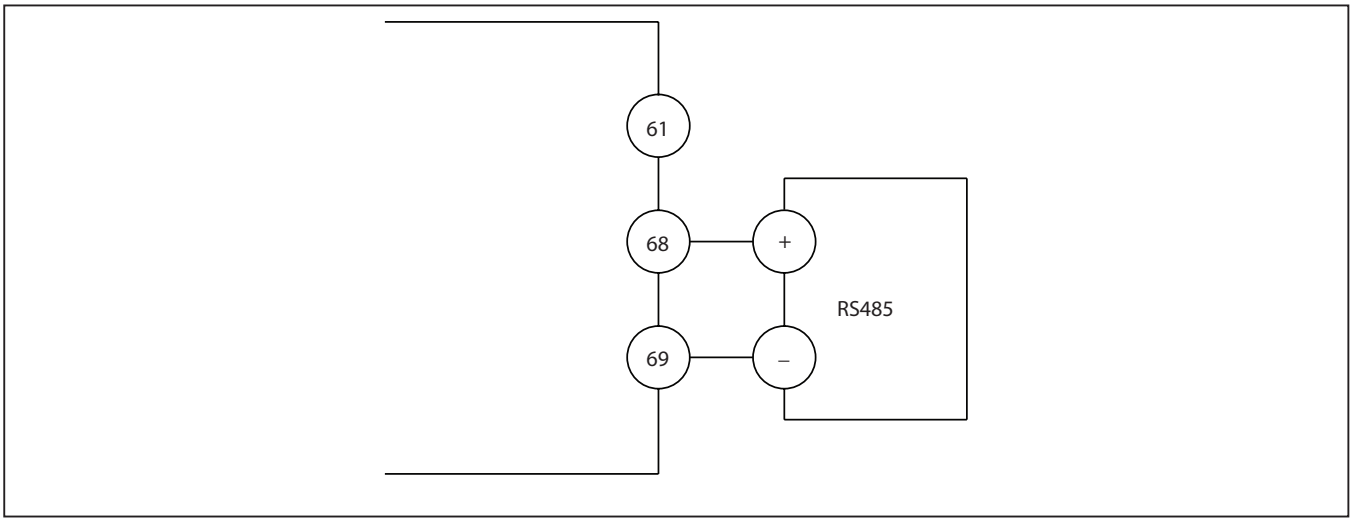

6.10. User defined readout

- Parameters 030, 031, and 032 are available to modify the "User Defined Readout" that will display in the top left corner of the main menu screen. By default, these values are set to scale motor frequency to actual pump rpm. To update the "User Defined Readout", refer to the following parameter descriptions.
  1. Select the unit to be displayed on LCP from option given in parameter 030.
  2. Minimum value is set to zero in parameter 031.
  3. Maximum value is set for parameter 032 based on maximum motor frequency (92 Hz) set in parameter 414 and calculated as below.

$$\textbf{Pump unit (Maximum)} = \frac{\textbf{Motor sync. RPM (1500) X Maximum motor frequency (92 Hz)}}{\textbf{"Motor Frequency (50 Hz) X GB ratio (12.4)"}} \times \textbf{unit conversion factor (X)}$$

Pump Unit (parameter 030)	* Unit conversion factor (X)
RPM	1
Gallons per Minute	0.25
Liters per Minute	2.46

NOTE: Adjust unit conversion factor for the selected unit given in parameter 030 to calculate maximum value for parameter 032 per the above formula.
* Unit conversion factor values are approximate and depend on back pressure.

7. ELECTRICAL INSTALLATION FOR HAZARDOUS LOCATIONS

7.1. General Wiring

Before commissioning verify that the information shown on the nameplate is compatible with explosive atmosphere that is present and with the zone where used.

All electrical wiring must be done by qualified, experienced, and certified electrician and comply with all local and national electrical codes. For NEC / CEC applications (North America), ensure wiring is done according to NFPA 70 / CSA C22.1. Installation personnel should meet IEC 60079-14 Annex A for knowledge, skills, and competencies of responsible persons, operators, technicians, and designers. The knowledge, skills and competences for maintenance and inspection personnel must comply with IEC 60079-17. The knowledge, skills and competences for repair and over-haul personnel must comply with IEC 60079-19.

System designer, installer, and maintenance personnel are responsible to ensure proper wiring and grounding (earth) and protection from lightning according to IEC 62305-3:2010.

Ensure that the VFD and motor are properly de-energized prior to any maintenance and that proper lock out / tag out procedures are followed. Refer to the VFD nameplate for the required amount of time to fully discharge capacitors. Maintenance should not be completed in the presence of an explosive gas or dust atmosphere.

Cable glands and plugs shall be selected in accordance with IEC 60079-0, IEC 60079-14 Table 10 and EPL Gb/Db at the minimum. They must be correctly sized, tightened, and gripped and account for any coldflow characteristics of the cables. Furthermore, these components must maintain and ensure the mode of protection (Ex) and the rated index of protection (IP).

The hazardous motors are equipped with 3 PTC thermal sensors (1 per phase). It is required that these are properly wired to the PTC thermistor card in the VFD to de-energize the motor in the event of a thermal event. The PTC thermal sensors have a set point of 150°C on the motor windings to ensure rated surface temperatures.

Ensure the hazardous motor is painted red to indicate hazardous duty model.

Ensure the VFD is placed in a safe (non-hazardous) area.

7.2. Power Wiring

Refer to section 6.1 for VFD - Wiring Diaphragm.
Refer to section 6.3 for VFD Input Power Requirements.
Refer to section 6.4.1 for VFD - Input Power Wiring.
Refer to section 6.4.2 for VFD - Output Power Wiring.
Refer to section 6.4.3 for Motor - Input Power Wiring.

* See page 5 for hazardous motor terminal box gland type and sizes.
* Ensure the use of a shielded power cable between the VFD and the motor.

7.3. Control Wiring (Required)

7.3.1 Leak Detector Wiring

There are 3 leak detectors that are used per pump which come with 2 meters of cable length with flying lead connections. Each leak detector requires the use of 2 zener barriers (not supplied with pump but available as an accessory item) which should be wired as shown by the schematic below by a qualified, experienced and certified electrician according to any local and national electric codes. See below for leak detector safe loop calculations.

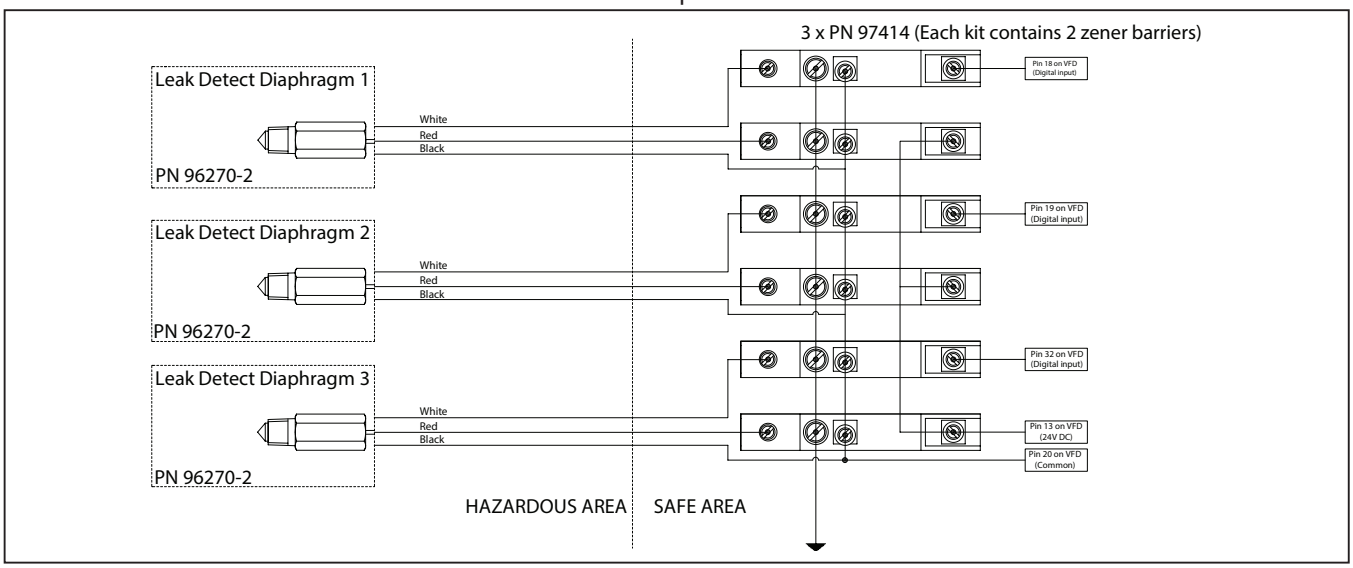

ZENER Barrier, Leak Detection Sensor PN	Voltage	Device Rating (mA)	Temperature Rating
97414 (ATEX / IECEx / NEC / CEC)	24 VDC	100	-4°F - 140°F (-20°C - 60°C)

Leak Detection Sensor PN	Voltage	Device Rating (mA)	Temperature Rating
96270-2 (ATEX / IECEx / NEC / CEC)	24 VDC	40	-0°F - 176°F (-18°C - 80°C)

- Recommended cable (3 Conductor with Single Outer Jacket)

Manufacturer	Alpha Wire
Part Number	1173C
Conductor	22 AWG
Voltage Rating	300 V RMS
C	33 PF/FT @ 1KHz
L	0.18 mH/Ft

Leak Detector Safe Loop Calculations

Leak Detector	Cable	Zener Barrier
IR Part Number 96270-2	Alpha Wire 1173C	IR Part Number 97414
Ui = 32 VDC		Uo = 25.2 VDC
Ii = 87 mA		Io = 74 mA
Pi = 0.616 W		Po = 0.464 W
Ci = 0.052 uF	Cc 0.055uF	Co = 0.107 uF
Li = 3.7 uH	Lc 6.488mH	Lo = 6.492 mH
Um = 250 VAC/DC		Um = 250 VAC/DC
Ta = -18oC To +80oC		Ta = -40° C To +60° C

Ui ≥ Uo (32 V > 25.2 V)
Ii ≥ Io (87 mA > 74 mA)
Pi ≥ Po (0.616 W > 0.464 W)

Maximum Cable Capacitance Cc = Co-Ci ≥ 0.107 uF - 0.052 uF = 0.055 uF
Maximum Cable Inductance Lc = Lo-Li ≥ 6.492 mH - 0.0037 mH = 6.488 mH

As per cable manufacturer Alpha Wire, Cable Capacitance = 33PF/FT, Cable Inductance = 0.00018 mH/FT
Maximum cable run length = 359 feet
Calculated Cable Capacitance = 11.8 nF < 0.055 uF
Calculated Cable Inductance = 6.48 mH < 6.462 mH

7.3.2 Thermal Protection - Hazardous Motor

⚠ CAUTION Do not connect the "Logic Out" (Pin 10) from MCB 112 card to VFD digital input pin 33. The digital inputs on the VFD are configured for NPN and are not compatible with the logic out from the PTC thermistor card.

- The hazardous motor is installed with 3 PTC thermal sensors in series. It is required to wire the PTC sensors to terminals T1 and T2 on the MCB 112 PTC thermistor card installed in the option A slot of the VFD. This card comes pre-installed when the hazardous VFD option is ordered.
- Ensure T37 (Safe Stop) from MCB 112 Thermistor card is wired to pin 37 on VFD as shown below. If an emergency stop is installed on this unit (recommended), it will need to be wired in series between these terminals as shown. Additionally, when and emergency stop is in series with the output of the PTC thermistor card, the Safe Torque Off digital input (pin 37) can be tripped by either the PTC thermal sensor or the E-stop (Alarm 68).
- Please note that the option A slot is not available for fieldbus communication card options for hazardous duty pump configurations.

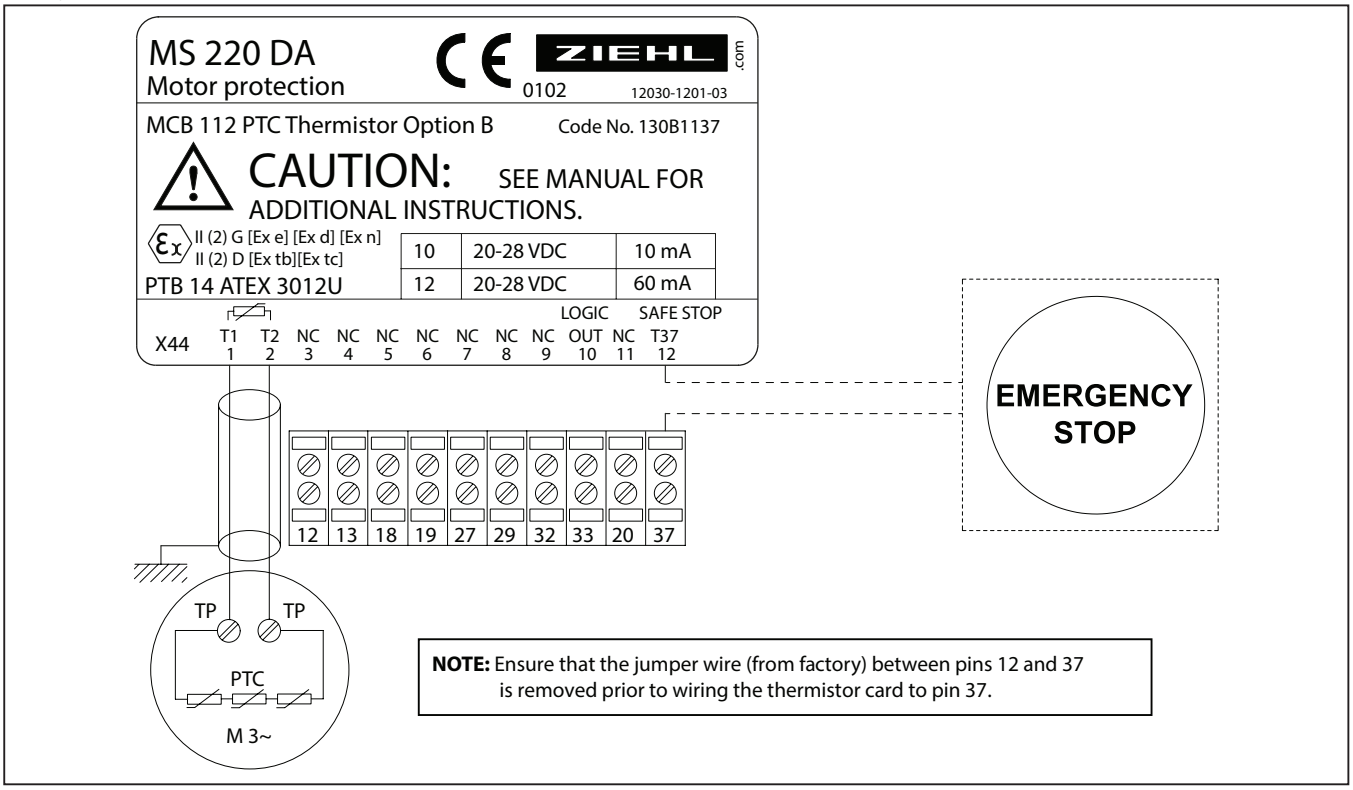

7.3.3 Encoder Wiring - Hazardous Motor

- The hazardous duty motor will come with a 1024pt TTL encoder with 10 meters of cable lengths and flying lead connections. The motor will ship without the encoder installed to minimize the chance of damage during shipping and installation since the encoder is installed on top of the rain canopy. Refer to Instructions sheet (PN 97999-1998) with the encoder mounting kit (PN 67577) for proper mounting.
- If the VFD is placed more than 10 meters from the motor, the encoder cable will need to be extended back to the drive by a qualified, experienced and certified electrician according to any local and national electric codes.
- The flying leads from the encoder will need to be wired to the VFD MCB 102 encoder card per the table below. Refer to section 6.5.3 for encoder wiring schematic.

Wire Color	Encoder card Terminal	Description
Red	(3)	5V
Black	(4)	GND
White	(5)	A INPUT
Green	(6)	A INV INPUT
Blue	(7)	B INPUT
Violet	(8)	B INV INPUT
Yellow	(9)	Z INPUT
Brown	(10)	Z INV INPUT

⚠ CAUTION Extra caution should be taken to ensure the hazardous encoder is wired correctly. Incorrect wiring will damage the encoder and result in a W90 alarm.

Part Numbers
PN 67576 - Hazardous Encoder
PN 67577 - Encoder Mounting Kit

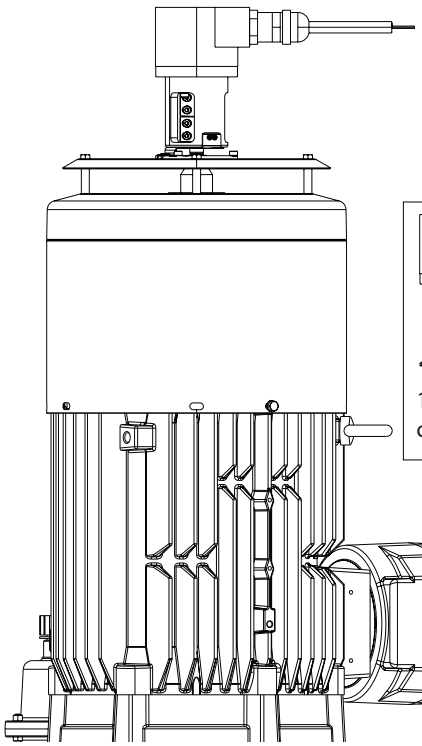

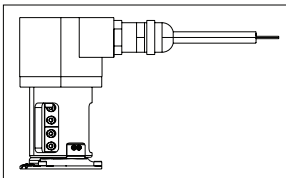

1024pt TTL encoder with 10 meters of cable length installed on motor

Figure 10

7.4. Control Wiring (Optional)

Refer to section 6.7 for control wiring details and schematics.

7.5. Configured Input/Output Summary - Hazardous

Intended function	Alarm	Digital I/O Terminal	Ground Terminal	24VDC Terminal
Diaphragm 1 Leak Detect	AA1 - Diaphragm 1 Leak	18	20, 39 or 55	12 or 13
Diaphragm 2 Leak Detect	AA2 - Diaphragm 2 Leak	19	20, 39 or 55	12 or 13
Diaphragm 3 Leak Detect	AA3 - Diaphragm 3 Leak	32	20, 39 or 55	12 or 13
PTC Thermal Sensors	Alarm 68	37①	20, 39 or 55	N / A
Safe Stop (E Stop)	Alarm 68	37	N / A	12 or 13
User Configurable I/O		27	20, 39 or 55	N / A
User Configurable I/O		29	20, 39 or 55	N / A
		Analog In Terminal	**Ground Terminal**	**10VDC Terminal**
Speed Control		53	20, 39 or 55	50
Torque Control		54	20, 39 or 55	50
		Analog Out Terminal		
User Configurable Output		42	20, 39 or 55	N / A

① PTC sensors are wired directly to the MCB 112 PTC Thermistor Card. The output of the card is wired to terminal 37. Refer to section 7.2.2.

7.6. VFD Serial Communication - Hazardous

- The VFD comes equipped with Modbus RTU as a standard fieldbus communication protocol. Refer to section 6.9 for wiring details.
- Fieldbus communication A slot card options are not usable with a hazardous VFD equipped with the PTC Thermistor Card.

8. GROUNDING

Before operating the pump, ground the system as explained below.

8.1. Pump Grounding

- All pumps have a ground screw installed in Crankcase housing. Connect one end of the grounding wire to ground screw and other end of the grounding wire to suitable earth ground.
- The cross section of grounding wire must be at least 4 mm^2

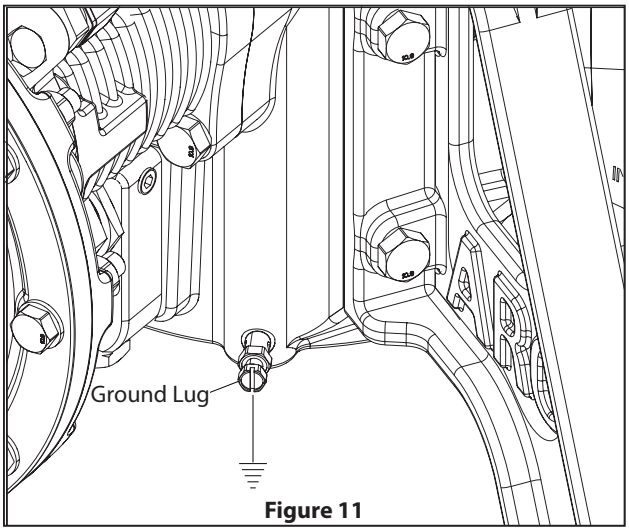

Figure 11

8.2. VFD Grounding

⚠ WARNING LEAKAGE CURRENT HAZARD

Leakage currents exceed 3.5 mA. Failure to ground the drive properly can result in death or serious injury.

Ensure that the minimum size of the ground conductor complies with the local safety regulations for high touch current equipment.

- Ground the variable frequency drive through a proper connection to a power source.
- Ground the drive in accordance with applicable standards and directives.
- Use a dedicated ground wire for input power, motor power, and control wiring.
- Do not ground 1 drive to another in a daisy-chain fashion.
- Keep the ground wire connections as short as possible.
- Follow motor manufacturer wiring requirements.
- Minimum cable cross-section for the ground wires: 10 mm^2 (7 AWG).
- Separately terminate individual ground wires, both complying with the dimension requirements.

8.3. Electric Motor Grounding

⚠ WARNING

It is compulsory to earth the motor. Earthing must be performed in accordance with current regulations (protection of workers).

Motors have a ground screw inside the terminal box. Use it to ground the motor to the controller.

- The cross section of grounding wire must be at least 2.5 mm^2

9. OPERATION

9.1. Pre Operation Checklist

- VFD is configured according to the motor requirement.
- Close the safety cover properly and check that all cable glands are firmly tightened.
- Ensure that input power to the unit is off and locked out. Do no rely on the drive disconnect switches for input power isolation.
- Verify that there is no voltage on input terminals L1 (91), L2 (92), and L3 (93), phase-to-phase, and phase-to-ground.
- Verify that there is no voltage on output terminals 96 (U), 97 (V), and 98 (W), phase-to-phase, and phase-to-ground.
- Confirm continuity of the motor by measuring Ω values on U–V (96–97), V–W (97–98), and W–U (98–96).
- Check for proper grounding of the drive and the motor.
- Inspect the drive for loose connections on the terminals.
- Confirm that the supply voltage matches the voltage of the drive and the motor.
- Always flush the pump with a solvent compatible with the material being pumped if the material being pumped is subject to "setting up" when not in use for a period of time.
- The outlet material volume is governed not only by the Fluid pressure but also by the material supply available at the inlet. The material supply tubing should not be too small or restrictive. Be sure not to use hose which might collapse.
- Secure the pump legs and bolted to a suitable surface (concrete floor) to ensure against damage by vibration.
- If this Pump is used for prolonged operation at low speed ensure there is enough ventilation around the motor to cool it efficiently.
- Set the desired frequency on the VFD.
- Press the start (run) button on the VFD.

9.2. Personal Menu Settings

Parameter	Description	Function
001	Language	Select the display language.
021	Display Line 1.2 Small	Select a variable for display on main menu screen, top middle position - Motor current default.
030	Unit for User-Defined Readout	Select the desired unit for Custom Readout.
031	Min Value of User Defined Readout	Set the Custom Readout value that corresponds to zero speed.
032	Max value of user defined readout	Set the Custom Readout value that corresponds to the Motor Speed High Limit.
040	Hand On Key on LCP	Select Disabled [0] to avoid accidental start of the drive in Hand mode. Select Password [2] to avoid unauthorized start in Hand mode.
042	Auto On key on LCP	Select Disabled [0] to avoid accidental start of the drive in Auto mode. Select Password [2] to avoid unauthorized start in Auto mode.
050	LCP Copy	Copy parameters to and from the LCP. Copied parameters can be used to transfer settings from one frequency converter to another.
066	Personal menu access w/o password	The personal menu is set to Full access [0] by default. Select read only to enable personal menu password. Default password is 1397.
070	Date and Time	Set the date and time of the internal clock.
071	Date Format	Set the date format.
072	Time Format	Set the time format.
416	Torque Limit Motor Mode	The motor torque limit percentage can be set between 0-100% to control pump fluid pressure output. Do not exceed 100%!
420	Torque Limit Factor Source	Select [6] Analog in 54 to scale the limits set in parameter 416 from 0% to 100% via analog control.
501	Terminal 27 Mode	Define terminal 27 as digital input or output. Set to input by default.
502	Terminal 29 Mode	Define terminal 29 as digital input or output. Set to input by default.
512	Terminal 27 Digital Input	Select the function from the available digital input range. It is recommended to set T27 to [8] Start for use with analog control methods.
513	Terminal 29 Digital Input	Select the function from the available digital input range. It is recommended to set T29 to [1] Reset for use with analog control methods.
515	Terminal 33 Digital Input	Select the function from the available digital input range.
530	Digital Output Term 27	Select the function from the available digital output range. Select [55] for pulse output to be determined using parameter 560.
531	Digital Output Term 29	Select the function from the available digital output range. Select [55] for pulse output to be determined using parameter 563.
560	Terminal 27 Pulse Output Variable	Select the variable for pulse output on terminal 27.
562	Pulse Output Max Freq #27	Set the maximum frequency for terminal 27, corresponding to the output variable selected in parameter 560.
563	Terminal 29 Pulse Output Variable	Select the variable for pulse output on terminal 29.

Parame-ter	Description	Function
565	Pulse Output Max Freq #29	Set the maximum frequency for terminal 29, corresponding to the output variable selected in parameter 563.
540	Function Relay	Define relay functions using 540.0 and 540.1 (2 relays available).
610	Terminal 53 Low Voltage	Enter the low voltage value (Default 0.07V). This corresponds to the minimum reference value of 0 Hz.
611	Terminal 53 High Voltage	Enter the high voltage value (Default 10V). This correspond to the maximum reference value of 84 Hz.
612	Terminal 53 Low Current	Enter the low current value (Default 4mA). This correspond to the minimum reference value of 0 Hz.
613	Terminal 53 High Current	Enter the high current value (Default 20mA). This correspond to the maximum reference value 84 Hz.
620	Terminal 54 Low Voltage	Enter the low voltage value (Default 0.07V). This corresponds to 0% of torque limit defined by par. 416 when par. 420 is set to [6].
621	Terminal 54 High Voltage	Enter the high voltage value (Default 10V). This corresponds to 100% of torque limit defined by par. 416 when par. 420 is set to [6].
622	Terminal 54 Low Current	Enter the low current value (Default 4mA). This corresponds to 0% of torque limit defined by par. 416 when par. 420 is set to [6].
623	Terminal 54 High Current	Enter the high current value (Default 20mA). This corresponds to 100% of torque limit defined by par. 416 when par. 420 is set to [6].
650	Terminal 42 output (mA)	Select the function of Terminal 42 as an analog current output.
651	Terminal 42 output min scale	Scale the minimum output of the selected analog signal at terminal 42, as a percentage of the maximum signal value.
652	Terminal 42 output max scale	Scale the maximum output of the selected analog signal at terminal 42.
830	Protocol	Select the protocol to be used. Select [2] for Modbus RTU.
831	Address	Enter the address for the drive port. Valid range: 1 - 126.
832	FC Port Baud Rate	Select the baud rate for the drive port.
833	Parity / Stop Bits	Set Even / Odd / No parity.
1312	Comparator Value (0-9)	Set trigger level for the variable that is monitored by this comparator. It allows to optimize deadhead settings or leak detect filter time.
1502	KWH Counter	Read only display of KWh Counter.
2310	Maintenance Item (0-5)	Set the item to be associated with the preventive maintenance event.
2311	Maintenance Action (0-5)	Set the action to be associated with the preventive maintenance event.
2312	Maintenance Base (0-5)	Set this parameter to running hours / Operating hours / Date and Time
2313	Maintenance Interval (0-5)	Set the interval associated with the current preventive maintenance event. This parameter used only if parameter 2312 is set to running hours / Operating hours.
2314	Maintenance Time and Date (0-5)	Set the Date and Time for next maintenance occurrence if the preventive maintenance event is based on Date / Time.
2315	Rest Maintenance Word	Set this parameter to [1] to rest maintenance time. This parameter changes back to [0] when pressing OK.
2316	Maintenance Text (0-5)	Maintenance text associated with parameter 2310 or parameter 2311 written on LCP.

9.3. VFD Smart Setup

When the VFD is powered on for the first time, it will automatically start up in "Smart Setup" mode to properly configure the VFD parameters for the desired language, motor size, motor type, and type of thermal protection. This setup program will only need to be completed once and it will have the following steps:

1. Select language - Choose desired language.
2. Select motor - Choose appropriate motor size (2.2 kw for 1" pump).
3. Select motor type – Choose "Black" for ordinary motor or "Red" for hazardous motor.

Use the VFD keypad to navigate the smart setup program. Use the "right arrow" to move to the next screen. For screens with informational text only, press "OK" to move to the next screen. To change a parameter option (for example language), press "OK" to highlight the parameter, use the "up or down arrows" to change the selection to the desired parameter, and then press "OK" again to deselect that parameter before moving on to the next screen. Use the "left arrow" to navigate backwards through the program if needed. When the setup program is complete, the VFD is properly configured for use.

In the event that the "smart setup" program was setup incorrectly or needs to be re-run, then this can be accessed by pressing the "Quick Menu" button on the VFD keypad and selecting option "Q4 Smart Setup".

10. MAINTENANCE

Refer to the part views and descriptions as provided on page 28 through 37 for parts identification and Service Kit information.

- Service kits are divided to service four separate section: 1. CRANKCASE SECTION, 2. FLUID SECTION, 3. PRV SECTION, 4. OIL FILTRATION SECTION. The FLUID SECTION and PRV SECTION is divided further to match typical part MATERIAL OPTIONS.
- Provide a clean work surface to protect sensitive internal moving parts from contamination from dirt and foreign matter during service disassembly and reassembly.
- Keep good records of service activity and include pump in preventive maintenance program.
- Before disassembling
  - Empty oil from Crankcase housing through drain port. Remove 3/8" NPT drain plug in Crankcase housing below lowest cylinder.
  - Empty captured material in the outlet Manifold by running the pump long enough to thoroughly clean the pump and hoses.
  - Remove bolt from PRV Manifold and empty captured material from inlet Manifold.

MAINTENANCE RECOMMENDATIONS – FLUID SECTION		
Maintenance Item	**Frequency**	**Indication**
Diaphragms	As needed	Pump will be shut down by the VFD due to fluid detection by optical leak detection sensors installed in each air cap. VFD alarm text "Diaphragm 1, 2 or 3 Leak".
Rubber Bellows	Every Diaphragm change	Preventative to ensure robust protection of pump Crankcase.
Balls	As needed	Erratic pump behavior, excessive pulsation, inability to dead-head pump with the pump continuing to cycle, reduction in flow; Visual inspection.
Seats	As needed	Visual inspection
PRV Bellows	As needed	In the event of a PRV bellows rupture, fluid will be fully contained and directed to the air cap directly below the PRV. This will trip the corresponding leak detect and VFD will display "AA1 - Diaphragm 1 Leak" if wired per recommendations.

NOTE: Frequency of maintenance fluid section maintenance items is dependent on fluid abrasiveness, cycle rate, pressure conditions, temperature, compatibility of the fluid, and duty cycle.

MAINTENANCE RECOMMENDATIONS – PUMP CRANKCASE		
Maintenance Item	**Frequency**	**Indication**
Oil Change/ Filter Element	Every 5,000 hrs or once per year	Scheduled

- During pump maintenance, it is recommended to rotate the Crankshaft manually to ensure that it is rotating freely.
- Monitor oil level in Crankcase assembly through sight glass fitted in pump. For hazardous applications, check oil level weekly.

MAINTENANCE RECOMMENDATIONS – GEAR MOTOR		
Maintenance Item	**Frequency**	**Indication**
Drain condensation from motor drive end	Every 6 months (sooner in high humidity and large temperature swing environments)	Scheduled
Oil Change	Every 25,000 hrs or every 5 years	Scheduled
Replace Seals	Every 25,000 hrs or every 5 years	Scheduled - Change with Oil

NOTE: If IP rating of motor is not important for a specific application, drain plugs in motor can be permanently removed.

WARNING: It is recommended to check the oil level in the motor gearbox and pump crankcase once a week for hazardous applications.

Use only ARO genuine oil for crankcase oil changes to ensure proper functionality and compatibility (see service kit PN below). 5 liters of oil are included in the service kit. 3.6 liters are required for the crankcase. The remaining oil can be used to maintain proper oil levels in the event of any oil loss.

For the motor gearbox, it is advised to use **ISO VG 150 PAO** synthetic oil. For oil fill quantities, please refer to Section 1.3. Shell Omala S4 GX (or GXV) 150 is the preferred oil. Mobil SHC™ 629 is a recognized equivalent.

10.1. Service Kits

Refer to Model Description Chart to match the pump material options.
637560-XX for Fluid section repair (see page 28).
67557-X for PRV section assembly (see page 31).
EP10-CSVX-01-A for Crankcase section repair (see page 33).

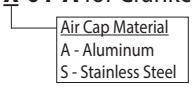

637561 for Pump Crankcase seals service kit (see page 33).
637562 for Oil and Filter replacement (see page 36).
67558 for Oil piston pump assembly (see page 36).

PARTS LIST / FLUID SECTION EP10-XXXXX-XXX-XXXX

Fluid Section Service Kits:

★ **-XX Fluid Section Service Kits include:** Balls (see BALL Option, refer to -XX in chart below), Diaphragms (see DIAPHRAGM Option, refer to -XX in chart below), and items 12 and 13 (listed below).

EXTERNAL HARDWARE OPTIONS EP10-XXXXX-XXX-XXX

Item	Description (size)	Qty	Part No.	Mtl
26	Bolt (M8 x 1.25 - 6g x 40 mm)	(30)	98223	[SS]
27	Bolt (M8 x 1.25 - 6g x 50 mm)	(30)	98169	[SS]
28	Flat washer (M8)	(60)	96217	[SS]
29	Flange Nut (M8 x 1.25 - 6H)	(60)	95879	[SS]

COMMON PARTS

Item	Description (size)	Qty	Part No.	Mtl
★ 12	Diaphragm, Soft Washer	(3)	98161	[SP]
★ ⊙ 13	Bellows	(3)	98119-2	[V]
⊙ 16	Bellows Plate	(3)	98118-2	[SS]
⊙ 17	Screw (M5 x 0.8 - 6g x 10 mm)	(12)	98057	[SS]
18	Spacer, Piston	(3)	98194	[C]
20	Roll Pin (1/8" x 0.5" length)	(6)	Y178-37-S	[SS]

⊙ Indicate parts included in Pump Crankcase Replacement Assembly, see page 33

SEAT OPTIONS EP10-XXXXX-XXX-XXX

"21"

-XXXXX	Seat	Qty	Mtl
-XXHXX	94706	(6)	[SH]
-XXPXX	94707-1	(6)	[P]

-XXXXX	Seat	Qty	[Mtl]
-XXSXX	96151	(6)	[SS]

BALL OPTIONS EP10-XXXXX-XXX-XXX

★ "22" (2" dia.)

-XXXXX	Ball	Qty	Mtl
-XXXAX	93278-A	(6)	[Sp]
-XXXSX	92408	(6)	[SS]
-XXXTX	93278-4	(6)	[T]

-XXXXX	Ball	Qty	Mtl
-XXXVX	93278-3	(6)	[V]

DIAPHRAGM OPTIONS EP10-XXXXX-XXX-XXX

Item	Description	QTY	Santoprene® Diaphragm EP-XXXXA		PTFE Diaphragm EP-XXXXT	
			Part No	[Mtl]	Part No	[Mtl]
★ 7	Diaphragm - Primary	(3)	98165-A	[Sp]	98163	[T]
★ 8	Diaphragm - Secondary	(3)	98166-A	[Sp]	98167-A	[Sp]
★ 10	Diaphragm - Tertiary	(3)	----	---	98168-A	[Sp]

FLUID SECTION SERVICE KIT

-XXXXX	★ Service Kit
	-XX = Ball -XX = Diaphragm
	637560-XX

MANIFOLD / FLUID CAP MATERIAL OPTIONS EP10-XXXXX-XXX-XXX

Item	Description	Qty	Conductive Polypropylene EP10-EXXXX Part No.	[Mtl]	Polypropylene EP10-PXXXX Part No.	[Mtl]
5	Backup Washer	(3)	98164-1	[SS]	98164-1	[SS]
6	Fluid Washer	(3)	98174-1	[P]	98174-1	[P]
15	Fluid Cap	(3)	98122-3	[CP]	98122-1	[P]
60	Inlet Manifold	(1)	98124-3	[CP]	98124-1	[P]
61	Outlet Manifold	(1)	98123-3	[CP]	98123-1	[P]

MATERIAL CODE

[A]	= Aluminum
[B]	= Nitrile
[Br]	= Brass
[C]	= Carbon Steel
[CI]	= Cast Iron
[Co]	= Copper
[D]	= Acetal
[EP]	= EPDM
[F]	= FEP
[H]	= Hytrel®
[NEP]	= Neoprene
[Ny]	= Nylon
[P]	= Polypropylene
[PU]	= Polyurethane
[SH]	= Hard Stainless Steel
[SP]	= Santoprene®
[SS]	= Stainless Steel
[T]	= PTFE
[V]	= Viton®

O-RING OPTIONS EP10-XXXXX-XXX-XXX

Item	Description (size)	Qty	Santoprene® Diaphragm EP10-XXXXA Part No.	[Mtl]	PTFE Diaphragm EP10-XXXXT Part No.	[Mtl]	Part List
★ 19	O - Ring (1/8" x 2-1/8" OD)	(6)	93280	[EP]	93282	[F]	Page 29
★ 33	O - Ring (3/16" x 2-7/8" OD)	(6)	Y323-333	[EP]	Y324-333	[F]	Page 29
❖ 41	O - Ring (3/32" x 1-3/8" OD) - Primary	(2)	Y323-123	[EP]	Y324-123	[F]	Page 32
❖ 58	O - Ring (1/8" x 2" OD)	(1)	Y323-224	[EP]	Y324-224	[F]	Page 32
❖ 59	O - Ring (3/32" x 1-3/8" OD) - Secondary	(2)	Y323-123	[EP]	Y327-123	[V]	Page 32

❖ Indicate parts included in PRV assembly, see page 31.

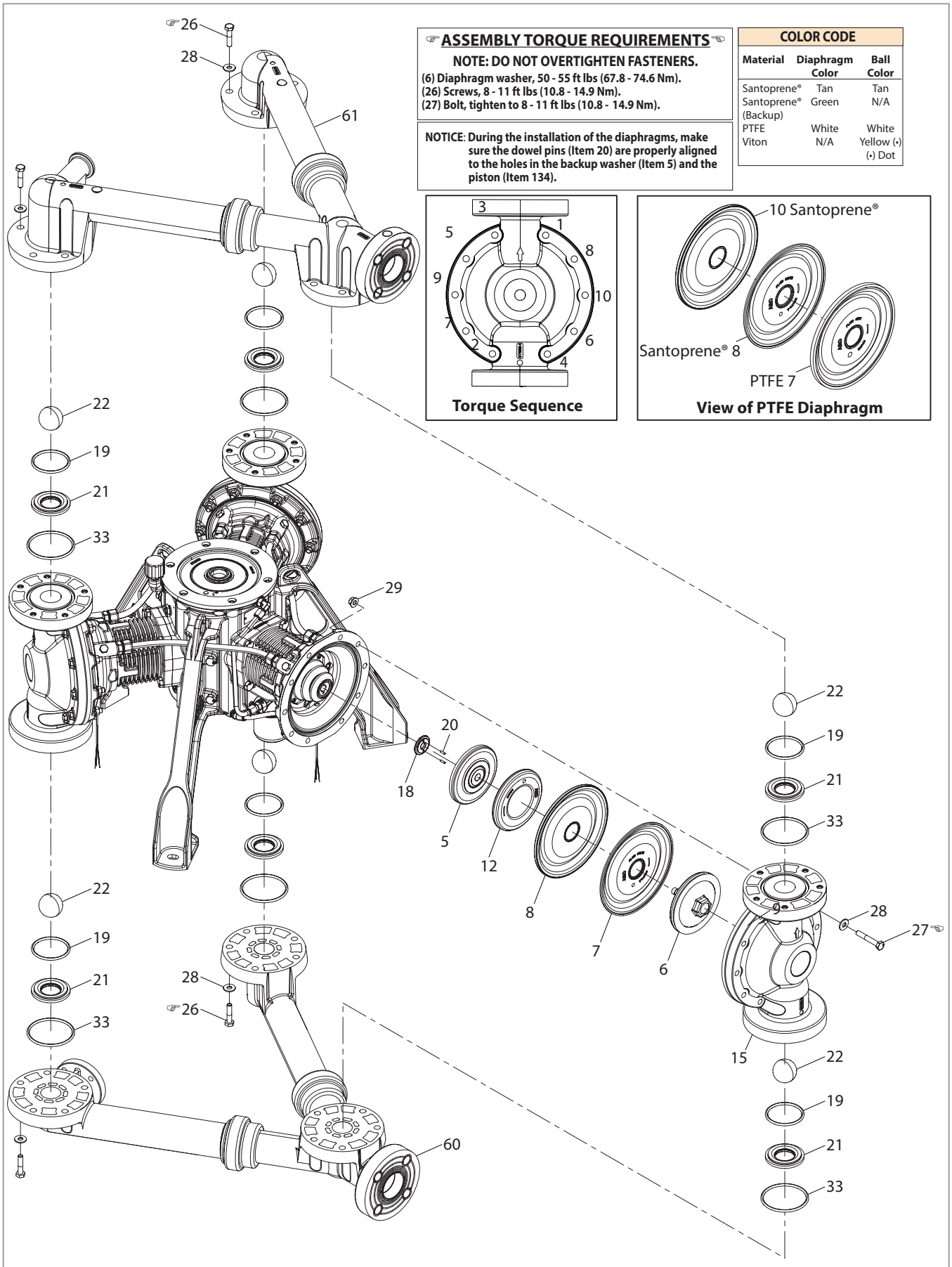
☞26
28
61
22
19
21
33
29
20
18
5
12
8
7
6
9
28
27☜
15
22
19
21
33
22
19
21
33
28
☞26
60
☞ASSEMBLY TORQUE REQUIREMENTS☜
NOTE: DO NOT OVERTIGHTEN FASTENERS.
(6) Diaphragm washer, 50 - 55 ft lbs (67.8 - 74.6 Nm).
(26) Screws, 8 - 11 ft lbs (10.8 - 14.9 Nm).
(27) Bolt, tighten to 8 - 11 ft lbs (10.8 - 14.9 Nm).
NOTICE: During the installation of the diaphragms, make sure the dowel pins (Item 20) are properly aligned to the holes in the backup washer (Item 5) and the piston (Item 134).
COLOR CODE
Material | Diaphragm Color | Ball Color
Santoprene® | Tan | Tan
Santoprene® (Backup) | Green | N/A
PTFE | White | White
Viton | N/A | Yellow (•) (•) Dot
3
1
5
8
9
10
7
6
2
4
Torque Sequence
10 Santoprene®
Santoprene® 8
PTFE 7
View of PTFE Diaphragm

Figure 12

FLUID SECTION DISASSEMBLY

- Remove inlet Manifolds (60) and outlet Manifolds (61) together.
- Remove (22) balls, (19) "O" ring, (21) seats and (33) "O" ring.
- Remove (15) fluid caps.

NOTE: Santoprene® Diaphragm models use a primary Diaphragm (7) and backup Diaphragm (8). PTFE Diaphragm models use a primary Diaphragm (7) and a bilayer backup Diaphragm (8 and 10). Refer to the auxiliary view in the Fluid Section illustration.

- Remove overmolded Diaphragm washer (6), primary Diaphragm (7), back up Diaphragm (8 and 10), Inner Diaphragm washer (5), Diaphragm soft pad (12), spacer (18).
- Remove Bellows plate (16) and Bellows (13).

NOTE: Do not scratch or mark the surface of Piston rod (134).

FLUID SECTION REASSEMBLY

- Reassemble parts in reverse order from the sequence in which they were removed. Refer to the torque requirements on page 29.
- Clean and inspect all parts. Replace worn or damaged parts with new parts as required.
- Install Bellows (13), Bellows plate (16) and secure with socket head screw (17).
- Diaphragms should be installed as marked and should be concave towards Fluid cap (15). "Fluid side" marking should face fluid cap. "Drive side" marking should face Crankcase.
- Install Spacer (18), Diaphragm soft pad (12), Inner Diaphragm washer (5), primary Diaphragm (7), back up Diaphragm (8 and 10) and secure it with fluid washer (6).
- Install Fluid cap (15) through hex head bolt (27), washer (28) and nut (29).
- Install (33) "O" rings, (21) seats, (19) "O" rings and (22) balls.
- Install inlet Manifold (60) and outlet Manifold (61) and secure with washer (28) and hex head bolt (26).
- Re-check torque settings after pump has been restarted and run awhile.

PARTS LIST / PRV EP10-XXXXX-XXX-XXX

MANIFOLD / HOUSING MATERIAL OPTIONS EP10-XXXXX-XXX-XXX

			Polypropylene		Conductive Polypropylene	
Item	Description (size)	Qty	Part No.	[Mtl]	Part No.	[Mtl]
40	PRV ASSY	(1)	67557-4	---	67557-5	---
❖ 44	Housing, PRV	(1)	97968-1	[P]	97968-3	[CP]
66	Manifold, PRV Return	(1)	98131-1	[P]	98131-3	[CP]

EXTERNAL HARDWARE OPTIONS EP10-XXXXX-XXX-XXX

Item	Description (size)	Qty	Part No.	Mtl
❖ 52	Flange Bolt (M8 x 1.25 - 6g x 30 mm)	(5)	95880	[SS]
❖ 53	Flanged Top Lock Nut (M8 x 1.25)	(5)	95879	[SS]
55	Flange Bolt (M10 x 1.5 - 6g x 50mm)	(4)	98208	[SS]
56	Flat washer (M10)	(4)	93360-1	[SS]
57	Flange Nut (M10 x 1.5 - 6H)	(4)	94992	[SS]

COMMON PARTS

Item	Description (size)	Qty	Part No.	Mtl
❖ 37	Clamp	4	93283	[SS]
❖ 38	Carriage Bolt (1/4" x 20 - 6g x 1-1/2")	4	Y84-403-T	[SS]
❖ 39	Nut (1/4" - 20)	4	Y12-4-S	[SS]
❖ 42	Bellows, PRV	1	97981	[T]
❖ 43	O-Ring (1/8" x 2-5/8" OD)	1	Y327-229	[V]
❖ 45	Rod, PRV	1	97980	[SS]
❖ 46	Cylinder, PRV	1	97982-2	[SS]
❖ 47	Piston, PRV	1	97979	[D]
❖ 48	O-Ring (3/16" x 2" OD)	1	Y327-326	[V]
❖ 49	Spring, PRV	1	97978	[C]
❖ 50	Cap Spring, PRV	1	97972-2	[SS]
❖ 51	Fitting (3/8" OD Tube x 1/4" NPT)	1	59474-160	[Ny]
196	Tubing (3/8" OD Clear)	(0.6 FT)	98227-XXX-X	[F]

❖ Indicate parts included in PRV assembly 67557-X (40).

PRV SECTION DISASSEMBLY

- Disconnect 3/8" OD tube (196) between PRV cylinder (46) and air cap (147).
- Loosen clam shell (37) between PRV return Manifold (66) and PRV housing (44). Remove PRV return Manifold (66) from inlet Manifold (60).
- Loosen clam shell (37) between outlet Manifold (61) and PRV housing (44). Remove PRV housing (44).
- Remove PRV cap (50), spring (49), piston assembly (45 and 47), and O-ring (48).
- Remove PRV cylinder (46) from PRV housing (44).
- Remove Bellows (42) and O-ring (43) from PRV housing (44).

PRV SECTION REASSEMBLY

- Reassemble parts in reverse order from the sequence in which they were are removed.
- Clean and inspect all parts. Replace worn or damaged parts with new parts as required.
- Assemble PTFE bellows (42) and O-ring (43) into PRV housing (44).
- Assemble PRV cylinder (46) to PRV Housing (44).
- Assemble O-ring (48) to piston assembly (45 and 47).
- Assemble piston assembly (45 and 47), spring (49) and PRV cap (50).
- Install O-ring (41) onto PRV housing (44) and PRV return Manifold (66).
- Assemble inlet of PRV housing (44) to Outlet Manifold (61) and install clam shell (37) with carriage bolts (38) and nuts (39).
- Assemble outlet of PRV housing (44) to PRV return Manifold (66) and loosely install clam shell (37) with carriage bolts (38) and nut (39).
- Assemble PRV return Manifold (66) to inlet Manifold (60) and ensure O-ring (58) is in place.
- Reconnect 3/8" OD tube (196) to push-to-connect fitting (51) installed in PRV cylinder (46).

⚠ CAUTION The PRV is intended only to protect the pump from rapid deadhead events and should not replace any system level protection that may be needed downstream of the pump.

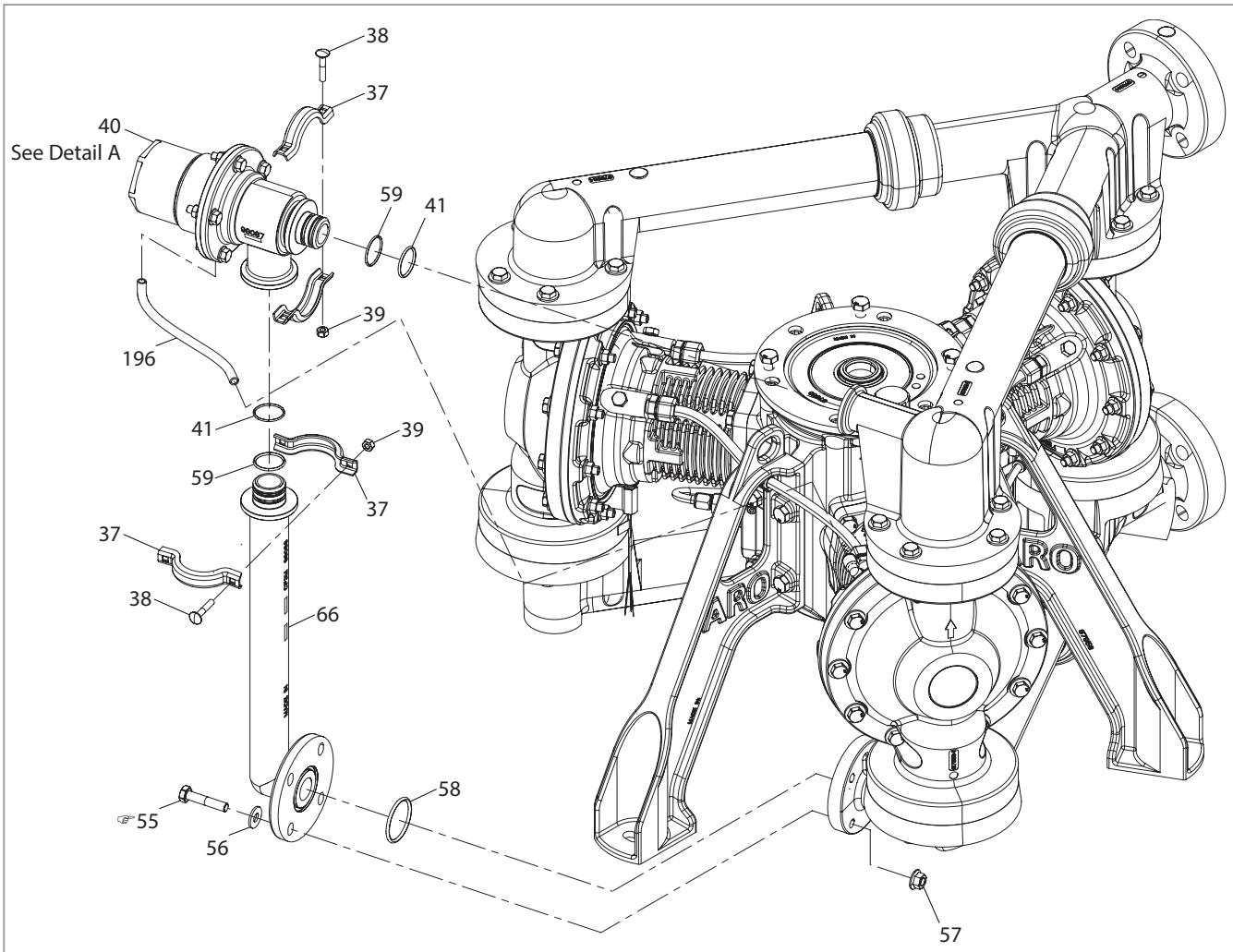

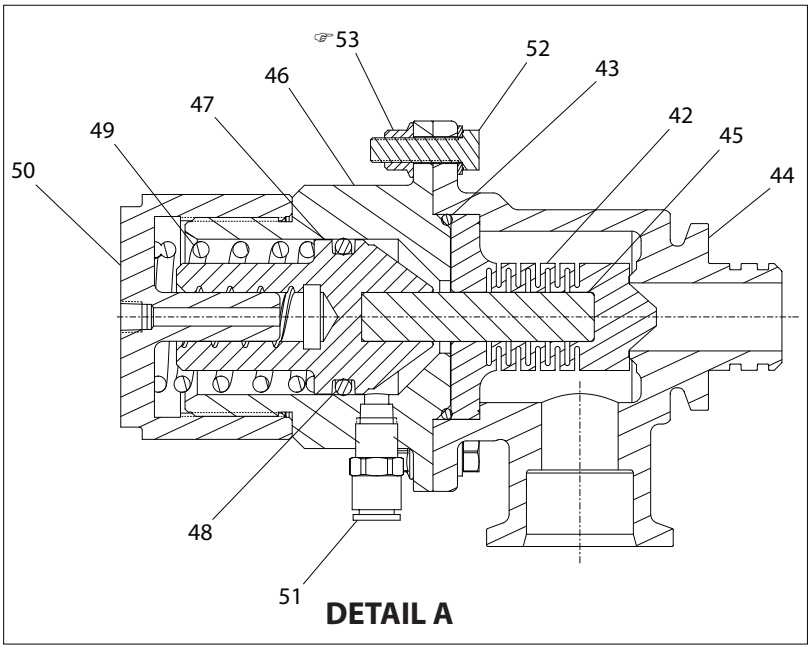

☞ASSEMBLY TORQUE REQUIREMENTS☜

NOTE: DO NOT OVERTIGHTEN FASTENERS.

(53) Nut, tighten to 7 - 10 ft lbs (9.4 - 13.6 Nm).
(55) Bolt, tighten to 20 - 25 ft lbs (27 - 34 Nm).

Figure 13

PARTS LIST / CRANKCASE EP10-XXXXX-XXX-XXX

⊙ **Pump Crankcase Replacement Assembly EP10-CSVX-01-A:** Includes all Items shown in the Crankcase parts list (below) except for item 283. Includes all items shown in the oil pump parts list (page 36). Includes items 13, 16 and 17 shown on page 28.

Note: Crankcase components are designed for the intended life of the pump. Crankshaft bearings are press fit in place and are not individually available for aftermarket replacement.

Item	Description (size)	Qty	Part No.	[Mtl]
101	Main Housing	(1)		[CI]
102	Housing Cap	(1)		[CI]
○ 103	O-Ring (1/8" x 6-1/4" OD)	(1)	Y325-258	[B]
104	Screw (M8 x 1.25 - 6g x 35 mm)	(6)	Y256-85-E	[C]
105	Leg	(3)	98115	[C]
106	Screw (M10 x 1.5 - 6g x 35 mm)	(12)	Y255-103-E	[C]
107	Bearing, Upper	(1)		[C]
108	Snap Ring (55 mm OD)	(1)	97956	[C]
109	Shaft Seal, Upper	(1)	98106	[B]
110	Shaft Sleeve, Upper	(1)		[SS]
111	Bearing, Lower	(1)		[C]
○ 112	Shaft Seal, Lower	(1)	98105	[B]
113	Shaft Sleeve, Lower	(1)		[SS]
114	Lower Cap	(1)	98104	[C]
115	Screw (M6 x 1 - 6g x 20 mm)	(3)	Y256-63-E	[C]
○ 116	O-Ring (1/8" x 1-1/2" OD)	(1)	Y325-218	[B]
○ 117	O-Ring (1/8" x 3-1/4" OD)	(1)	Y325-234	[B]
118	ASM, Crankshaft (Spline)	(1)		[C]
119	Bearing, Throw	(3)		[C]
120	Bearing, Spacer	(3)		[C]
121	Connecting Rod, Bearing-Side	(3)		[CI]
122	Roll Pin (M3 x 8 mm)	(6)	25M13EA213	[C]
124	Cam	(1)		[D]
125	Screw (M6 x 1 - 6g x 20 mm)	(2)	Y256-63-E	[C]
126	Breather (3/8" -18 NPT)	(1)	98178	[Ny]
127	Elbow (3/8" - 18 NPT)	(1)	98218	[Ny]
130	Cylinder	(3)	98191	[C]
131	Screw (M10 x 1.5 - 6g x 35 mm)	(12)	Y255-103-E	[C]
○ 132	O-Ring (1/8" x 4-3/8" OD)	(3)	Y325-243	[B]
133	Wear Sleeve	(3)	98197	[Ny]
134	Piston	(3)	98190-1	[C]
135	Wrist Pin	(3)	98113	[C]
136	Snap Ring (20mm ID)	(3)	161M13N20	[C]
137	Dowel Pin (M3 x 40 mm)	(3)	17M13B170	[C]
138	Screw (M4 x 0.7 - 6g x 8 mm)	(3)	119M2A126B	[C]

Item	Description (size)	Qty	Part No.	[Mtl]
139	Wrist Pin Journal	(3)	98051	[Br]
140	Connecting Rod, Journal-Side	(3)	98110-1	[C]
141	Screw (1/4-20 x 1")	(6)	98120	[C]
142	Rider Band	(3)	98196	[Br]
○ 143	U-Cup Seal	(3)	98198	[PU]
144	Bushing, Vent	(3)	98195	[Ny]
○ 145	O-Ring (1/8" x 3-5/8" OD)	(3)	Y325-237	[B]
146	Screw (M10 x 1.5 - 6g x 30 mm)	(12)	119M2H244	[SS]
147	Air Caps	(3)	98192	[SS]
148	Roll Pin (M5 x 16 mm)	(7)	25M13EA417	[C]
180	Drain Plug (3/8"-18 NPT)	(1)	98062	[SS]
181	Fitting (3/8" OD Tube x 1/4" NPT 90° Elbow)	(3)	59756-160	[Ny]
182	Fitting (3/8" OD Tube x 1/4" NPT 45° Elbow)	(3)	98060	[Ny]
183	Fitting (3/8" OD Tube x 3/8" NPT)	(6)	98318	[P]
184	Tubing (3/8" OD) (Black)	(1.43 ft)	98225-XXX-X	[Ny]
185	Tubing (3/8" OD) (Black)	(3.08 ft)	98225-XXX-X	[Ny]
186	Grommet, Air Cap Tubing	(3)	98189	[NEP]
187	Ground Lug (1/4" - 20)	(1)	96878	[Co]
188	Fitting (3/8" OD Tube x 1/4" NPT 90° Elbow)	(1)	59756-160	[Ny]
189	Plug	(5)	98056	[P]
190	Sight Glass (1/2" - 14 NPT)	(1)	98061	[C]
192	Screw (M10 x 1.5 - 6g x 25 mm)	(4)	Y255-101-E	[C]
□ 200	Oil container (5 L) (Aftermarket Only)	(1)	67569	
283	Leak Detection (2 meter cable)	(3)	See page 15	

□ **Item 172 (see page 36) and Item 200 included in 637562 Oil and filter replacement kit.**

○ **Indicate parts included in 637561 Pump Crankcase Seal Service Kit shown above and items 151, 154, 156, 157 and 165 shown on page 36.**

CRANKCASE SERVICE

- Crankcase section Service is continued from Fluid Section repair.
- Separate motor from pump.
- Inspect and replace old parts with new parts as necessary. Look for deep scratches on surfaces, and nicks or cuts in "O" rings.
- Take precautions to prevent cutting "O" rings upon installation.
- Lubricate "O" rings with crank case oil.
- Do not over-tighten fasteners, refer to torque specification block on view.
- Torque fasteners following restart.

CRANKCASE DISASSEMBLY

- Remove all flexible tube connection.
- Remove lower cap (114).
- Adjust Piston rod (134) position by rotating crank shaft (118) for ease in removing internal component.
- Remove Vent Bushing (144), Piston seal (143), Air cap (147), Piston wear ring (142), Cylinder(130).

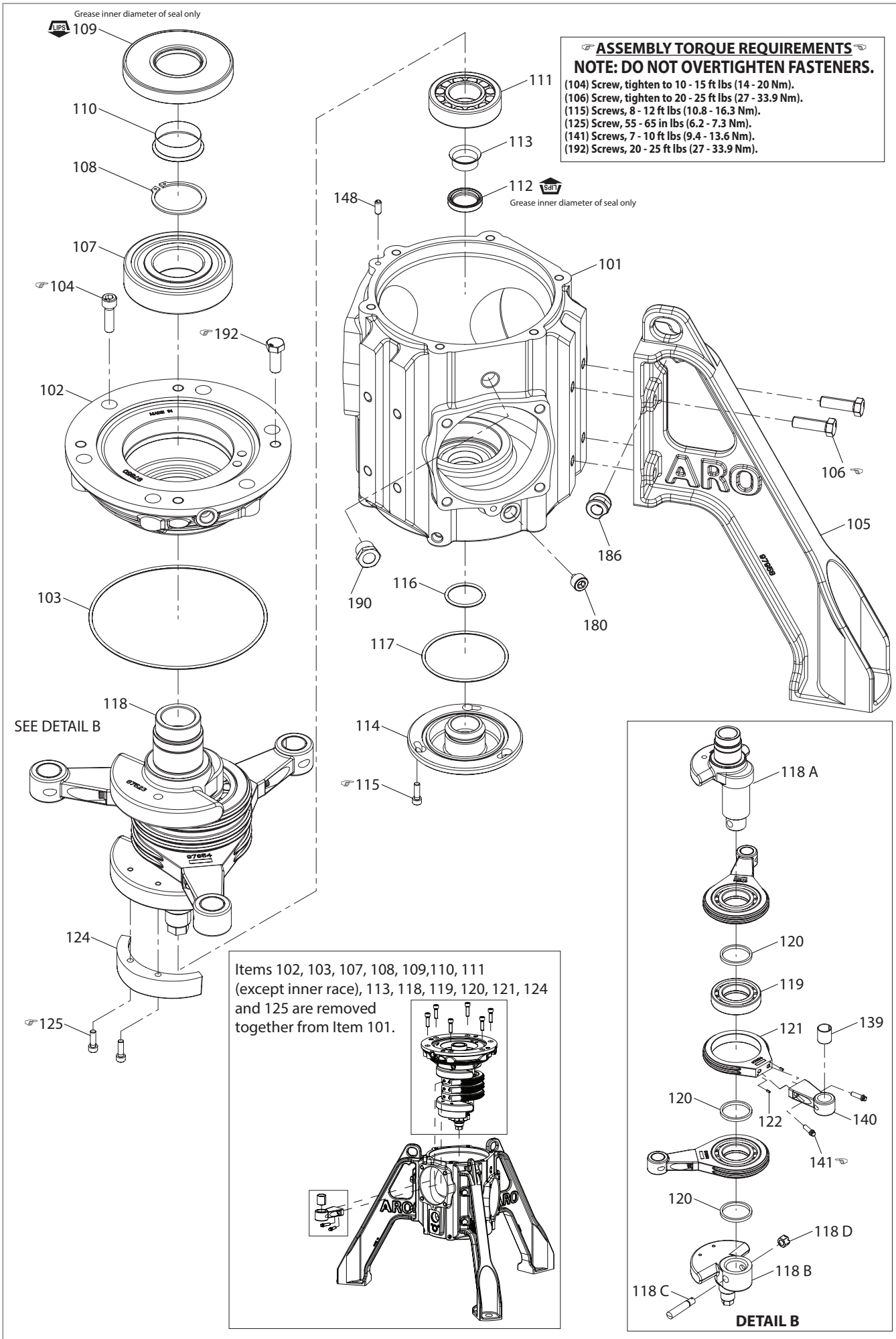
Grease inner diameter of seal only
109
110
108
107
☞104
☞192
102
103
118
SEE DETAIL B
124
☞125
111
113
112
Grease inner diameter of seal only
148
101
106 ☞
105
186
180
190
116
117
114
☞115
☞ASSEMBLY TORQUE REQUIREMENTS☜
NOTE: DO NOT OVERTIGHTEN FASTENERS.
(104) Screw, tighten to 10 - 15 ft lbs (14 - 20 Nm).
(106) Screw, tighten to 20 - 25 ft lbs (27 - 33.9 Nm).
(115) Screws, 8 - 12 ft lbs (10.8 - 16.3 Nm).
(125) Screw, 55 - 65 in lbs (6.2 - 7.3 Nm).
(141) Screws, 7 - 10 ft lbs (9.4 - 13.6 Nm).
(192) Screws, 20 - 25 ft lbs (27 - 33.9 Nm).
Items 102, 103, 107, 108, 109,110, 111 (except inner race), 113, 118, 119, 120, 121, 124 and 125 are removed together from Item 101.
118 A
120
119
121
139
120
122
140
141 ☞
120
118 D
118 B
118 C
DETAIL B

Figure 14

- Remove internal snap ring (136) and the wrist pin (135).
- Remove the piston rod (134) and rider band (133).
- Journal Bearing (139) is press fitted in to the connecting rod (140) from the factory. Remove the connecting rod (140) along with Journal (139).
- All bearing races are press fitted. However lower bearing (111) is separable between its Inner and outer race.
- Remove Housing cap (102), crank shaft assembly (118), Bearing housing (121) from Crankcase Housing (101).
- Ensure bearing housing (121) oriented in the same direction in order to remove from the Crankcase housing (101).

CRANKCASE ASSEMBLY

- Reassemble parts in reverse order from the in a sequence in which they were are removed.
- Clean and inspect all parts. Replace worn or damaged parts with new parts as required.
- If cam (124) needs to be replaced. It should be serviced prior to installing the Crankshaft (118) into the housing (101).
- If wrist pin journal (139) needs to be replaced. It should be serviced prior to installing the connecting rod (140).
- To replace Journal (139), arbor press need to be use to press new Journal while simultaneously pushing out the old journal.
- Install lower shaft seal (112) into Crankcase housing (101). Ensure O-ring (103) is installed onto housing cap.
- Lower Crankshaft assembly vertically inside Crankcase housing (101) and allow inner race of lower bearing to gently engage with outer race. Secure housing cap to housing (101) with socket head screws (104).
- Install lower cap (114) and secure with socket head screws (115). Ensure O-rings (116 and 117) are installed onto the lower cap (114).
- Assemble each of the connecting rods (140) to bearing housings (121) securing with 12 point ferry cap head screws (141).
- Install wrist pin (135) to connect piston (134) to connecting rod (140). Ensure slotted side of wrist pin (135) is facing down and engages with dowel pin (137) to prevent rotation.
- Install retaining ring (136) to hold wrist pin (135) in place.
- Install rider band (133) onto the piston (134).
- Install cylinder (130) over piston (134) and secure to housing (101) with hex head screws (131). Ensure O-ring (132) is installed onto the cylinder (130).
- Install Piston wear ring (142), Piston seal (143), vent bushing (144), Bellows (13) and bellows plate (16) on to the air cap (147) and secure with socket head screws (17).
- Install air cap (147) to the cylinder (130) and secure with socket head screws (131). Ensure O-ring (145) is installed onto the air cap (147).

NOTE: Connecting rod housing (121) need to be oriented in the same direction to fit in the Crankcase housing (101).

PARTS LIST / CRANKCASE EP10-XXXXX-XXX-XXX

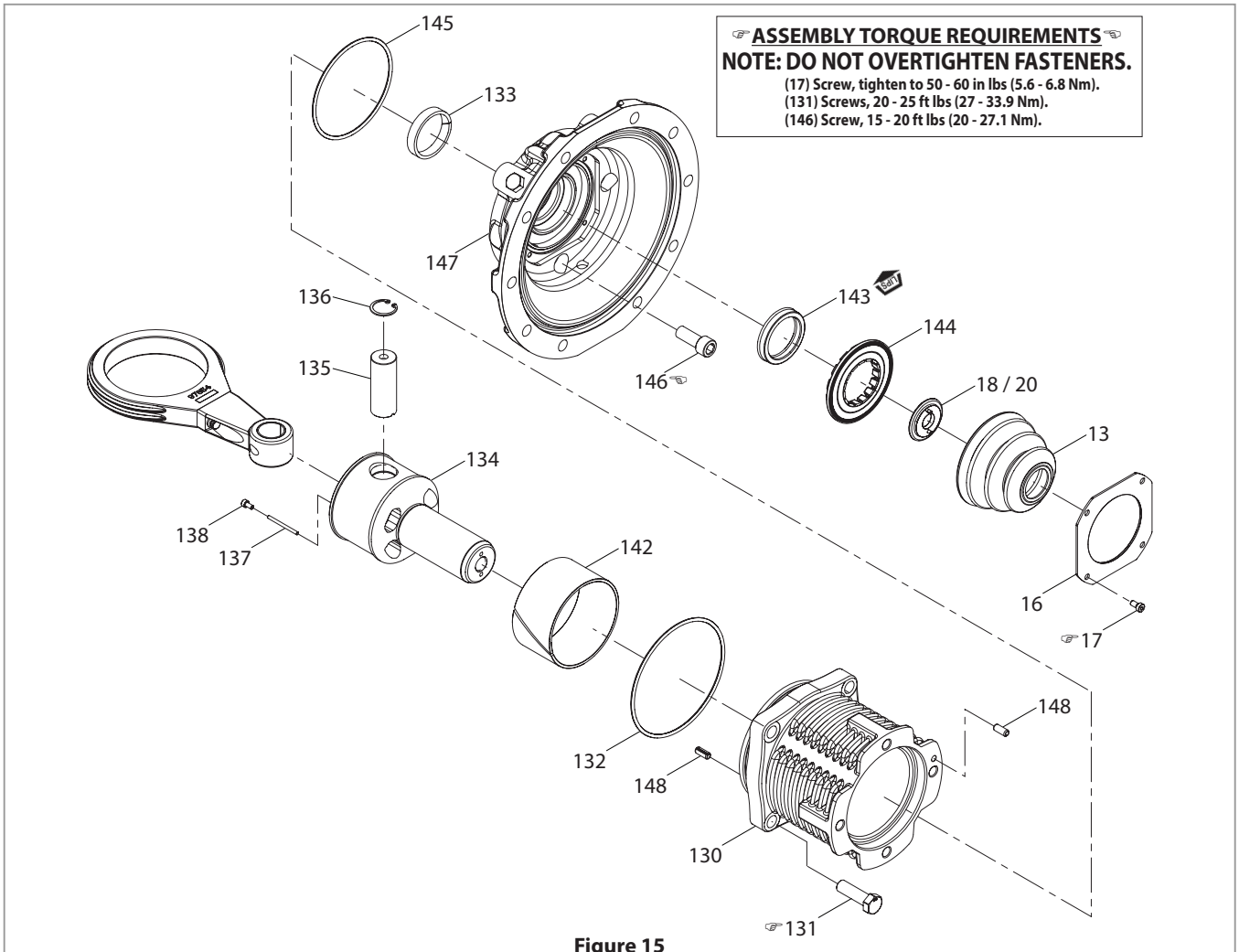

Figure 15

PARTS LIST / OIL PISTON PUMP ASSEMBLY SECTION EP10-XXXXX-XXX-XXX

Item	Description (size)	Qty	Part No.	[Mtl]
128	Plug (3/8" - 18 NPT)	(1)	Y17-52-S	[SS]
129	Fitting (9/16"-18 STOR x 3/8", 90°)	(1)	98059	[C]
149	Oil Pump Assy (Item include 150 to 170)	(1)	67558	
■ 150	Screw (M6 x 1 - 6g x 20 mm)	(2)	Y256-63-E	[C]
○ ■ 151	O-Ring (3/32" x15/16" OD)	(1)	Y325-116	[B]
■ 152	Housing, Oil Return	(1)	98030	[C]
■ 153	Cylinder, Oil Pump	(1)	98028	[C]
○ ■ 154	O-Ring (3/32" x 1-9/16" OD)	(2)	Y325-126	[B]
■ 155	Outlet, Oil Pump	(1)	98029	[C]
○ ■ 156	O-Ring (3/32" x 1-1/8" OD)	(1)	Y325-119	[B]
○ ■ 157	O-Ring (3 mm x 36 mm OD)	(1)	97872	[B]
■ 158	Plug, Return	(1)	96610-1	[C]
■ 159	Piston, Oil Pump	(1)	98027	[C]
■ 160	Spring, Piston Return	(1)	98033	[C]
■ 161	Wrist Pin Journal (20 ID x 20 L)	(1)	98051	[Br]
■ 162	Ball	(1)	Y16-112	[C]
■ 163	Spring, Oil Relief	(1)	98034	[C]
■ 164	Plug (1/8" -18 NPT) (not shown)	(1)	Y17-50-S	[SS]
○ ■ 165	O-Ring (3/32" x 11/16" OD)	(1)	Y325-112	[B]
■ 166	Valve	(2)	48070	[D]
■ 167	Check Seat	(2)	48071	[H]
■ 168	Spring, Poppet Valve	(2)	98032	[C]
■ 169	Seat, Spring	(2)	98031	[A]
■ 170	Internal Snap Ring (16 mm)	(2)	97874	[C]
171	Oil Filter ASM	(1)	98063	[A]
□ 172	Oil Filter Element (Aftermarket Only)	(1)	98064	
173	Filter Bracket	(1)	97957	[C]
174	Screw (1/4" -20 x 0.5")	(2)	98211	[C]
175	Screw (1/4" -20 x 0.5")	(2)	98211	[C]
176	Fitting (9/16"-18 STOR x 3/8")	(2)	98058	[C]
177	Bent Tube, Post Filter (3/8" OD)	(1)	98173	[SS]
178	Bent Tube, Pre Filter (3/8" OD)	(1)	98172	[SS]
179	Fitting (3/4"-16 STOR x 3/8")	(1)	98055	[C]

■ **Indicate parts included in 67558 Oil piston pump replacement assembly.**
○ **Indicate parts included in Pump Crankcase Seal Service Kit, see page 33.**
□ **Indicate parts included in 637562 Oil and filter replacement kit, and item 200 shown on page 33.**

OIL REPLACEMENT

⚠ WARNING

Dispose of oil according to any local regulatory requirements.

- Remove 3/8" NPT magnetic drain plug (Item - 180), from Crankcase housing below lowest cylinder.
  - Clean all foreign particles from the drain plug.
- Allow oil to drain from pump Crankcase to an approved oil container for disposal.
- Unscrew Filter element from filter head.
- Remove lower cap (Item – 114) for inspection of any oil leakage and replace the lower shaft seal (Item – 112) accordingly.
- Install new filter element.
  1. Lubricate filter head threads.
  2. Lubricate new oil filter gasket.
  3. Hand screwed filter element to the head fully.
  4. Extra half turn by external mean to make sure there is no oil leakage during pump operation.

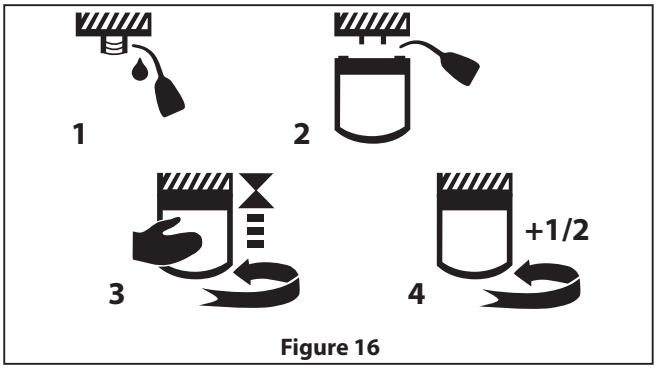

Figure 16

- Refill new oil to the Crankcase housing.

DISASSEMBLY OIL FILTRATION

- Ensure oil is drained from Crankcase housing (101) before disassembly.
- Loosen the compression fitting nuts (176, 129, 179) and remove tubing (177 and 178) from fittings.
- Remove the compression fittings (176) from oil filter (172).
- Remove the compression fitting (129) from Crankcase cap (102).
- Remove the compression fitting (179) from outlet of piston pump housing (155).
- Unscrew filter element (172) from filter head (171).
- Remove oil pump assembly (149).

ASSEMBLY OIL FILTRATION

- Reassemble parts in reverse order from the in a sequence in which they were removed.
- Look for deep scratches on surfaces, and nicks or cuts in "O" rings. Replace with new seals.
- Assemble oil pump assembly to the Crankcase housing (44).
- Assemble piston pump assembly (149) to oil pump return assembly. Ensure O-ring (151) is in place. Secure with socket head screws (150).
- Assemble Filter Head (171) to the oil filter bracket (173) and secure with hex head screws (174).
- Install 3/8" straight compression fittings (176) on both sides of filter head (172).
- Assemble filter element to the filter head.
- Assemble 3/8" straight compression fitting (179) to outlet of oil piston pump (155).
- Assemble 3/8" 90 degree compression fitting (129) to actuator cap (102).
- Assemble 3/8" OD metal tubing (177 and 178).

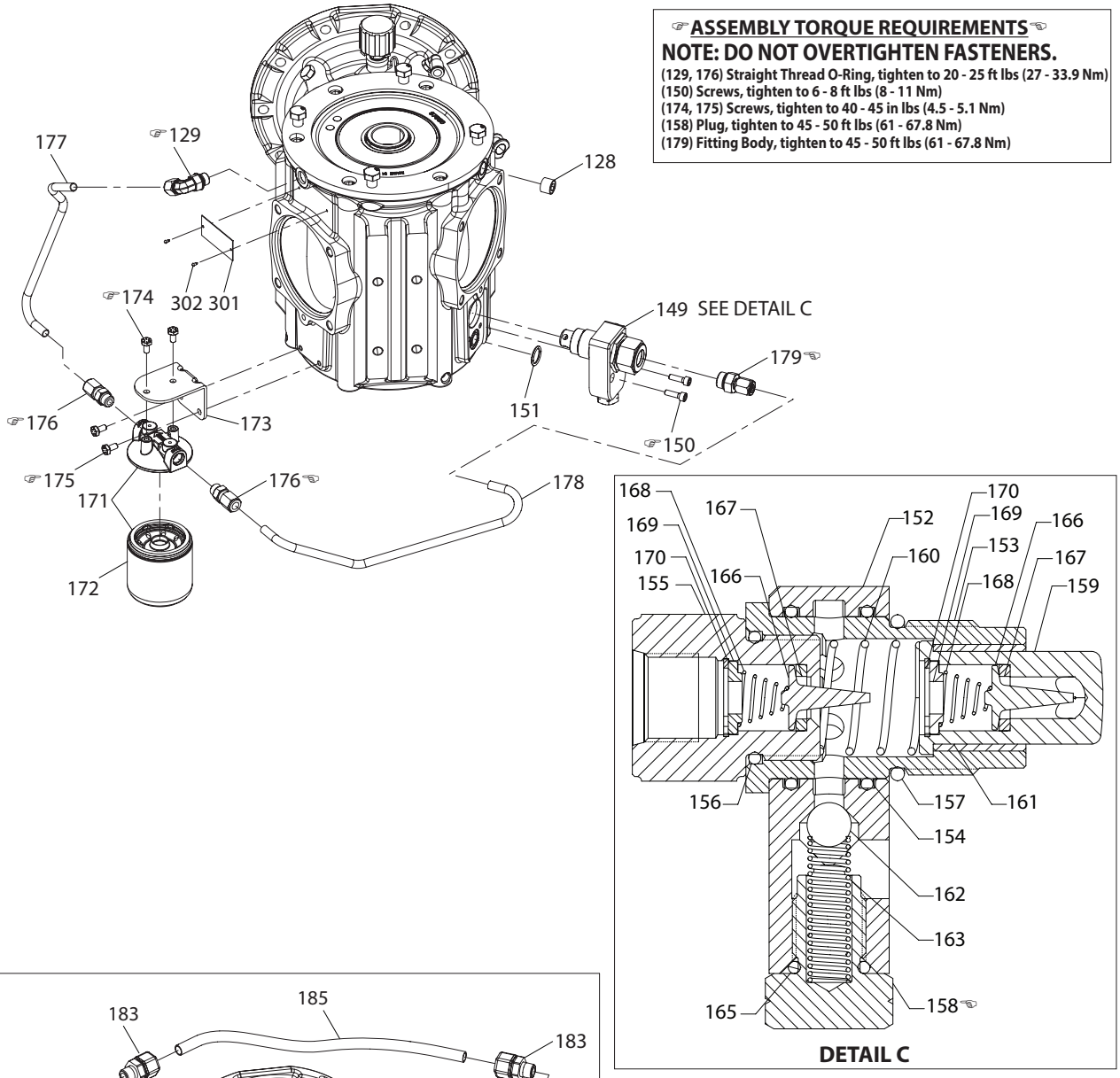
☞ASSEMBLY TORQUE REQUIREMENTS☜
NOTE: DO NOT OVERTIGHTEN FASTENERS.
(129, 176) Straight Thread O-Ring, tighten to 20 - 25 ft lbs (27 - 33.9 Nm)
(150) Screws, tighten to 6 - 8 ft lbs (8 - 11 Nm)
(174, 175) Screws, tighten to 40 - 45 in lbs (4.5 - 5.1 Nm)
(158) Plug, tighten to 45 - 50 ft lbs (61 - 67.8 Nm)
(179) Fitting Body, tighten to 45 - 50 ft lbs (61 - 67.8 Nm)
177
☞129
128
☞174
302 301
149 SEE DETAIL C
179☜
151
☞150
☞176
173
☞175
171
176☜
178
172
168
167
169
170
155
166
152
160
170
169
153
168
166
167
159
156
157
161
154
162
163
165
158☜
DETAIL C
183
185
183
126
127
189
188
187
182
184
181
NOTE: Items shown in crankcase parts list on page 33.

Figure 17

12. TROUBLESHOOTING

Issue	Possible Cause	Action
Pump will not operate	Improper power wiring: Mains to VFD, VFD to Motor.	See manual section 6 and 7 for proper wiring instructions.
	Improper sensor wiring: Leak detects, e-stop, motor thermal sensor, motor encoder.	See manual section 6 and 7 for proper wiring instructions and VFD settings.
	Improper control wiring: Analog, digital, or serial interfaces.	See manual section 6 and 7 for proper wiring instructions and VFD settings.
	Smart Setup not completed at VFD startup.	Complete Smart Setup. Quick Menu, Selection §4.
	VFD Alarm.	See VFD manual section 7.4 for list of alarm codes.
	Torque limit set too low.	Increase VFD parameter 4-16. Do not exceed 100%.
	Crankshaft bearing failure.	Replace pump Crankcase.
Erratic behavior or Excessive Noise / Knocking	Excessive wear of wrist pin and /or journal.	Replace wrist pin and journal.
	Excessive wear of piston rider band and/or wear ring.	Replace rider band and/or journal.
	Missing ball check or excessive ball check wear or failure.	Ensure ball checks are all installed, intact, and in place.
	System operating outside of NPSH requirements.	Ensure pump is running within NPSH requirements.
	Foreign particle stuck in inlet Manifold or ball check.	Ensure no solid particles over solid passing capability are passed through the pump.
Pump speed oscillating	Back pressure in system is varying and causing the pump to go in and out of torque limit.	Increase VFD parameter 4-16 if constant speed is desired. Do not exceed 100%.
	Leak detects are tripping and beginning to stop the pump but sensor looses contact with fluid before the pump comes to full stop and returns to commanded speed.	Ensure air caps and tubing are sufficiently cleaned after a Diaphragm failure increase filter timer on leak detect sensitivity if nuisance trips cannot be avoided.
Pump will not achieve pressure	Missing ball check or excessive ball check wear or failure.	Ensure ball checks are all installed, intact, and in place.
	Damage or failure of PRV bellows.	Replace PRV Bellows.
	Torque limit set too low.	Increase VFD parameter 4-16. Do not exceed 100%..
Pump will not achieve flow	Missing ball check or excessive ball check wear or failure.	Ensure ball checks are all installed, intact, and in place.
	Excessive back pressure is causing pump to go into torque limit and reducing speed.	Increase VFD parameter 4-16. Do not exceed 100%. Or decrease system back pressure.
Oil color turns black	Piston pump assembly is not functioning.	Bleed air from NPT plug on the top right side of oil pump housing
	Crankshaft cam is broken or damaged.	Replace Crankshaft cam.
	Oil filter element needs to be replaced and is in bypass mode.	Replace oil and filter.
Pre-Mature Diaphragm Failure	Fluid cap bolts or Diaphragm bolt loosened allowing air in between Diaphragms.	Use recommended torques for all fasteners. Re-torque all fluid section bolts prior to operation.
PRV Bellows Failure	Excessive and repeated rapid dead-heading (rapid valve closure).	Dead-head (down-stream valve closure) should be done in a smooth and controlled manner.
	Pump PRV used for maintain system pressure spikes or shocks.	Pump PRV does not replace need for system safety or relief devices. Install system protection.
Rubber Bellows Failure	Bellows not replaced with each Diaphragm change.	Replace rubber bellows with each Diaphragm replacement.
	Excessive oil leak at piston seal limits breathing of rubber bellows and can collect in bellows.	Replace piston seals and piston damaged.
Process Fluid Leak	Loose connections.	Use recommended torques for all fasteners. Re-torque all fluid section bolts prior to operation.
	Improper alignment of Manifolds, PRV, and fluid caps.	Follow recommended procedure from manual section 11.1 for proper alignment.
Excessive oil in outer section of lower cap, item 114	One or more of the reciprocating piston seals are worn or damaged.	Replace piston seal.
	Piston sealing surface is worn, scratched, or damaged.	Replace piston and seal.
	Excessive wear of piston wear ring or rider band.	Replace wear ring and rider band.
Excessive oil in inner section of lower cap, item 114	Shaft seal is worn or damaged.	Replace shaft seal.
VFD Alarm "A4" Mains Phase Loss	Loose power connection or power supply issue.	Ensure all wiring connections are secure and fully tightened. Check supply voltage and currents to the drive.
VFD Alarm "A61" Feedback Error	Motor is wired to run the wrong direction as determined by the encoder.	Change the motor direction by swapping any two phases in the motor terminal box.
VFD Alarm "W90" Feedback Monitor	Encoder is not wired correctly or is possibly damaged if power was supplied to signal wires.	Check for proper wiring and connections between the motor encoder and the VFD MCB 102 encoder card.

Please refer to Section 7 (page 44) of the VFD manual for additional VFD alarm descriptions.

12.1 Reset VFD to Factory Default Settings

If the VFD needs to be reset to pre-programmed factory default settings after making changes, a hard reset can be done.

1. Turn off the VFD using the mains disconnect switch on the front of the VFD.
2. Hold the"Status", OK and "Main Menu" buttons simultaneously.
3. Turn on the VFD using the mains disconnect switch.
4. Continue to hold the buttons until the VFD re-initializes.
5. Hit the "Reset" button to clear the re-initialization alarm.
6. Complete Smart Setup to select the correct language, motor size and motor type.
7. All settings are restored to factory defaults.

13.1 Pump With Motor

(Dimensions shown are for reference only, they are displayed in inches and millimeters (mm)).

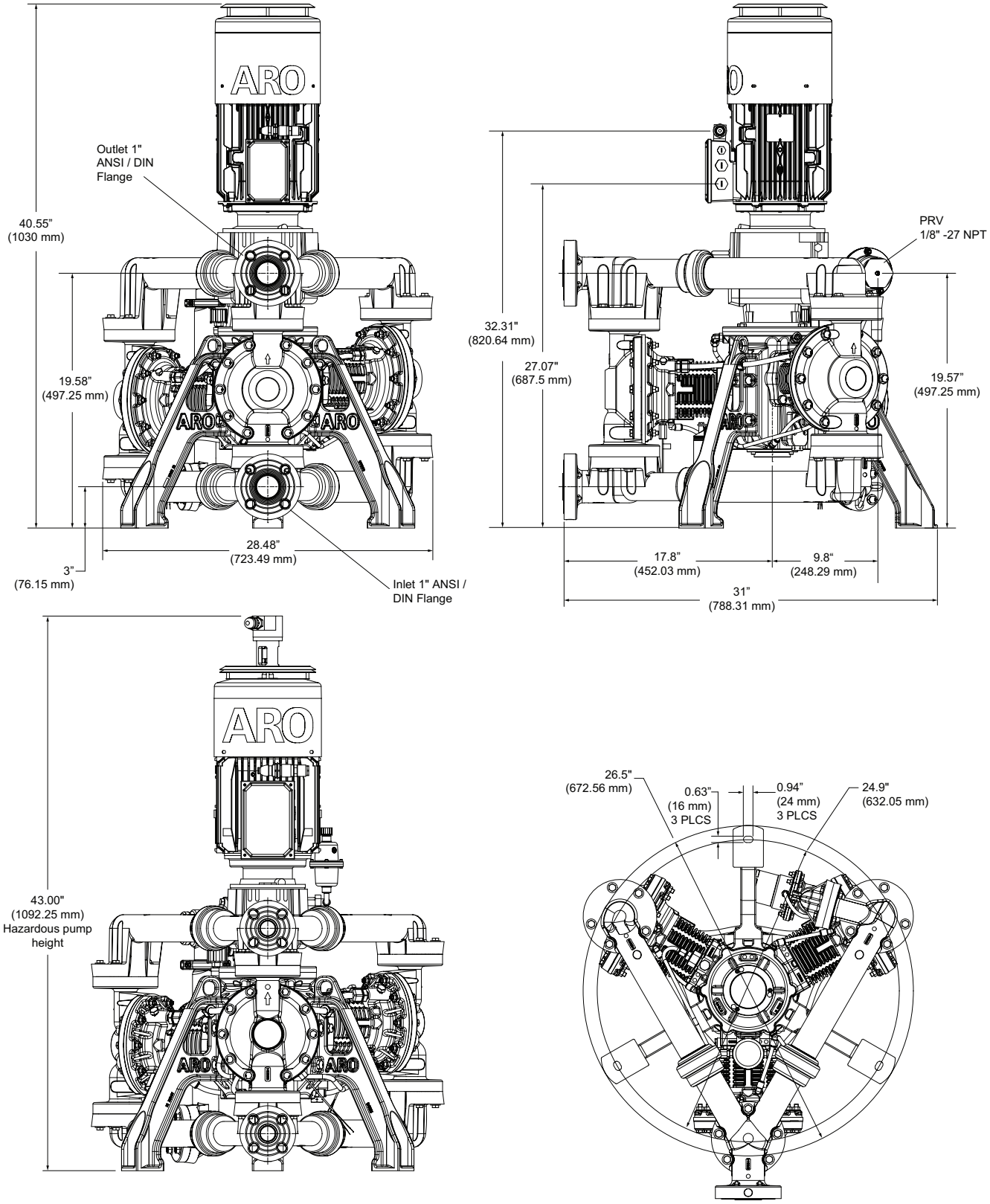

Figure 18

13.2. Variable Frequency Drive (VFD)

VARIABLE FREQUENCY DRIVE (VFD) A5 Frame Size

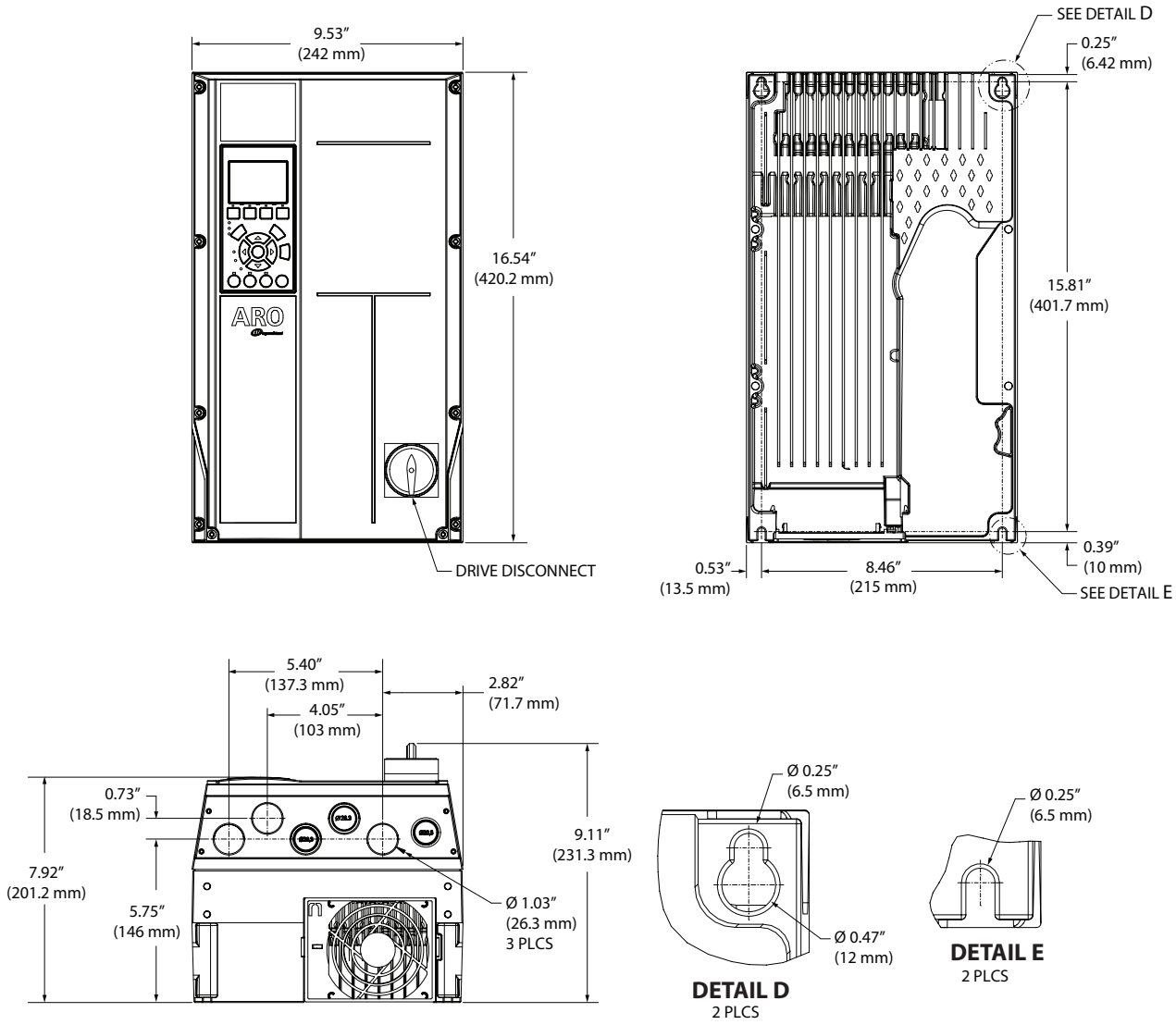

Figure 19

14. PERFORMANCE CURVE

EP10-PXXXX-XXX-XXA 1" EVO ELECTRIC DIAPHRAGM PUMP (NON-METALLIC FLUID SECTION)

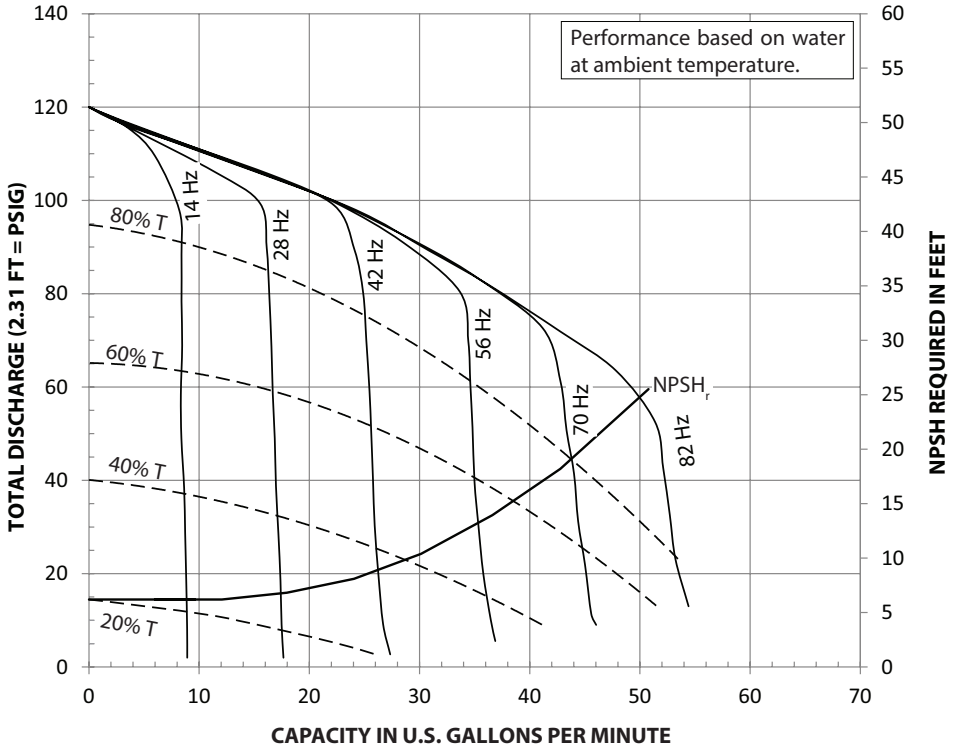

Drive Controls:
- Motor Frequency (Main Menu)
- Torque Limit (Menu 4 - 16)

Motor Frequency ≈ Flow

Torque limit ≈ Discharge Head

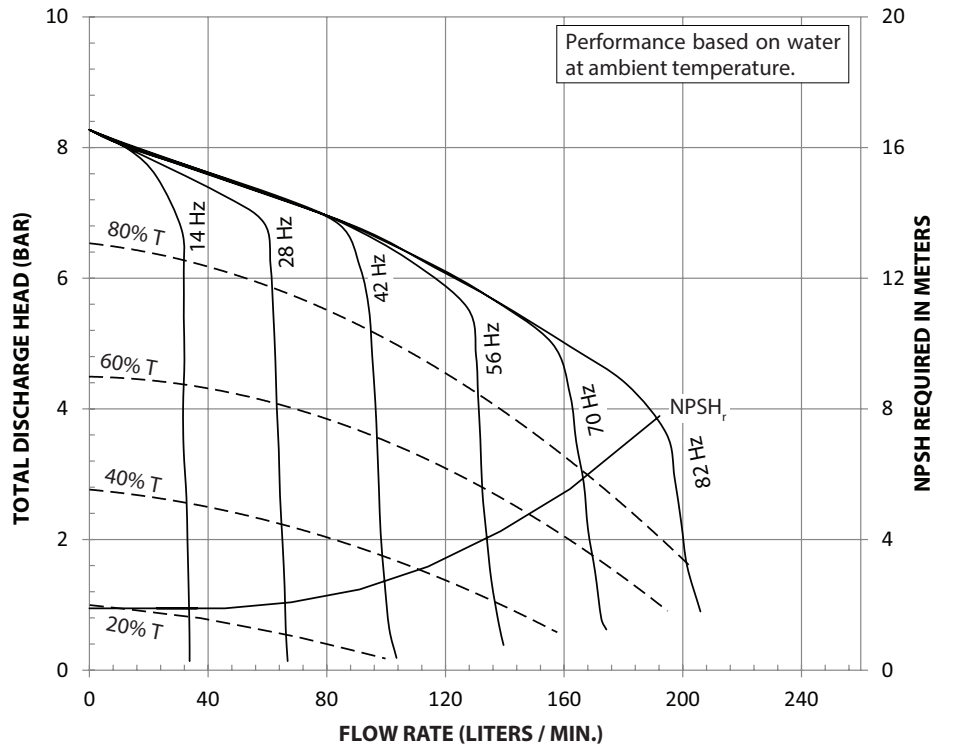

Drive Controls:
- Motor Frequency (Main Menu)
- Torque Limit (Menu 4 - 16)

Motor Frequency ≈ Flow

Torque limit ≈ Discharge Head

There are two primary VFD settings needed to navigate the pump operating map. The commanded frequency will control the pump speed (flow), and the motor torque limit (parameter 416) will limit the maximum torque that the motor will output which will in turn limit the pump pressure. The pump will run at the commanded speed until the backpressure in the system exceeds the motor torque limit shown by the horizontal dotted lines. When this happens, the pump will begin to de-rate its speed to maintain a constant torque output. This will continue until there is zero flow in the system, but full pressure. When the pressure downstream is reduced, the pump will speed up until the speed reaches its commanded frequency. To limit the pressure in the system, the torque limit can be set less than 100%. When backpressure builds, the pump will begin to de-rate its speed at a lower pressure where it intersects its respective curve for that given torque limit.

15. CERTIFICATION

15.1 Certification Standards and Markings

Description	Directive	Applicable Standards	Marking
EMC Directive	2014/30/EU	EN 61000 - 6 - 2:2005/AC:2005 EN 61000 - 4 - [2,3,4,5,6,8,11] EN 55011:2016/A1:2017/A11:2020 Group 1 Class A FCC Part 15 Subpart B ICES-001:Issue 5:2020 Chinese National Standard 13438 (2006) AS/NZS CISPR 11:2017	CE
Machinery Directive	2006/42/EC	EN ISO 12100:2010 EN 60204-1:2016 EN 809:1998 + A1:2009 UL 778 CSA C22.2 No.108-44 (R2019)	
RoHS Directive	2011/65/EU	EN IEC 63000:2018	
REACH Directive	1907/2006/EC		
ATEX Directive	2014/34/EU	EN ISO 80079 - 36:2016 EN ISO 80079 - 37:2016 EN IEC 60079 - 0:2018	Ex

See PN 97999-1972 (S-1639, Declaration of Conformity)

Overview of hazardous location markings:
The non-electrical Ex h protection type used for the pump system is constructional safety type 'c'.

ATEX Marking	Ex II 2G Ex h IIB T4 Gb II 2D Ex h IIIC T135°C Db	TPS 23 ATEX 116829 0002 X
IECEx Marking	Ex 60079-46 IIB T4 Gb Ex 60079-46 IIIC T135°C Db Ex h IIB T4 Gb Ex h IIIC T135°C Db	IECEx TPS 21.0037X
NEC / CEC Marking	CLASS 1 ZONE 1 AEx db IIB T4 Gb ZONE 21 AEx tb IIIC T135°C Db CLASS I DIV 2 GROUPS C-D T4 CLASS II DIV 2 GROUPS F-G T135°C	NRTL Pending

15.2 Specific Conditions of Use

1. Equipment must be installed following the requirements of IEC 60079-14 (latest version) and shall only be installed by qualified electricians experienced for electrical work in explosive atmospheres. The following clauses remain under the responsibility of the end user for the installation on site:
   - 6 Protection from dangerous (incendive) sparking
   - 7 Electrical protection
   - 8 Switch-off and electrical isolation
   - 9 Cable and wiring system
2. During installation, equipment must be internally and externally grounded. Refer to instructions & maintenance manual grounding information.
3. Ambient temperature range ($-18^0C \leq Temp \leq +40^0C$)
4. Maximum temperature of the process fluid:
   +100 ^{0}C for EPX0-XXXXX-XXX-XXA; where X = A, C, or S
   +79 ^{0}C for EPX0-XXXXX-XXX-XXA; where X = E
5. Thermal protective devices installed on each motor must shut down the pump in case of a thermal trip (150^0C). The thermal protective device cannot be used with an automatic reset function. The entire protective circuit must be installed according to SIL1 principles or higher. Upon initial operation, the protective circuits shall be functionally tested and at least once a year afterwards. The specific user instructions are given in Operator's Manual and are the responsibility of the end user.
6. Cable glands and plugs shall be selected in accordance with IEC 60079-0, IEC 60079-14 Table 10, EPL Gb/Db at the minimum.

16. WARRANTY DECLARATION

Ingersoll-Rand/ARO®, through its Reseller, warrants the products to be free of defects in material and workmanship as determined by ARO® inspection, within (24) TWENTY FOUR MONTHS from the date of placing the product in operation with the initial end customer or (26) TWENTY SIX MONTHS from the date of shipment, whichever occurs first. **Accordingly, the Warranty is not available for products purchased from unauthorized sellers, because IR cannot oversee or take action to correct product quality issues caused by unauthorized sellers**. This exclusion includes all products that are purchased from unauthorized sellers, including unauthorized Internet sites and unauthorized storefronts on online marketplaces.

Ingersoll-Rand/ARO® will provide a new part or repaired part, at its election, in place of any part which is found upon its inspection to be defective in material and workmanship during the period described above. Such part will be repaired or replaced without charge to the initial end customer during normal working hours at the place of business of a Reseller authorized to sell the type of Product involved or other establishment authorized by Company. Initial end customer must present proof of purchase (and purchase date) at the time of exercising this warranty and ship the product pre-paid authorized repair facility.

This warranty does not apply to wear parts, including but not limited to, pistons, oils, filters, diaphragms, balls, seats, washers, bellows, splines, PRV, bearings and/or manifolds without chemical attack/abrasion. This warranty also does not apply to failures occurring as a result of abuse, misuse, negligent repairs, corrosion, substitution of non-Ingersoll Rand / ARO® parts, erosion and normal wear and tear, alterations or modifications made to the Products without express written consent of Ingersoll-Rand/ARO®, or failure to follow the recommended operating practices and maintenance procedures as provided in the product's operating and maintenance publications.

THIS WARRANTY IS IN LIEU OF ALL OTHER WARRANTIES (EXCEPT OF TITLE), EXPRESSED OR IMPLIED, AND THERE ARE NO WARRANTIES OF MERCHANTABILITY OR OF FITNESS FOR A PARTICULAR PURPOSE.

The remedies of the initial end customer set forth under the provisions of warranty outlined above are exclusive. The total liability of Ingersoll-Rand/ARO®, or its Reseller, with respect to this sale or the Products and services furnished under this sale, in connection with the performance or breach of this warranty, or from the sale, delivery, installation, repair or technical direction covered by or furnished under this sale, whether based on contract, warranty, negligence, indemnity, strict liability or otherwise shall not exceed the purchase price of the unit or Products upon which such liability is based.

INGERSOLL RAND/ARO® AND ITS RESELLER SHALL IN NO EVENT BE LIABLE TO THE INITIAL END CUSTOMER, ANY SUCCESSORS IN INTEREST OR ANY BENEFICIARY OR ASSIGNEE RELATING TO THIS SALE FOR ANY CONSEQUENTIAL, INCIDENTAL, INDIRECT, SPECIAL OR PUNITIVE DAMAGES ARISING OUT OF THIS SALE OR ANY BREACH THEREOF, OR ANY DEFECTS IN, OR FAILURE OF, OR MALFUNCTION OF THE PRODUCTS UNDER THIS SALE WHETHER BASED UPON LOSS OF USE, LOST PROFITS OR REVENUE, INTEREST, LOST GOODWILL, WORK STOPPAGE, IMPAIRMENT OF OTHER GOODS, LOSS BY REASON OF SHUTDOWN OR NON-OPERATION, INCREASED EXPENSES OF OPERATION, COST OF PURCHASE OF REPLACEMENT POWER OR CLAIMS OF USER OR CUSTOMERS OF THE USER FOR SERVICE INTERRUPTION WHETHER OR NOT SUCH LOSS OR DAMAGE IS BASED ON CONTRACT, WARRANTY, NEGLIGENCE, INDEMNITY, STRICT LIABILITY OR OTHERWISE.

About Ingersoll Rand

Ingersoll Rand Inc. (NYSE:IR), driven by an entrepreneurial spirit and ownership mindset, is dedicated to helping make life better for our employees, customers and communities. Customers lean on us for our technology-driven excellence in mission-critical flow creation and industrial solutions across 40+ respected brands where our products and services excel in the most complex and harsh conditions.
Our employees develop customers for life through their daily commitment to expertise, productivity and efficiency. For more information, visit **www.IRCO.com**

In order to see updated information about ARO® or clarify any commercial or technical doubt, please visit **www.arozone.com**
All brands and models have been registered and patents applied for.
We reserve to the right to make changes without previous notice.
ARO® is a registered brand of Ingersoll Rand Company Inc. EVO SeriesTM is a trademark of Ingersoll Rand Company.

©2024 Ingersoll Rand. This material may not be reproduced without prior authorization.

We are committed to using environmentally conscious print practices

ARO Ingersoll Rand