CALL TOLL FREE 877-742-2878 FOR SALES AND SUPPORT RETURN TO BurtProcess.com

ANSI DIMENSIONAL ETFE-LINED MAGNETIC DRIVE PUMPS

ULTRACHEM®





PUMPING SOLUTIONS **AROUND THE WORLD**

FINISH THOMPSON INC.

finishthompson.com

FINISH THOMPSON INC.

Every pump is tested against the customer's duty point and hydro-tested.

Every pump is shipped with its specific curve at no additional cost.



ULTRA RELIABLE

Engineered for extreme reliability in the most extreme chemical processing applications, ULTRAChem® is a magnetically driven, ANSI dimensional pump. It is constructed from tough ductile iron with DuPont Tefzel® (ETFE) lining for superior corrosion resistance.

ULTRA DURABLE

Industry's lowest radial loads are the result of a modified concentric volute or partial splitter casing depending upon model, fully supported shaft and self-aligning dual bushings designed for optimum alignment preventing premature wear. Careful design balances axial forces inside the pump controlling excess thrust loads. Complete encapsulation of inner drive magnets in ETFE ensures ultimate corrosion protection. These are just some of the features designed into the ULTRAChem Series pumps to ensure optimum pump life.

ULTRA SEALLESS

Powerful neodymium magnets drive the impeller through a carbon-filled ETFE lined barrier for dependable, leak-free operation with no environmental emissions, no power-robbing double mechanical seals and no seal support systems.

UC SERIES SPECIFICATIONS

- **Max. Working Pressure:** to 300 psi (20 Bar)
- **Max. Temp.:** 250°F (121°C)
- **Max. Viscocity:** over 200 cP
- **Specific Gravity:** Over 1.8
- **Casing:** ANSI/ASME B73.1m & 73.3
- **Flanges:** ANSI, ISO/DIN
- **Certifications:** CE, ATEX
- **Motor Frames:**
  NEMA: 143 through 365
  IEC: 90 through 225
  Bearing frame
  Gas engine

2 YEAR WARRANTY

Backed by a two-year warranty



UC SERIES APPLICATIONS

- Chemical Processes
- Steel Processing
- Water & Wastewater
- Electronics Manufacturing
- Surface Finishing
- Paper Mills
- Biofuels
- Fume Scrubbing
- Metal Plating
- Pharmaceutical

TYPICAL CHEMICALS

Sodium hydroxide, sulfuric acid, hydrochloric acid, sodium hypochlorite, plating solutions, corrosive blends, wastewater and solvents.

Tefzel® is a registered trademark of E. I. duPont de Nemours and Company.

UC COVERAGE CURVE 3500/2900 RPM

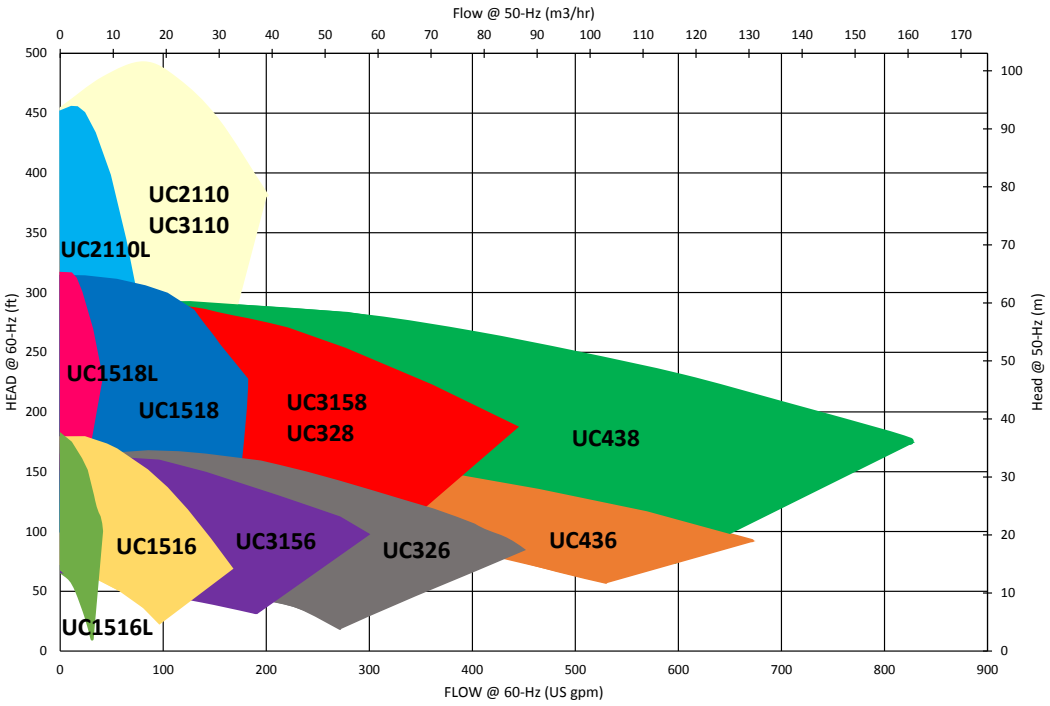

- UC438
- UC436
- UC328
- UC326
- UC326H
- UC3158
- UC3156
- UC3110
- UC2110
- UC2110L
- UC1518
- UC1518L
- UC1516
- UC1516L

The centrifugal selector program is designed to allow you to easily search Finish Thompson's collection of centrifugal pumps to find the products that most closely match your hydraulic and application criteria.

ONLINE PUMP SELECTOR CENTRIFUGAL PUMPS

UC COVERAGE CURVE 1750/1450 RPM

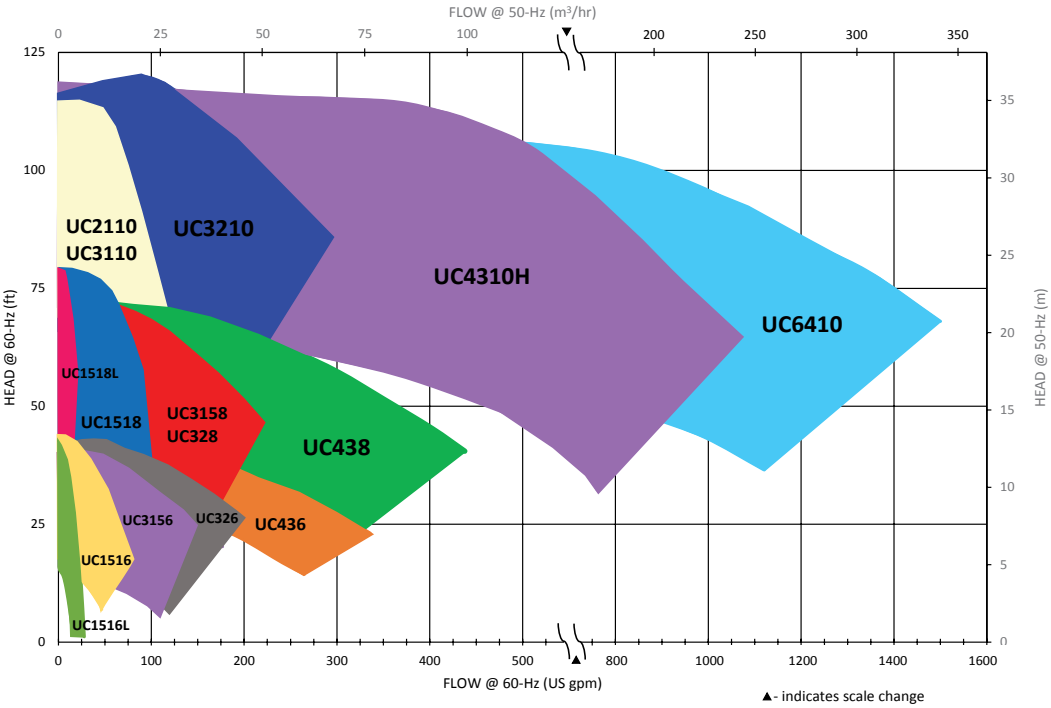

- UC6410
- UC4310H
- UC438
- UC436
- UC328
- UC326
- UC326H
- UC3210
- UC3158
- UC3156
- UC3110
- UC2110
- UC2110L
- UC1518
- UC1518L
- UC1516
- UC1516L

EXPLODED VIEW & MATERIAL OPTIONS



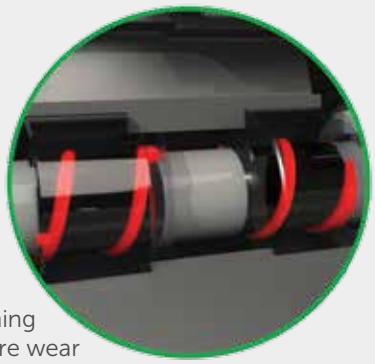

Dual Bushings

Dual bushings reduce stress by 1/3. Self-aligning design avoids premature wear due to bushing misalignment. Spiral groove pathway enhances fluid flow with a pumping action for the best cooling



Rugged Shaft

A single geometry, high strength, simply supported shaft for maximum durability. Shaft is supported in both the front and the back of the pump resulting in virtually no deflection like can be potentially found in cantilevered designs.

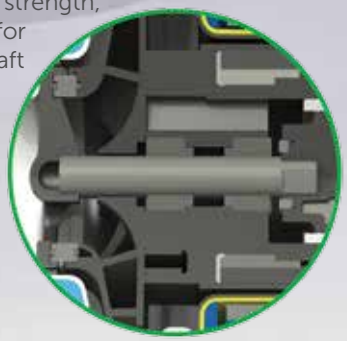

1 CASING, SHAFT SUPPORT, FRONT THRUST RING
Cast ductile iron with Tefzel® lining, carbon fiber reinforced ETFE, alpha sintered silicon carbide

2 IMPELLER ASSEMBLY, IMPELLER THRUST RING, IMPELLER DRIVE HUB, BUSHINGS
Carbon fiber reinforced ETFE, Fluorosint® or alpha sintered SiC, neodymium iron boron magnets, SiC (carbon or Dri-Coat SiC optional)

3 SHAFT, HOUSING O-RING
Alpha sintered SiC (Dri-Coat SiC optional), FKM (EPDM, Kalrez®, Simriz®, FEP encapsulated FKM optional)



Magnet Encapsulation

High strength magnets are completely encapsulated and hermetically sealed by a single shot ETFE molding process for complete corrosion protection. Each inner drive is vacuum tested to ensure quality and reliability.



Vapor Protection Package

Three non-wetted O-rings help protect the outer drive and motor face from exposure to corrosive vapors.



4

5

6



7

Easy Set Outer Drive

Hub has Easy Set Drive feature to ensure perfect magnet alignment and easy installation. No measuring required! Simply slide drive onto motor shaft until it is against the locating ring.



High Strength Barrier

Wetted interior is injection molded from ETFE for optimum chemical resistance. Non-wetted exterior shell is manufactured from compression molded vinyl ester/glass fiber or epoxy resin/Kevlar® for superior strength. The two pieces are bonded together and suitable for vacuum service applications.

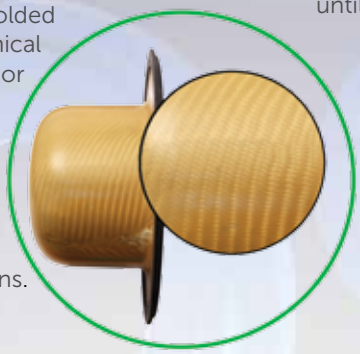

4 REAR SEALING RING, BARRIER, REAR THRUST RING,
Moly-filled PTFE, molded CFR-ETFE liner with woven glass-filled vinyl ester or epoxy resin/Kevlar® external shell, high purity ceramic or alpha sintered SiC

5 CLAMP RING
Ductile iron

6 DRIVE ASSEMBLY
Nickel-plated neodymium iron boron magnets/ductile iron

7 MOTOR ADAPTER
Heavy duty ductile iron

Kalrez® and Kevlar® are a registered trademarks of DuPont Performance Elastomers.
Simriz® Perfluoroelastomer is a registered trademark of the Simrit® division of Freudenberg-NOK.
Fluorosint® is a registered trademark of Quadrant DSM Engineering Plastic Products.

ULTRACHEM THRUST AND INTERNAL CIRCULATION

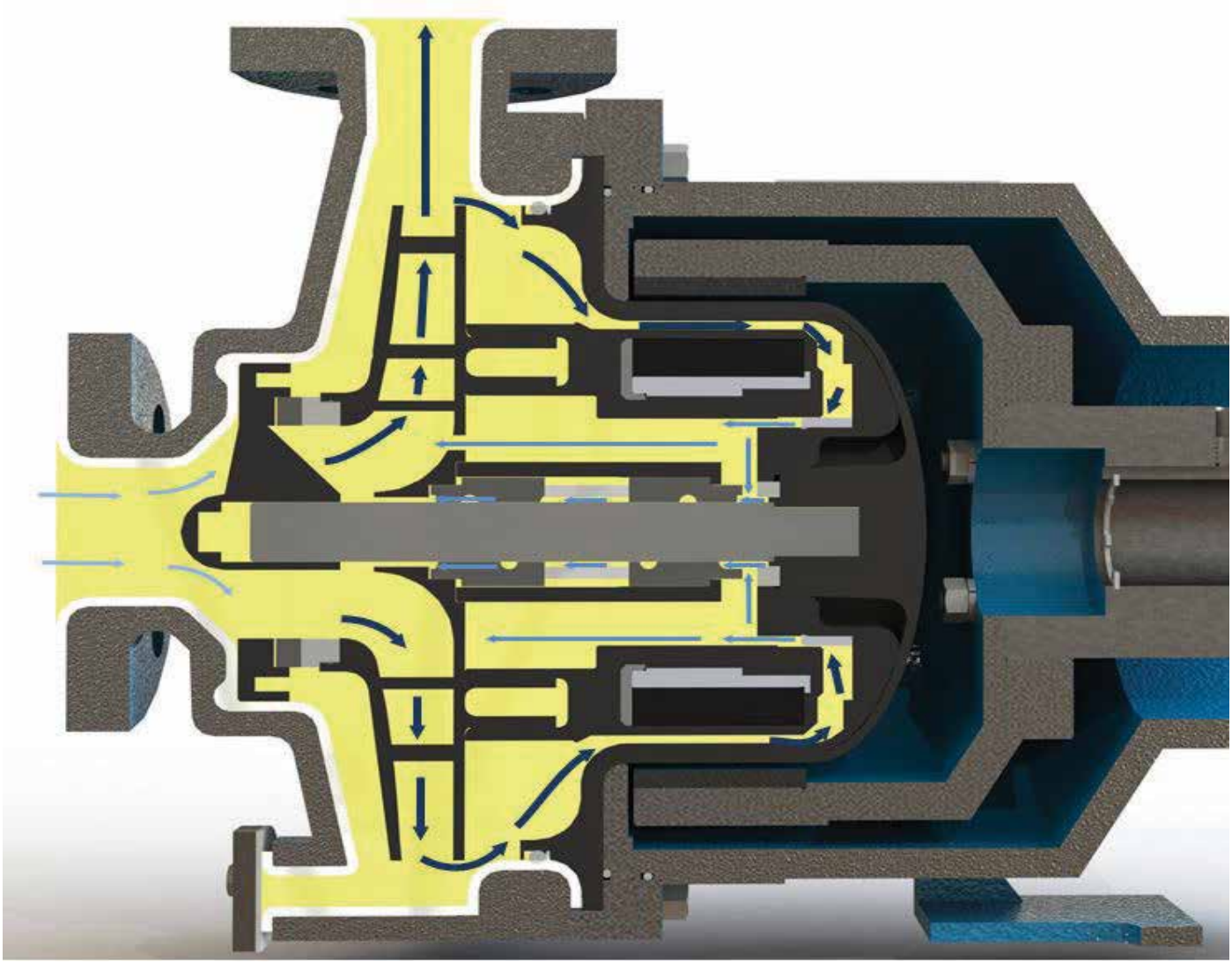

Unlike conventional sealed centrifugal pumps, the hydraulic radial and axial thrust loads must be absorbed internally by a magnetic drive pump. The UC Series has been engineered to reduce these loads in order to maximize the wear life of the components. The shaft and bushings are designed for minimal shaft stress and deflection. The axial loads are primarily balanced by a rear radial sealing ring.

The liquid enters the pump at suction pressure (**light blue arrows**) and is accelerated in the impeller, gaining velocity head. The liquid then decelerates in the housing where much of the velocity head is converted into static pressure (**dark blue arrows**) before exiting through the discharge.

Some of the pressurized liquid flows to the rear of the impeller drive and proceeds through an annular orifice (**medium blue arrows**) formed between the inner magnetic drive bore and a stationary sealing ring on the barrier liner. The size of the orifice, bushing groove and impeller balance holes (some sizes) are designed to minimize axial thrust as well as provide fluid to lubricate and cool the shaft / bushing interface.

After exiting the orifice, the flow splits with some going through the bushing to the pump suction (this flow is enhanced by the spiral shape of the bushing groove acting as a small pumping ring) and the remainder flows through the impeller balance holes (some sizes) to the pump suction.

REPLACEABLE WEAR PARTS



All wear parts are made from highly corrosion resistant materials and are able to withstand repeated use in chemical applications. They are easily field replaceable.

REPLACEABLE WEAR PARTS:

- **SHAFT**
  Replaceable alpha sintered silicon carbide (Dri-coat alpha sintered silicon carbide optional)
- **BUSHINGS**
  Alpha sintered silicon carbide bushings (Carbon bushing or dri-coat alpha sintered silicon carbide bushing optional)
- **O-RING**
  FKM, EPDM, Kalrez®, Simriz®
- **FRONT THRUST RING**
  Alpha sintered silicon carbide
- **REAR SEALING RING**
  Molybdenum disulfide filled PTFE
- **IMPELLER THRUST RING**
  Fluorosint® or alpha sintered silicon carbide

Contact Finish Thompson for more information.

ACCESSORIES

Digital Power Monitor

Tank unloading/emptying, vortexing, startup errors and system upset all can result in run dry conditions.
A power monitor is programmed to use the pump's motor as a sensor to almost instantly sense a drop in power when a pump runs dry and can quickly shut the pump down before damage can occur. It monitors the power used only by the pump and eliminates losses in the motor.



Available in: 1 phase 100-240 VAC; 3 phase 100-240 VAC; 3 phase 380-500 VAC and 3 phase 500-690 VAC

Base Plates

Provides a sturdy mounting for the pump/motor

Raises pump off floor to reduce exposure to corrosive liquids.



Available in epoxy painted steel, fiberglass and 316L stainless steel (UCI models only). Factory mounting includes stainless steel hardware and shims.

Dri-Coat Option

Dri-Coat Technology gives silicon carbide components the ability to run dry for brief periods. An advanced coating technique deposits a thin layer of specialized carbon over the silicon carbide bushings and shaft. The resulting diamond-like coating (DLC) is very hard, chemically inert and has a very low coefficient of friction, which provides run dry protection.



UC with Long-Coupled Bearing Frame

Utilizes pump bearing frame and flex coupling between pump and motor.

- Cost-effective replacement for troublesome sealed pumps by allowing use of existing motors
- ANSI dimensional design provides drop in replacement
- Ideal when isolated pump from motor drive is desired
- Allows use of alternative drives such as non-C face, DC, air, pulley or hydraulic



Fabricated Steel Baseplate

Bronze Bump Ring

When added to the motor adapter, this option provides a non-sparking surface making the pump suitable for applications in hazardous areas. With this option the pump is ATEX certified and meets the requirements of Group II, Category 2 equipment.



MODIFIED CONCENTRIC VOLUTE, PARTIAL SPLITTER, & CONVENTIONAL VOLUTE

Finish Thompson uses a variety of housing styles to help control radial load. The method chosen by our engineers is dependent upon the pump's internal design and each work equally well. The result is the pump can be operated at any flow rate across the performance curve without increasing radial loads.

MODIFIED CONCENTRIC VOLUTE

Models UC1516/1516L/1518/1518L/2110/2110L/3110/3156/3158/326/326H/328/3210



- The modified concentric volute housing shape is nearly circular.
- This allows the pressure on the periphery of the impeller to be uniform.
- This reduces radial load to very low levels at all flows.



PARTIAL SPLITTER

MODELS UC436/438



- The partial splitter is a wall in the housing that allows the pressure to be balanced by creating equal and opposing pressure resulting in a very low radial load.
- This design is used on certain medium to high flow pumps and helps control radial load to very low levels at all flows
- The partial splitter is unique to Finish Thompson; no other lined mag-drive pump company offers this feature.



CONVENTIONAL VOLUTE

MODELS UC4310H/6410



- The conventional volute is used on high flow pumps designed for operation at 4-pole motor speeds or lower.
- The volute design at these speeds inherently has very low radial loads at all flows.
- This geometry provides maximum hydraulic efficiency.



MODULAR DESIGN

The modular design of the UC Series pumps provides:

- Maximum Flexibility - Two piece impeller, inner drive magnet and outer drive magnet can be separated
- Lower Inventory Cost - Common replaceable parts for pumps in the same group.
- Ease of Repair - Simplifies maintenance with individually replaceable, lower cost wear parts and requires no special tools or heat welding.



Two Piece Impeller

Impeller is securely mounted to inner drive magnet with a tapered press fit and easily replaced in the field.

- Eliminates need to purchase expensive single piece impeller magnet assembly.
- Easy to change impeller diameters at lower cost.
- Impeller thrust ring is field replaceable.
- Allows a pump end to be converted to fit multiple applications.

Motor Adapter

Motor adapter fits multiple motor frame sizes.

- Eliminates the need for specialized individual motor adapter flanges.
- Simplifies installation and inventory.
- Optional bronze bump ring makes it suitable for hazardous areas and is ATEX certified providing maximum safety.
- Two jack screws facilitate assembly and disassembly.
- Features Vapor Protection Package.





Outer Drive Magnet/Shaft Adapters

Dynamically balanced outer drive magnet assembly is fitted securely to the shaft adapter with four bolts on all sizes.

- Single drive magnet fits multiple motor shaft adapters.
- Adapters are machined to fit each motor shaft diameter.
- All shaft adapters feature Easy Set Drive and alignment studs for ease of assembly.
- Easily identifiable multiple pole drive magnets match strength to motor power reducing cost.

DIMENSIONS & HORSEPOWER

FRONT VIEW All models

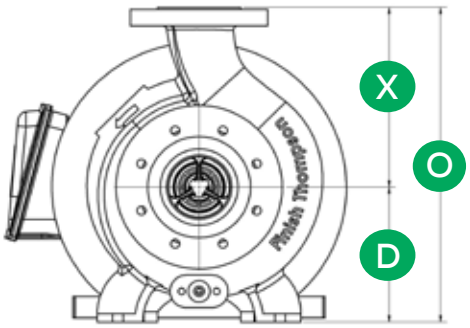

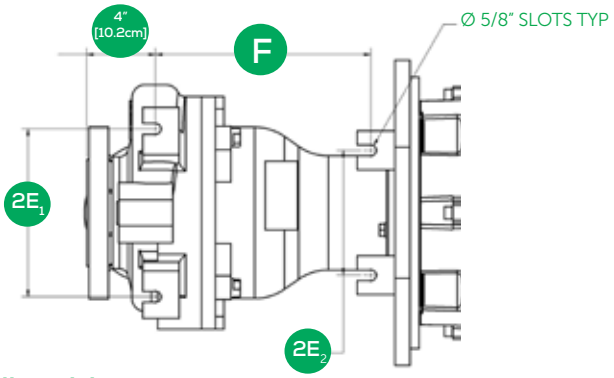

SIDE VIEW All models

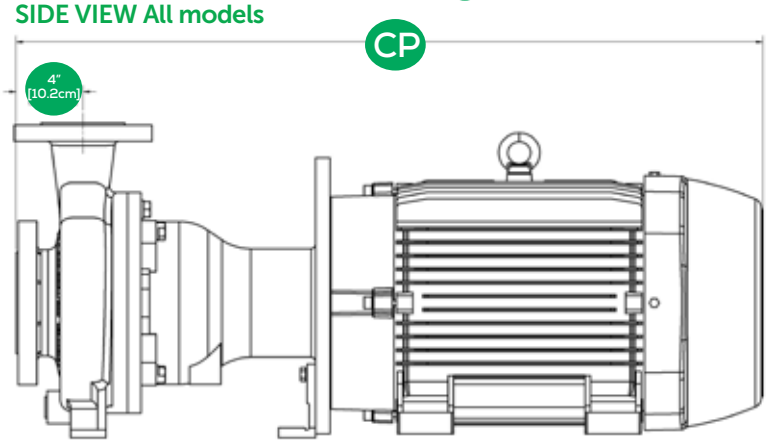

UCI MODELS

UC1516/1516L, UC1518/1518L, UC3156, UC326/326H

MOTOR FRAMES	CP (APPROX.)	
	(in)	(mm)
NEMA		
143/145TC	23-17/32	598
182/184TC	28-3/32	713
213/215TC	31-5/32	791
254/256TC	34-9/32	871
284/286TSC	36-11/16	932
IEC		
90	23-19/32	599
100/112	25-1/32	636
132	31-3/32	790
160	34-27/32	885

MODEL	MAXIMUM POWER hp (kW)
UC1516/1516L	30 (22)
UC1518/UC1518L	30 (22)
UC2110/2110L	75 (55)
UC3110	75 (55)
UC3156	30 (22)
UC3158	75 (55)
UC326/326H	30 (22)
UC328	75 (55)
UC436	75 (55)
UC438	75 (55)
UC4310H	40 (30)*
UC6410	40 (30)*

*4-pole motors only

UCII MODELS

UC2110/2110L, UC3110, UC3158, UC328, UC3210, UC436, UC438, UC4310H, UC6410

MOTOR FRAMES	CP (APPROX.)	
	(in)	(mm)
NEMA		
143-145TC	27-11/16	703
182/184TC	29-9/16	751
213/215TC	32-5/8	829
254/256TC	37-1/2	953
282/284TC/TSC	39-27/32	1012
324/326TC/TSC	44-21/32	1134
364/365TC/TSC	46-27/32	1190
IEC		
90	27-15/32	698
100/112	28-29/32	734
132	32-9/16	827
160	38-9/32	972
180	40-9/16	1030
200	43-3/32	1095
225	46-21/32	1185

Note: For additional dimensions, please refer to outline dimensional drawings for all models located on our website.

DIMENSIONS

MODEL	SUCTION in (mm)	DISCHARGE in (mm)	ANSI NO.	O in (mm)	D in (mm)	X in (mm)	$2E_1$ in (mm)	$2E_2$ in (mm)	F in (mm)	SLOT QTY	SLOT DIAMETER in (mm)
UC1516	1-1/2 (38)	1 (25)	AA	11-3/4 (298)	5-1/4 (133)	6-1/2 (165)	6 (152)	-	7-19/32 (193)	3	5/8 (16)
UC1516L	1-1/2 (38)	1 (25)	AA	11-3/4 (298)	5-1/4 (133)	6-1/2 (165)	6 (152)	-	7-19/32 (193)	3	5/8 (16)
UC1518	1-1/2 (38)	1 (25)	AA	11-3/4 (298)	5-1/4 (133)	6-1/2 (165)	6 (152)	-	7-19/32 (193)	3	5/8 (16)
UC1518L	1-1/2 (38)	1 (25)	AA	11-3/4 (298)	5-1/4 (133)	6-1/2 (165)	6 (152)	-	7-19/32 (193)	3	5/8 (16)
UC2110	2 (50)	1 (25)	A05	16-3/4 (425)	8-1/4 (210)	8-1/2 (216)	9-3/4 (248)	7-1/4 (184)	12-1/2 (318)	4	5/8 (16)
UC2110L	2 (50)	1 (25)	A05	16-3/4 (425)	8-1/4 (210)	8-1/2 (216)	9-3/4 (248)	7-1/4 (184)	12-1/2 (318)	4	5/8 (16)
UC3110	3 (76)	1 (25)	--	16-3/4 (425)	8-1/4 (210)	8-1/2 (216)	9-3/4 (248)	7-1/4 (184)	12-1/2 (318)	4	5/8 (16)
UC3156	3 (76)	1-1/2 (38)	AA	11-3/4 (298)	5-1/4 (133)	6-1/2 (165)	6 (152)	-	7-19/32 (193)	3	5/8 (16)
UC3158	3 (76)	1-1/2 (38)	A50	16-3/4 (425)	8-1/4 (210)	8-1/2 (216)	9-3/4 (248)	7-1/4 (184)	12-1/2 (318)	4	5/8 (16)
UC326	3 (76)	2 (50)	--	11-3/4 (298)	5-1/4 (133)	6-1/2 (165)	6 (152)	-	7-19/32 (193)	3	5/8 (16)
UC326H	3 (76)	2 (50)	A10	16-1/2 (419)	8-1/4 (210)	8-1/4 (210)	9-3/4 (248)	7-1/4 (184)	12-11/32 (314)	4	5/8 (16)
UC328	3 (76)	2 (50)	A60	17-3/4 (450)	8-1/4 (210)	9-1/2 (241)	9-3/4 (248)	7-1/4 (184)	12-1/2 (318)	4	5/8 (16)
UC3210	3 (76)	2 (50)	A60	17-3/4 (450)	8-1/4 (210)	9-1/2 (241)	9-3/4 (248)	7-1/4 (184)	12-15/32 (317)	4	5/8 (16)
UC436	4 (102)	3 (76)	--	16-3/4 (425)	8-1/4 (210)	8-1/2 (216)	9-3/4 (248)	7-1/4 (184)	12-1/2 (318)	4	5/8 (16)
UC438	4 (102)	3 (76)	A70	19-1/4 (489)	8-1/4 (210)	11 (279)	9-3/4 (248)	7-1/4 (184)	12-1/2 (318)	4	5/8 (16)
UC4310H	4 (102)	3 (76)	A70	19-1/4 (489)	8-1/4 (210)	11 (279)	9-3/4 (248)	7-1/4 (184)	12-1/2 (318)	4	5/8 (16)
UC6410	6 (152)	4 (102)	A80	23-1/2 (597)	10 (254)	13-1/2 (343)	9-3/4 (248)	7-1/4 (184)	12-1/2 (318)	4	5/8 (16)



FINISH THOMPSON INC.

OTHER GREAT PRODUCTS FROM FINISH THOMPSON



DB & SP SERIES
PREMIUM MAGNETIC DRIVE SEALLESS CENTRIFUGAL PUMPS



VKC SERIES
VERTICAL MAGNETIC DRIVE SEALLESS CENTRIFUGAL PUMPS



DRUM/BARREL
PORTABLE FLUID TRANSFER SOLUTIONS



GP SERIES
SEALED PLASTIC CENTRIFUGAL PUMPS



AP SERIES
SEALED STAINLESS STEEL CENTRIFUGAL PUMPS



MSKC SERIES
MULTI-STAGE MAGNETIC DRIVE SEALLESS CENTRIFUGAL PUMPS

PUMP FIT

AFTERMARKET AODD PUMP REPLACEMENT PARTS

fti AIR

PREMIUM AODD PUMPS

fti

finishthompson.com

FINISH THOMPSON INC. - HEADQUARTERS
921 Greengarden Road | Erie, PA 16501
800.934.9384 | ph 814.455.4478 | fx 814.455.8518
email fti@finishthompson.com

FINISH THOMPSON INC. - EUROPE CENTER
Otto-Hahn-Strasse 16 | Maintal, D-63477 Germany
49 (0)6181-90878-0 | fx 49 (0)6181-90878-18
email fti@finishthompson.com