CHEMFLO 3 CC

2" x 1-1/2" End Suction Centrifugal Pump

Made with high quality investment cast 316 stainless steel components, the ChemFlo® series of pumps are designed to be applied in a wide range of pumping applications where stainless steel is required.

The ChemFlo® 3 pumps utilize a semi-open impeller design to allow for passage of larger solid sizes than similar sized enclosed impellers. Several seal options are available in additon to the standard type 2100 carbon / ceramic / Viton mechanical seal.

ChemFlo® 3 pumps are offered in two configurations, pump (with motor) and PumPAK® (without motor) versions. Electric and hydraulic motors can be close coupled to ChemFlo® 3 pumps or pedestal mounted versions are also available for long coupling.

Further expanding the versatility of the ChemFlo® series is the CFB 3 pump, a ChemFlo® 3 in NiBrAl material. All wetted parts are produced in CA 958 nickel aluminum bronze including the drive sleeve to maximize corrosion protection in seawater applications.

If ordering a pumpak with a 145TC please note that the electric motor must have a base.

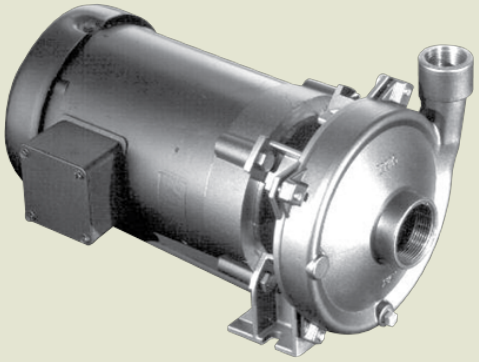

Application

- Agricultural
- Commercial
- Industrial
- Marine
- OEM

Drive Sleeve

- 316 SS

SPECIFICATIONS:

Suction And Discharge	2" x 1-1/2" NPT
Materials Of Construction	316 stainless steel, CFB (nickel aluminum bronze)
Flow	Up to 125 GPM
Head Feet	Up to 125'
Impeller	5.25" semi-open, cast 316 SS
Motor	Up to 3 HP
Drive Options	Close coupled 56C, Close coupled 145TC, Close coupled 184C, Pedestal, PumPAK® (without motor)
Seal	Special seal material combinations available (consult factory), Standard carbon / ceramic / Viton
Options	Hydraulic motor .22 cu. in., Hydraulic motor .37 cu. in., Tap for recirculation or seal flush

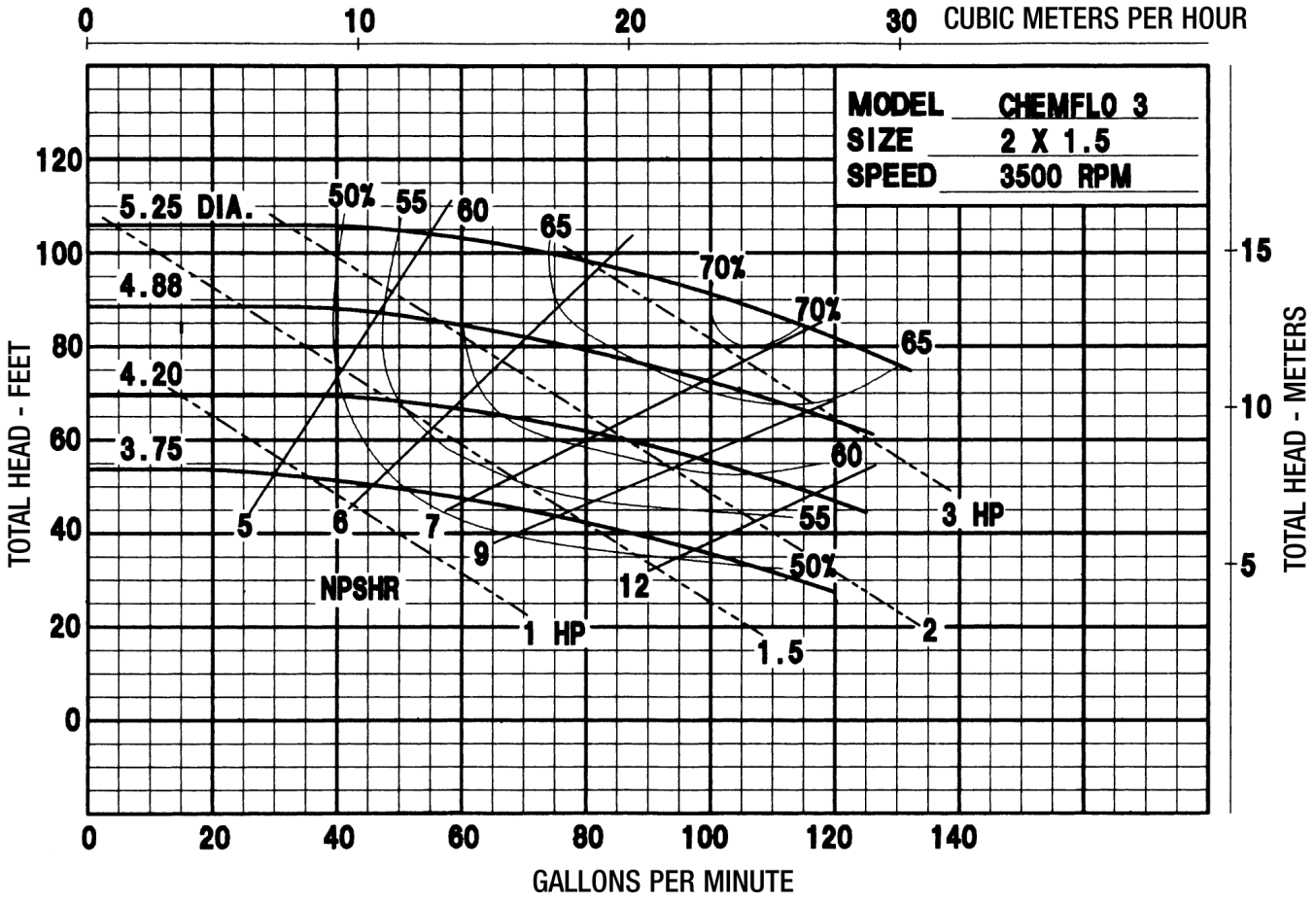

34800 BENNETT - FRASER, MI 48026-1686
(586) 293-8240 - FAX (586) 293-8469
(800) 563-8006 - www.mppumps.com

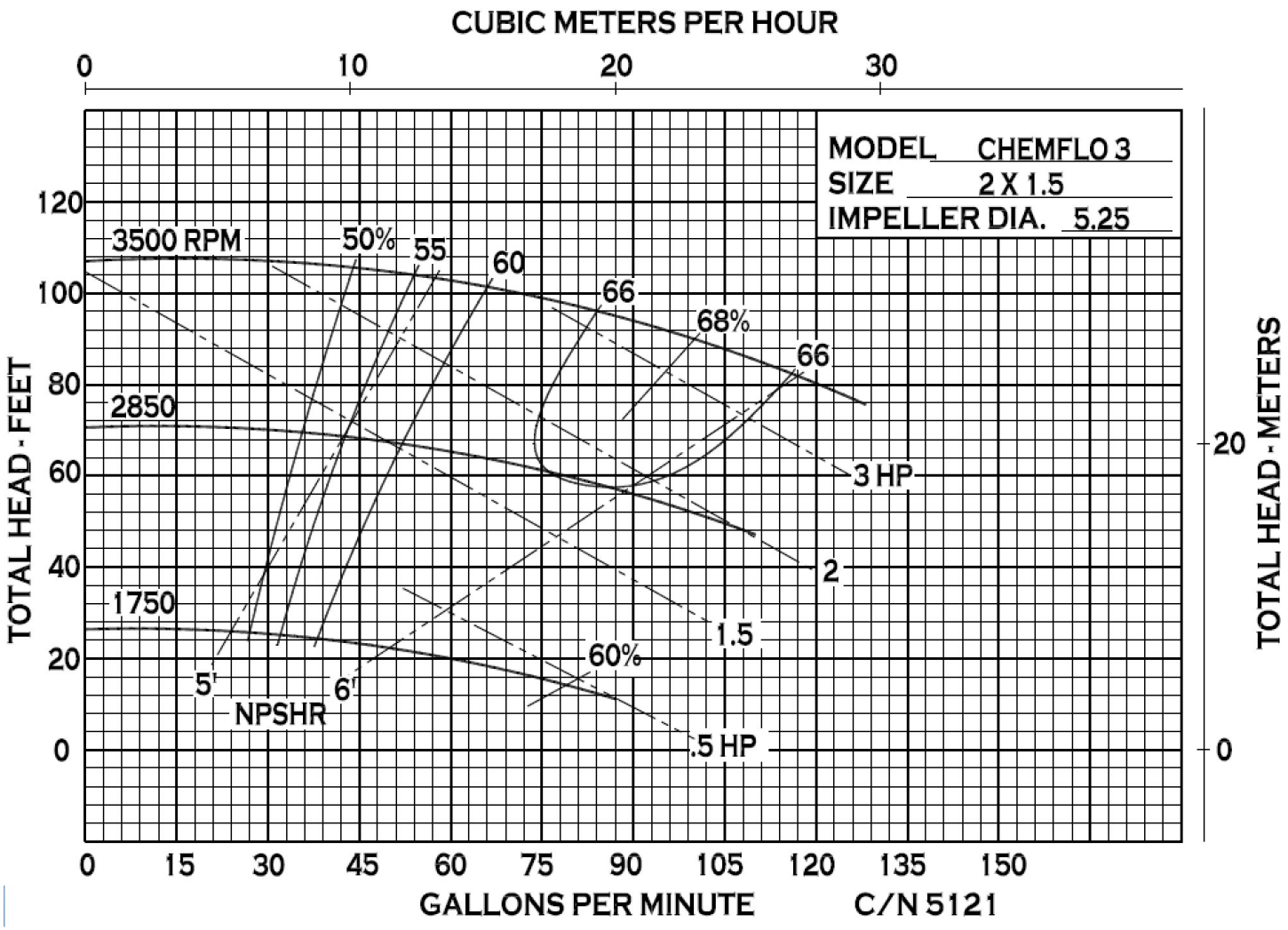

34800 BENNETT - FRASER, MI 48026-1686
(586) 293-8240 - FAX (586) 293-8469
(800) 563-8006 - www.mppumps.com

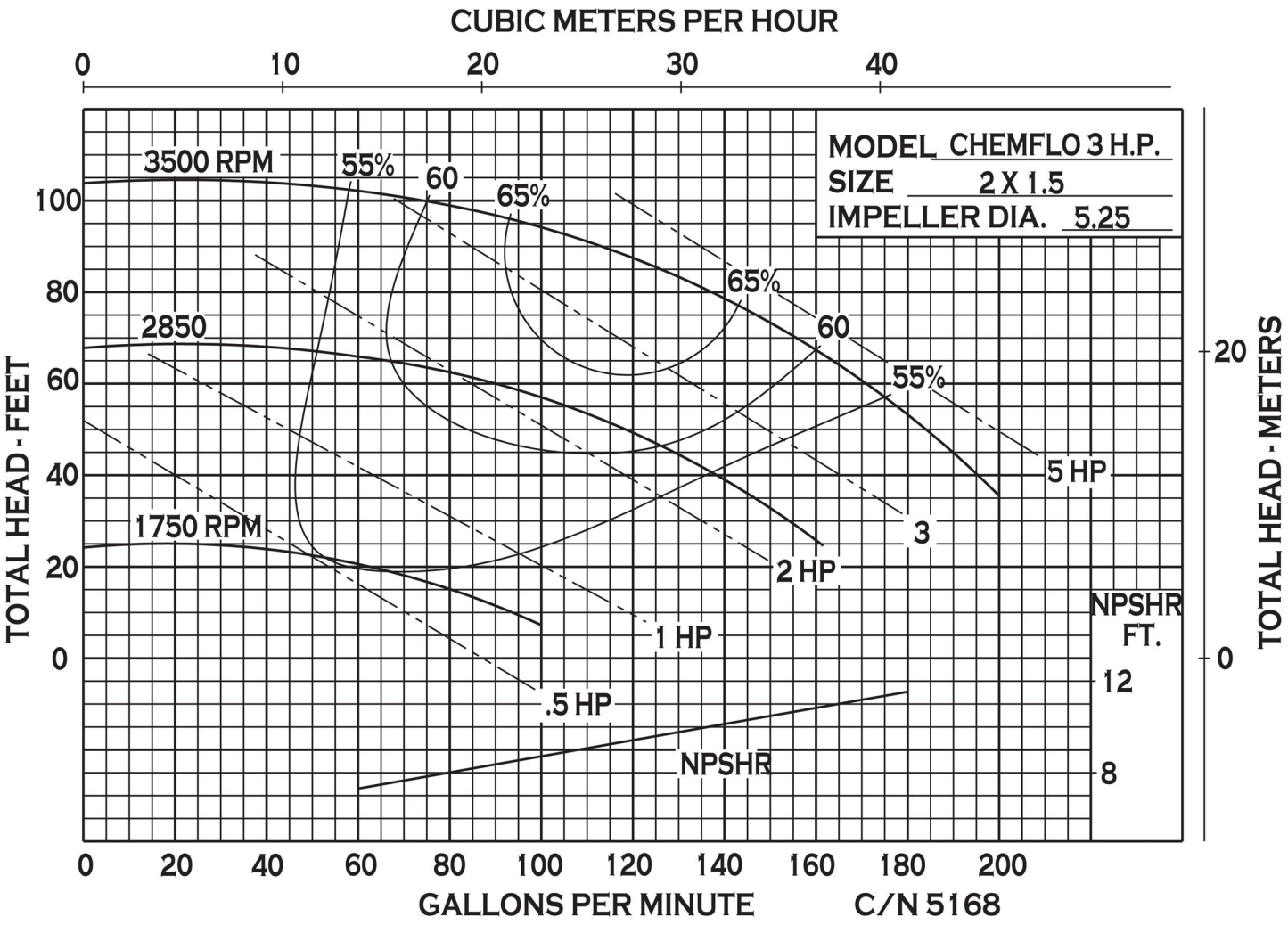

34800 BENNETT - FRASER, MI 48026-1686
(586) 293-8240 - FAX (586) 293-8469
(800) 563-8006 - www.mppumps.com

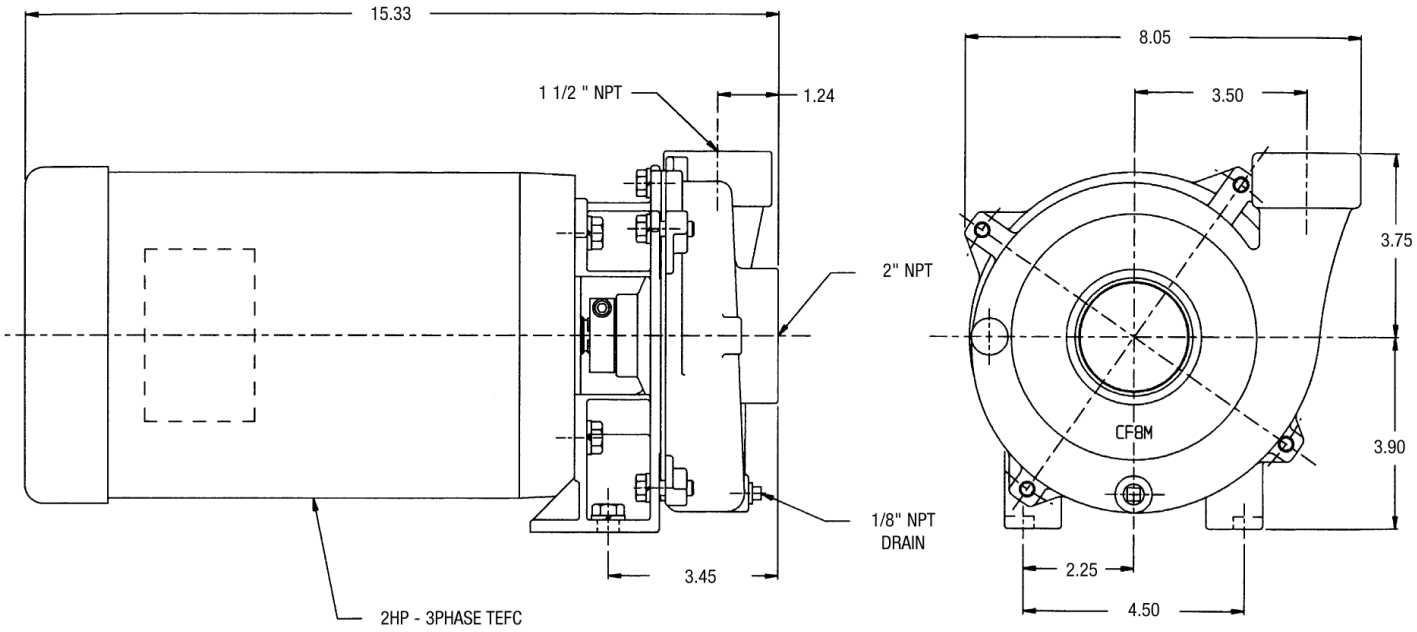

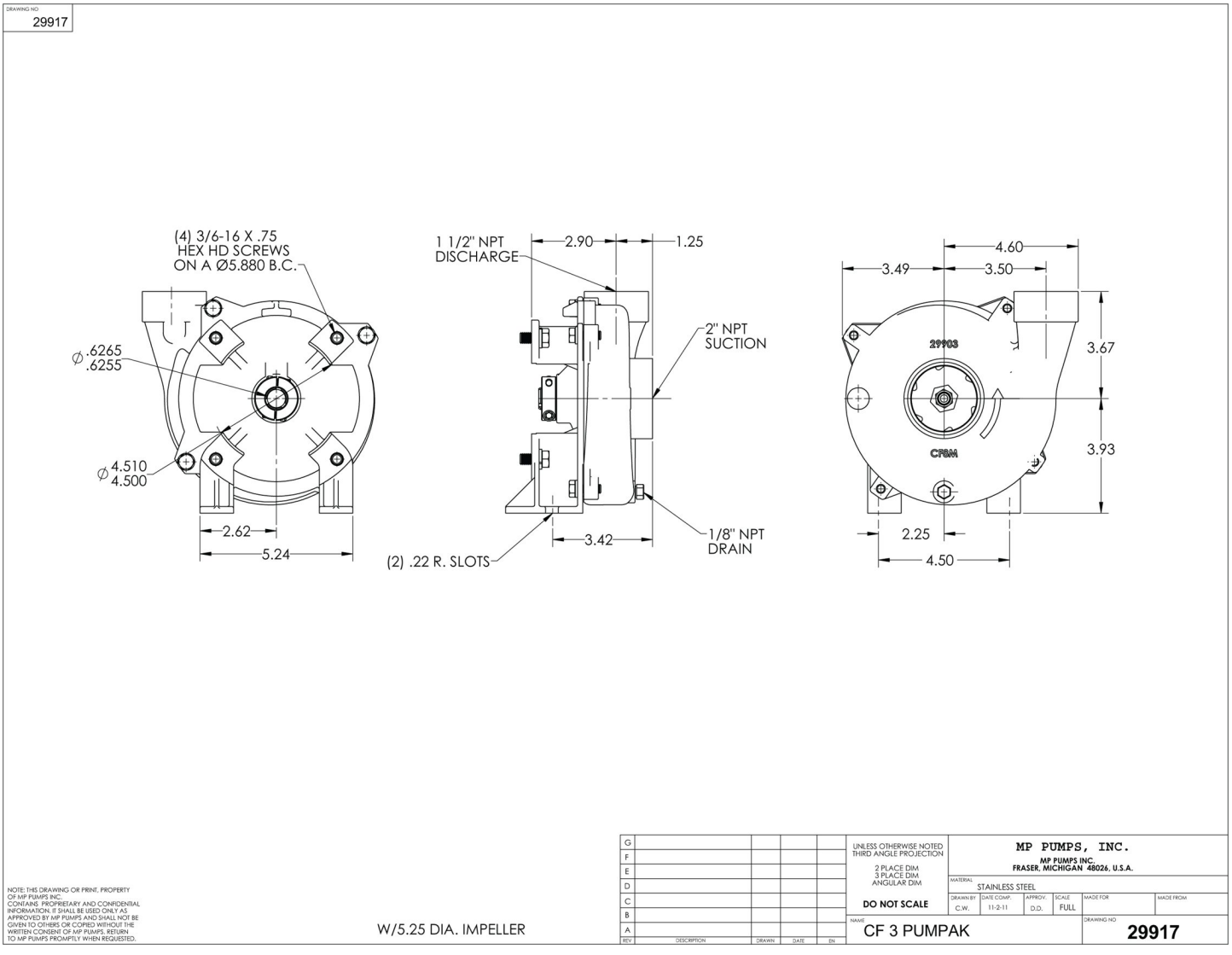

34800 BENNETT - FRASER, MI 48026-1686
(586) 293-8240 - FAX (586) 293-8469
(800) 563-8006 - www.mppumps.com

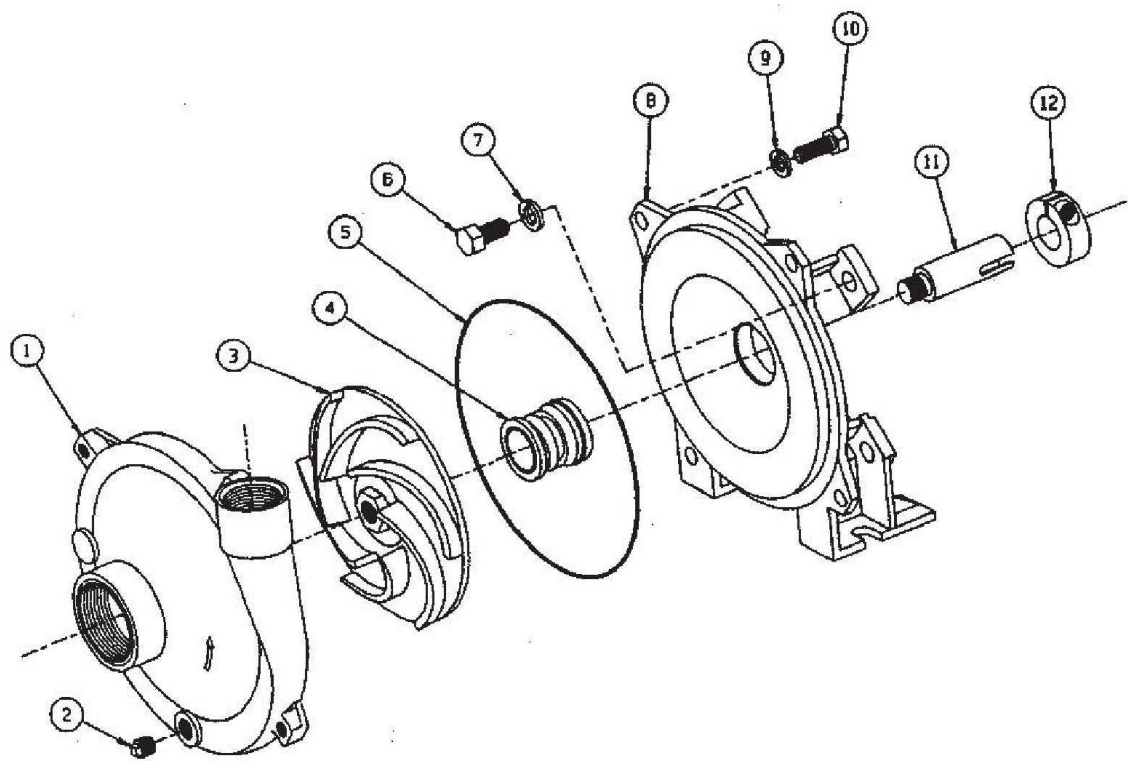

ITEM NO.	PART NO.	DESCRIPTION	QTY.
1	29904	Housing S.S 2" x 1 1/2" CHEMFLO 3-4	1
1	29906	Housing S.S 1 1/2" x 1" CHEMFLO 1-2	1
2	21255	1/8" NPT Pipe plug S.S	1
3	29910	Impeller S.S 6.00 A CHEMFLO 1	1
3	29912	Impeller S.S 5.25 B CHEMFLO 2, 3	1
3	29914	Impeller S.S 4.50 C CHEMFLO 4	1
4	30054	3/4" T-9 Seal carbon/ceramic/teflon	1
4	30061	3/4" T-21 Seal carbon/ceramic/viton	1
5	30066	O-Ring teflon	1

ITEM NO.	PART NO.	DESCRIPTION	QTY.
5	29715	O-Ring viton	1
6	21701	3/8" - 16 x 3/4" H.H.C.S. CPS	4
7	21266	3/8" Lockwasher S.S	4
8	29908	Adaptor S.S 56C	1
9	21238	5/16" Lockwashers S.S	4
10	21242	5/16" - 18 x 7/8" H.H.C.S. S.S	4
11	29785	Sleeve S.S 5/8" I.D.	1
12	28049	Clamp STL.	1

MP PUMPS, INC.
34800 BENNETT • FRASER, MI 48026-1686
(586) 293-8240 • FAX (586) 293-8469
(800) 563-8006 • www.mppumps.com

FORM 3060-A
PRINTED IN U.S.A. (6-97)

30482

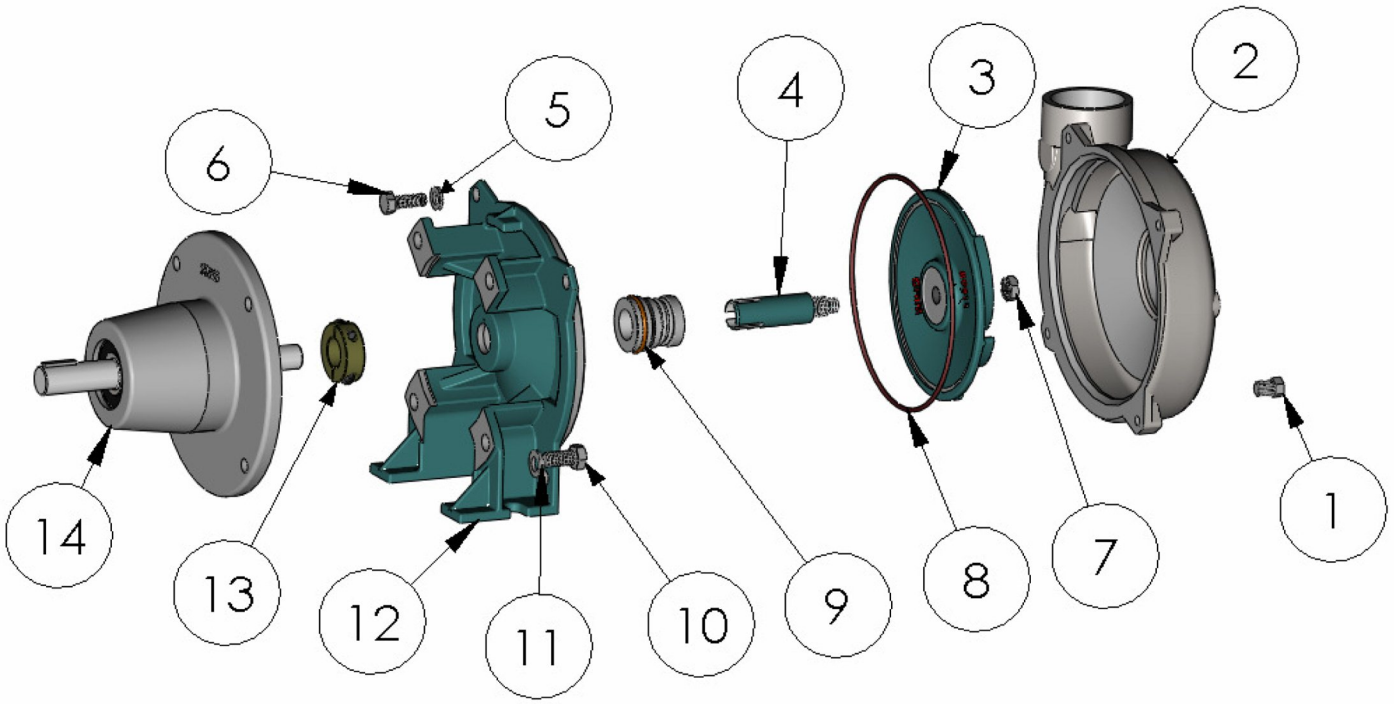

	ITEM NO.	PART NO.	DESCRIPTION	QTY.
	1	21255	PIPE PLUG S.S. - 1/8 NPT	1
	2	29904	HOUSING S.S.	1
	3	29912	IMPELLER S.S. - 5.25 DIA.	1
	4	29785	DRIVE SLEEVE S.S.	1
	5	21238	LOCKWASHER S.S. - 5/16	4
	6	21242	HEX HD. CAPSCREW S.S. - 5/16-18 X .88	4
	7	35598	HEX JAM NUT S.S.	1
*	8	29715	O RING - VITON	1
*	9	30061	SEAL ASSY. - 3/4" T-2100	1
	10	25663	HEX. HD. CAPSCREW S.S. - 3/8-16 X 3.4	4
	11	21266	LOCKWASHER S.S. - 3/8	4
	12	29908	ADAPTER S.S.	1
	13	28049	CLAMP STL. - 3/4"	1
	14	29670	PEDESTAL ASSY. C.I.	1

*- RECOMMENDED REPLACEMENT PARTS

29917

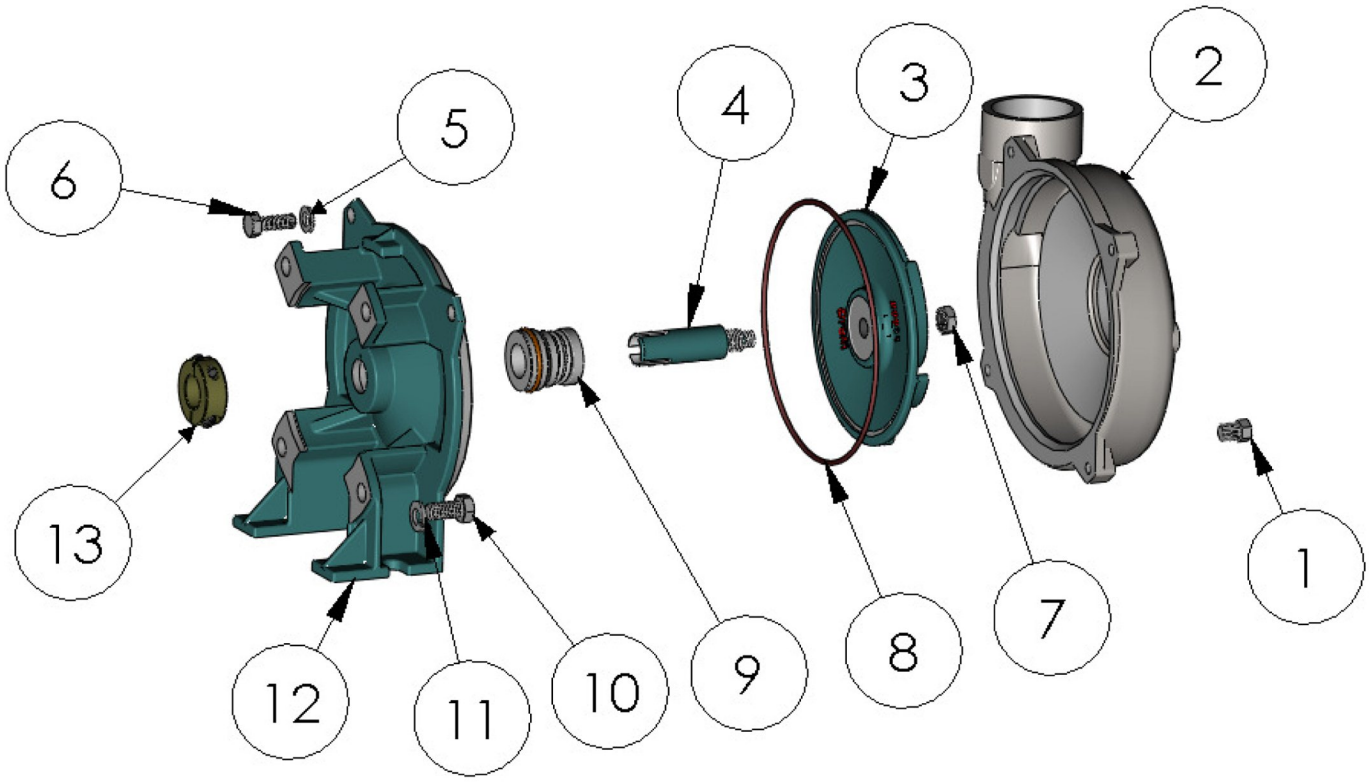

	ITEM NO.	PART NO.	DESCRIPTION	QTY.
	1	21255	PIPE PLUG S.S. - 1/8 NPT	1
	2	29904	HOUSING S.S.	1
	3	29912	IMPELLER S.S. - 5.25 DIA.	1
	4	29785	DRIVE SLEEVE S.S.	1
	5	21238	LOCKWASHER S.S. - 5/16	4
	6	21242	HEX HD. CAPSCREW S.S. - 5/16-18 X .88	4
	7	35598	HEX JAM NUT S.S.	1
*	8	29715	O RING - VITON	1
*	9	30061	SEAL ASSY. - 3/4" T-2100 VITON	1
	10	25663	HEX. HD. CAPSCREW S.S. - 3/8-16 X 3.4	4
	11	21266	LOCKWASHER S.S. - 3/8	4
	12	29908	ADAPTER S.S.	1
	13	28049	CLAMP STL. - 3/4"	2

*- RECOMMENDED REPLACEMENT PARTS

34800 BENNETT - FRASER, MI 48026-1686
(586) 293-8240 - FAX (586) 293-8469
(800) 563-8006 - www.mppumps.com

36382

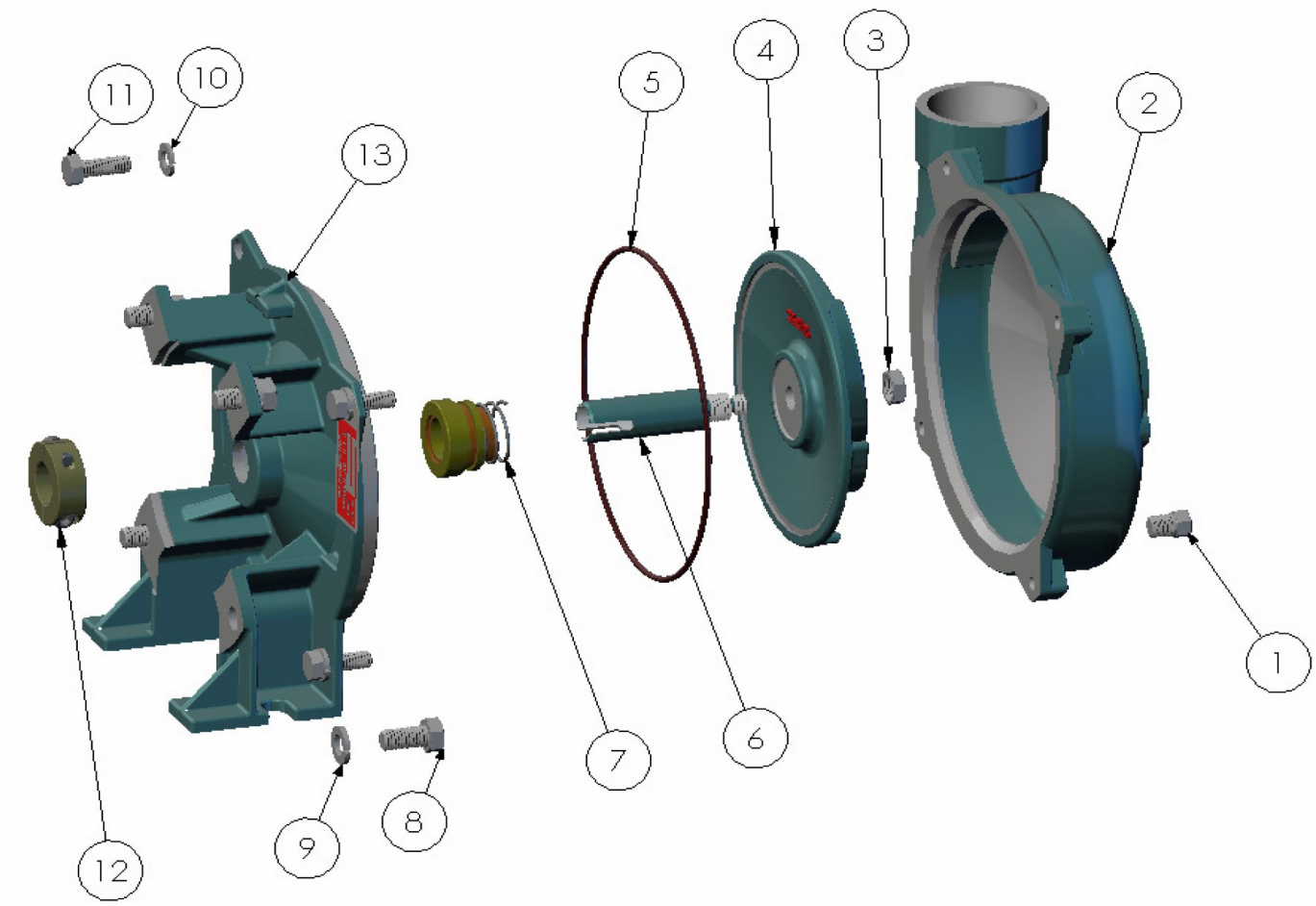

	ITEM NO.	PART NO.	DESCRIPTION	QTY.
	1	36355	PIPE PLUG BRONZE - 1/8 NPT	1
	2	36343	HOUSING BRONZE	1
	3	36354	HEX JAM NUT BRONZE - 3/8-24	1
	4	36349	IMPELLER BRONZE - 5.25 DIA.	1
*	5	29715	O RING - VITON	1
	6	36353	DRIVE SLEEVE BRONZE	1
*	7	30061	SEAL ASSY. - 3/4" T-2100	1
	8	25663	HEX HD. CAPSCREW S.S. - 3/8-16 X .75	4
	9	21266	LOCKWASHER S.S. - 3/8	4
	10	21238	LOCKWASHER S.S. - 5/16	4
	11	21242	HEX HD. CAPSCREW S.S. - 5/16-18 X .88	4
	12	36384	CLAMP S.S. - 3/4" SL.	1
	13	36345	ADAPTER BRONZE	1

*- RECOMMENDED REPLACEMENT PARTS

34800 BENNETT - FRASER, MI 48026-1686
(586) 293-8240 - FAX (586) 293-8469
(800) 563-8006 - www.mppumps.com