CALL TOLL FREE 877-742-2878 FOR SALES AND SUPPORT
Return to BurtProcess.com

CHEMFLO 4 CC

2" x 1-1/2" End Suction Centrifugal Pump

Made with high quality investment cast 316 stainless steel components, the ChemFlo® series of pumps are designed to be applied in a wide range of pumping applications where stainless steel is required.

ChemFlo® 4 pumps utilize a semi-open impeller design to allow for passage of larger solid sizes. Several seal options are available in addition to the standard type 2100 carbon / ceramic / Viton mechanical seal.

ChemFlo® 4 pumps are offered in two configurations, pump (with motor) and PumPAK® (without motor) versions. Motors available are 56C and 145TC. If ordering a PumPAK for a 145TC motor please note that the electric motor must have a base.

Other drive options are available. Further expanding the versatility of the ChemFlo® series is the CFB 4 pump, a ChemFlo® 4 in NiBrAl material. All wetted parts are produced in CA 958 nickel aluminum bronze including the drive sleeve to maximize corrosion protection in seawater applications.

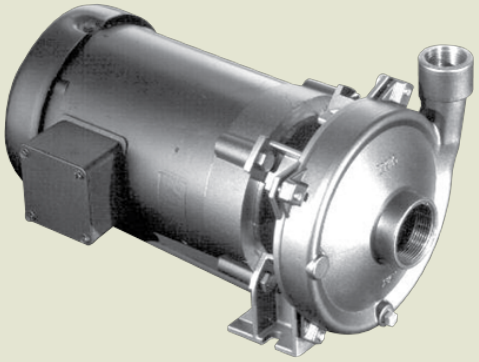

Application

- Agricultural
- Commercial
- Industrial
- Marine
- OEM

Drive Sleeve

- 316 stainless steel

SPECIFICATIONS:

Suction And Discharge	2" x 1-1/2" NPT
Materials Of Construction	316 stainless steel, CFB (nickel aluminum bronze)
Flow	Up to 180 GPM
Head Feet	Up to 80'
Impeller	4.50" semi-open and enclosed optional cast 316 stainless steel
Motor	Up to 3 HP
Drive Options	Close coupled 56C, Close coupled 145TC, Pedestal, PumPAK® (without motor)
Seal	Special seal material combinations available (consult factory), Standard carbon / ceramic / Viton
Options	Tap for recirculation or seal flush, Hydraulic motor driven pedestals and shaft driven pedestals

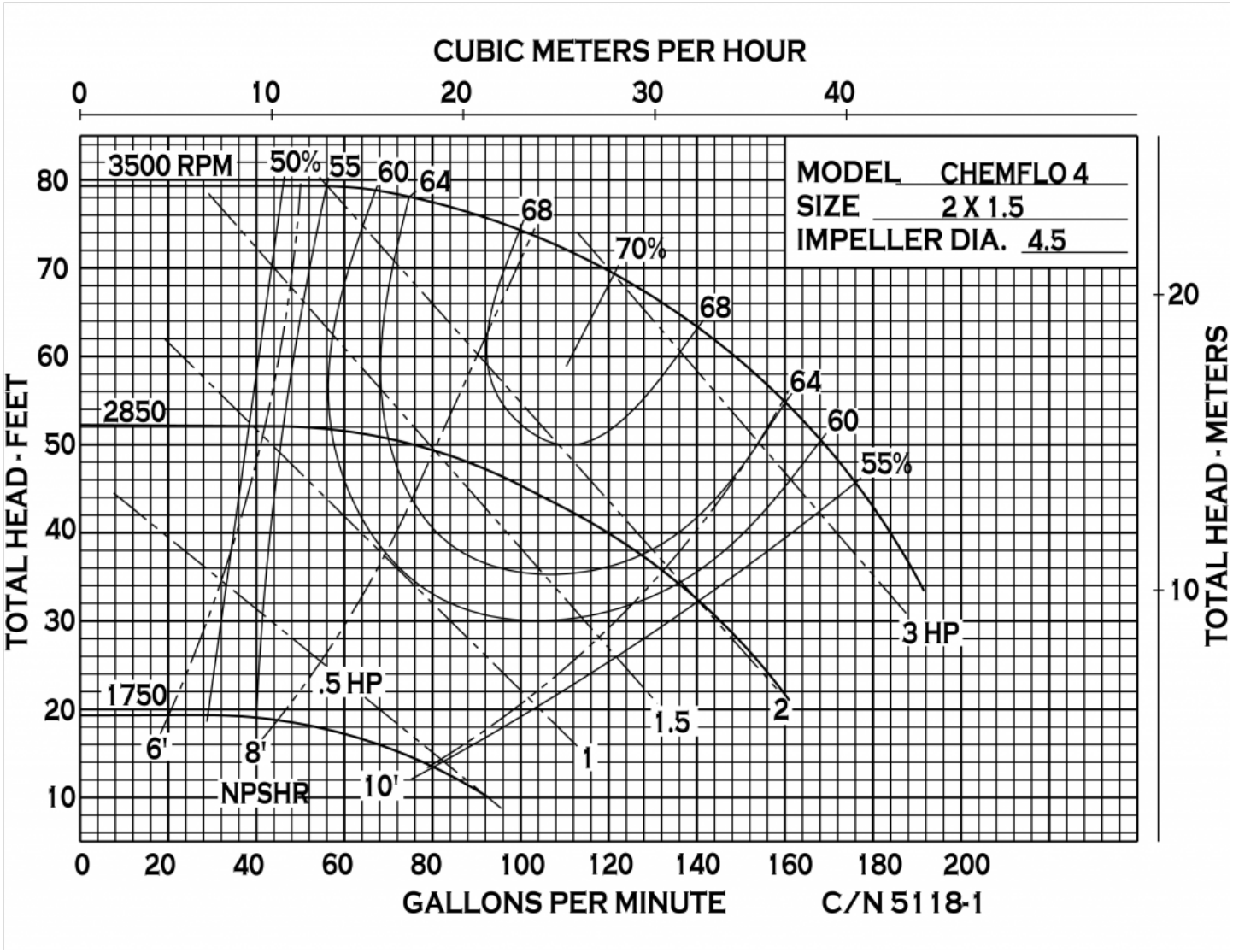

34800 BENNETT - FRASER, MI 48026-1686
(586) 293-8240 - FAX (586) 293-8469
(800) 563-8006 - www.mppumps.com

CHEMFLO 4 CC

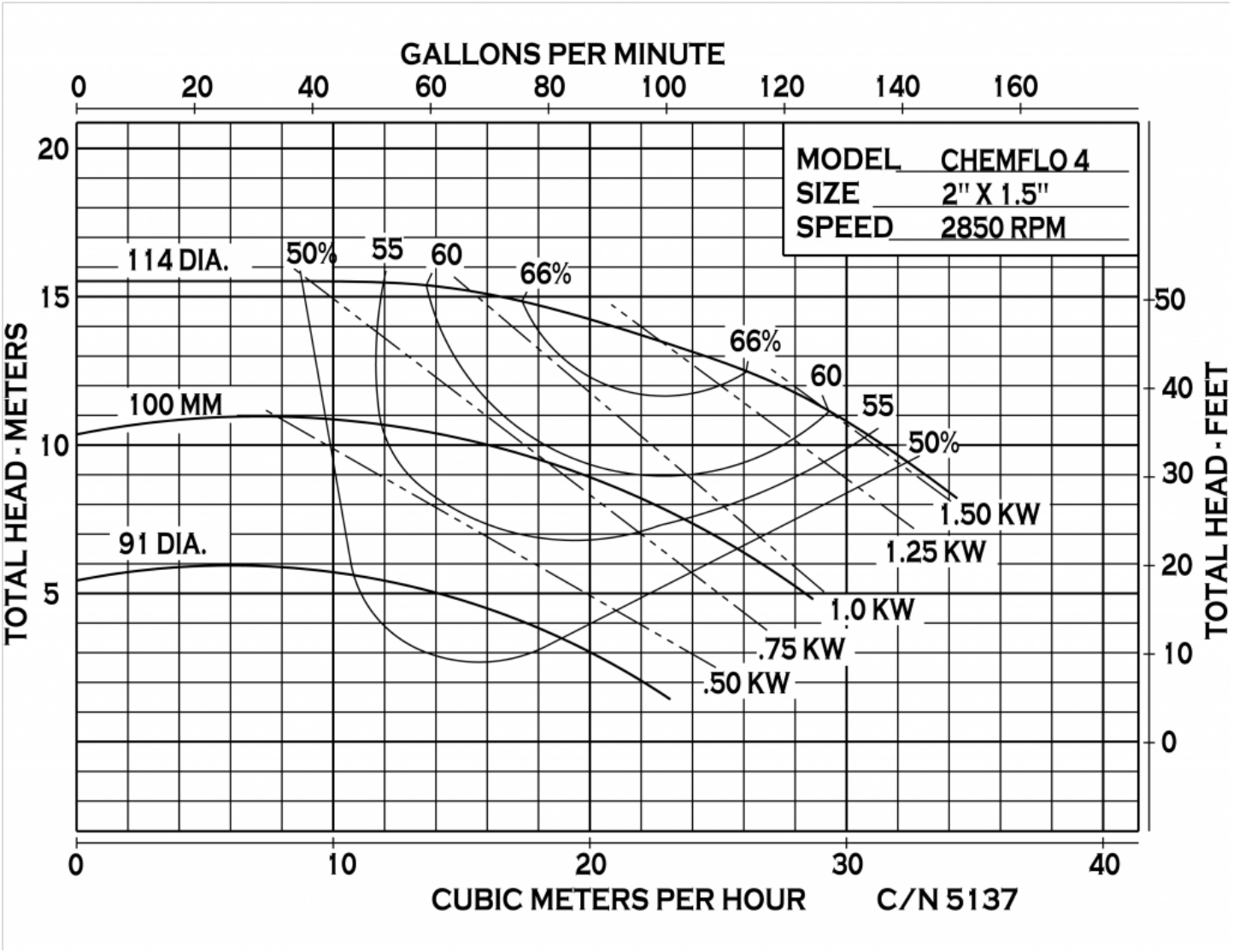

34800 BENNETT - FRASER, MI 48026-1686
(586) 293-8240 - FAX (586) 293-8469
(800) 563-8006 - www.mppumps.com

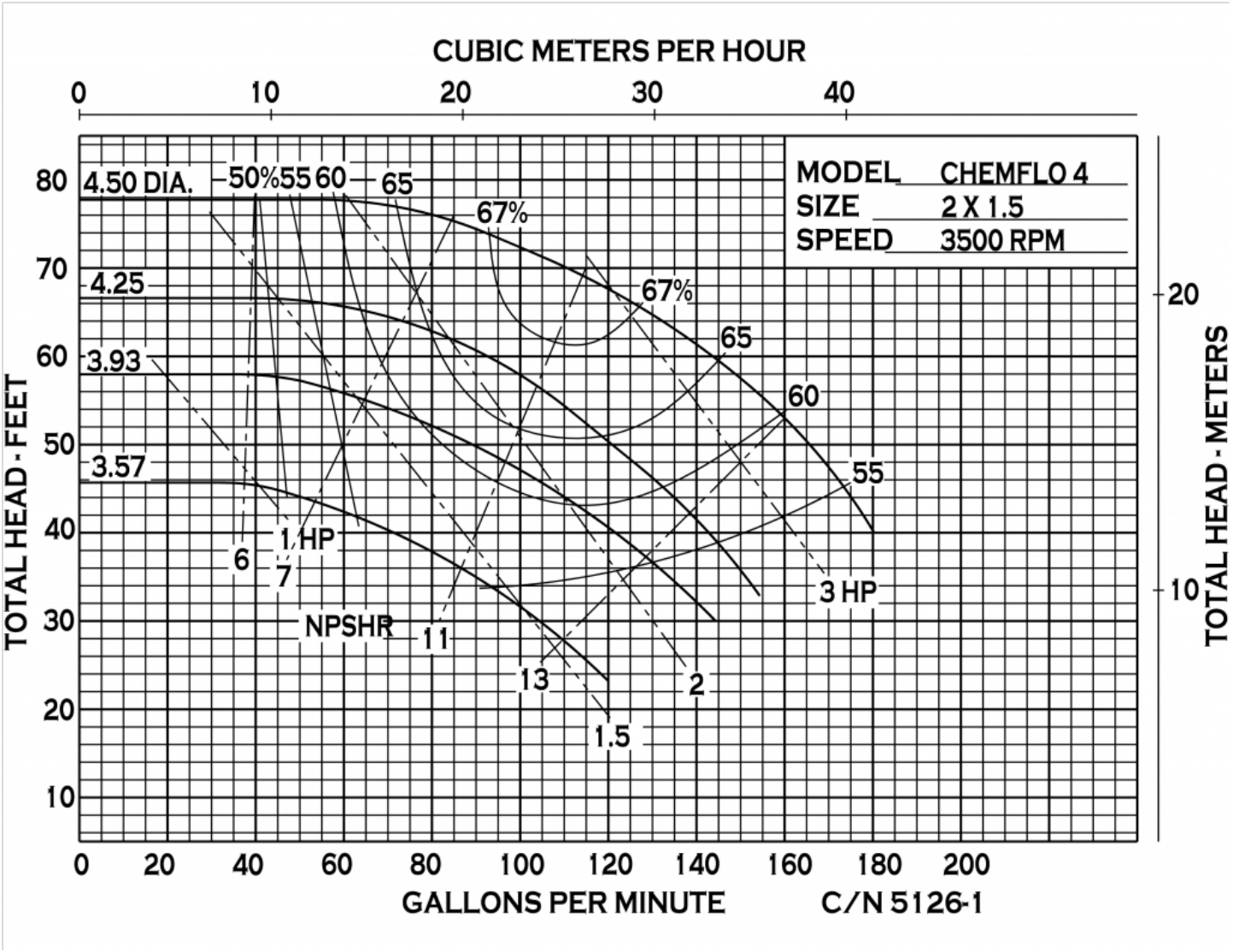

34800 BENNETT - FRASER, MI 48026-1686
(586) 293-8240 - FAX (586) 293-8469
(800) 563-8006 - www.mppumps.com

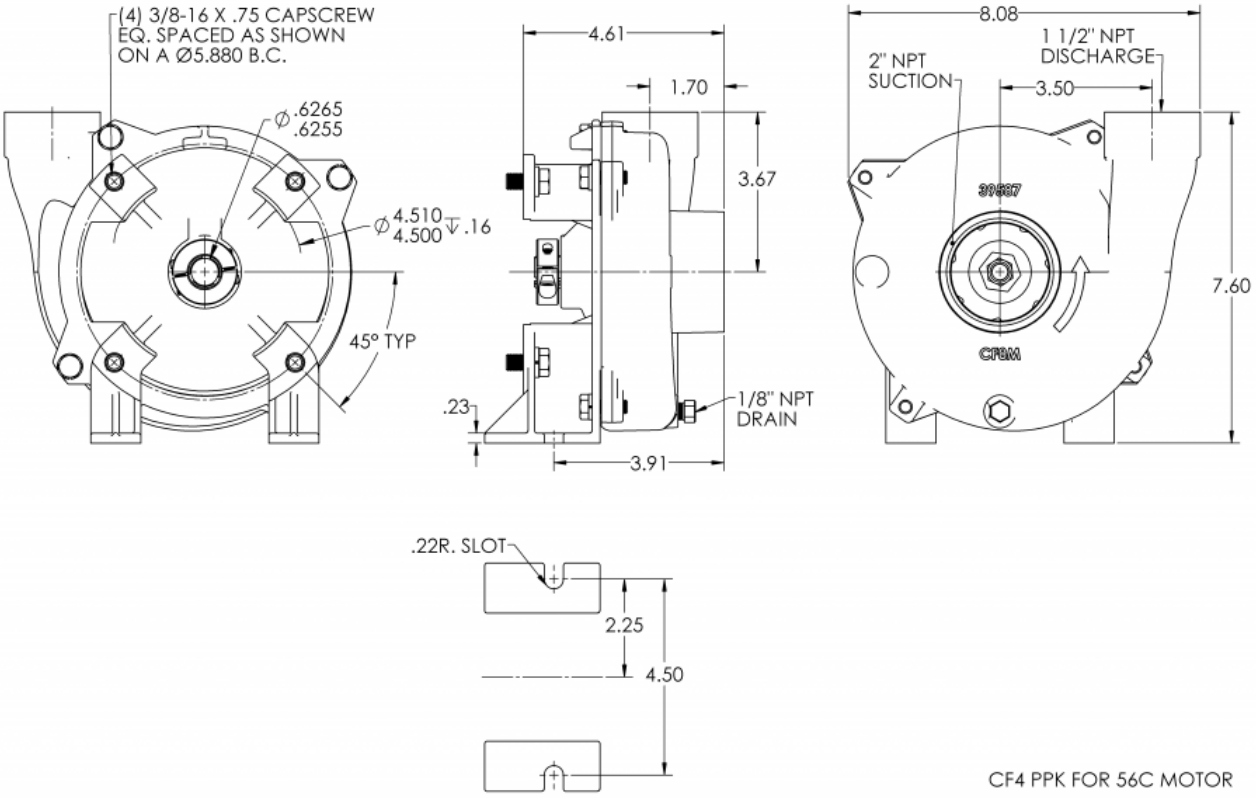

CF4 PPK FOR 56C MOTOR

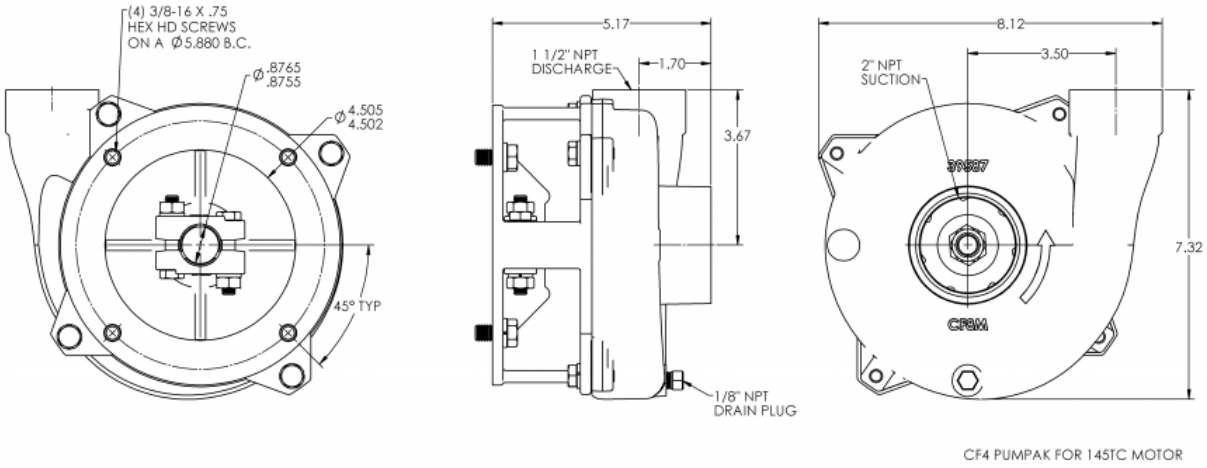
(4) 3/8-16 X .75
HEX HD SCREWS
ON A Ø5.880 B.C.
Ø .8765
.8755
Ø 4.505
4.502
45° TYP
5.17
1 1/2" NPT
DISCHARGE
1.70
3.67
1/8" NPT
DRAIN PLUG
8.12
3.50
2" NPT
SUCTION
7.32
CF4 PUMPAK FOR 145TC MOTOR

CHEMFLO 4 CC

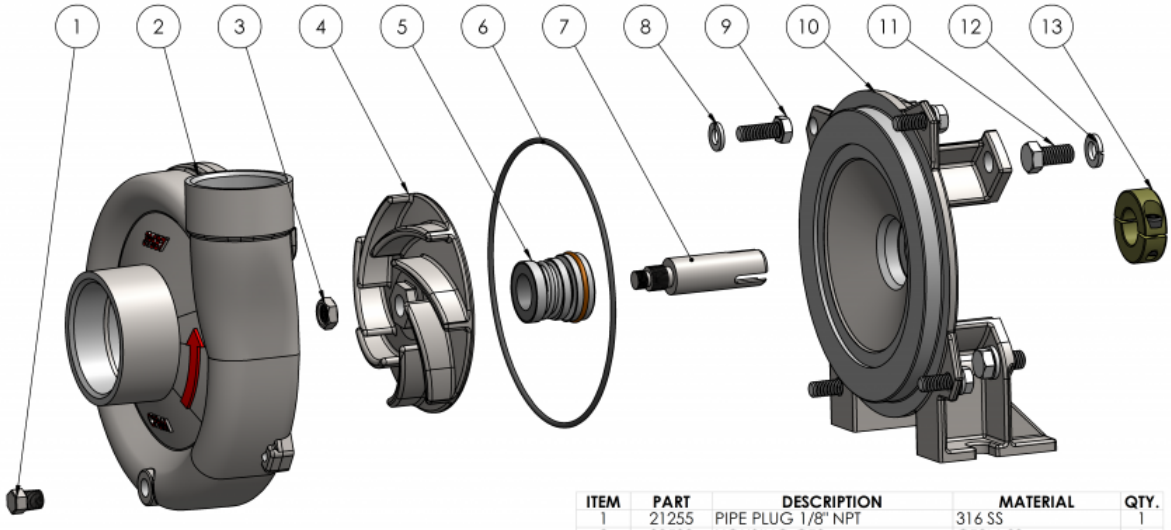

ITEM	PART	DESCRIPTION	MATERIAL	QTY.
1	21255	PIPE PLUG 1/8" NPT	316 SS	1
2	39588	HOUSING CF3	CF8M SS	1
3	35598	HEX JAM NUT SS: 3/8-24	316 SS	1
4	29914	IMPELLER Ø4.50	CF8M SS	1
4	31844	IMPELLER Ø4.25	CF8M SS	1
4	30240	IMPELLER Ø3.93	CF8M SS	1
4	30241	IMPELLER Ø3.57	CF8M SS	1
5	29168	SEAL ASSEMBLY 3/4"	CAR/SIC	1
5	34380	SEAL ASSEMBLY 3/4"	SILICONE	1
5	30061	SEAL ASSEMBLY 3/4"	CCS/VITON	1
5	30358	SEAL ASSEMBLY 3/4"	EPT	1
5	30054	SEAL ASSEMBLY 3/4"	TEFLON/CCS	1
6	30066	O-RING AS-568-163	TEFLON ENCAPS SIL.	1
6	31230	O-RING AS-568-162	EPDM	1
6	29715	O-RING AS-568-162	VITON	1
6	35290	O-RING AS-568-162	NEOPRENE	1
6	39375	O-RING AS-568-162	BUNA	1
6	50524	O-RING AS-568-162	AFLAS	1
7	29785	DRIVE SLEEVE	316 SS	1
8	21238	LOCKWASHER 5/16 X 1/8	304 SS	4
9	21242	CAP SCREW HH 5/16-18 X 7/8	304 SS	4
10	29908	ADAPTER	CF8M SS	1
11	25663	CAPSCREW 3/8-16 X 3/4	304 SS	4
12	21266	LOCKWASHER 3/8 X 1/8	304 SS	4
13	28049	CLAMP	ZINC PLATED STEEL	1

CF4 PPK FOR 56C MOTOR

CHEMFLO 4 CC

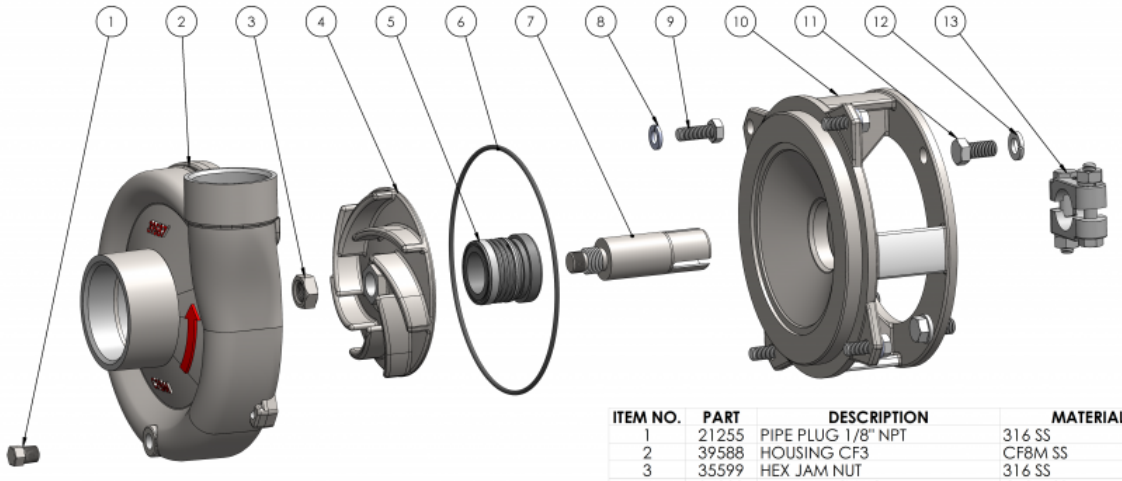

CF4 PUMPAK FOR 145TC MOTOR

ITEM NO.	PART	DESCRIPTION	MATERIAL	QTY.
1	21255	PIPE PLUG 1/8" NPT	316 SS	1
2	39588	HOUSING CF3	CF8M SS	1
3	35599	HEX JAM NUT	316 SS	1
4	34209	IMPELLER Ø4.50	CF8M SS	1
4	38600	IMPELLER Ø4.25	CF8M SS	1
4	34407	IMPELLER Ø3.93	CF8M SS	1
4	39912	IMPELLER Ø3.57	CF8M SS	1
5	26440	SEAL ASSEMBLY 1"	CAR/CER/CHEMLON	1
5	22560	SEAL ASSEMBLY 1"	SVC SSC	1
5	22273	SEAL ASSEMBLY 1"	CCS/VITON	1
6	30066	O-RING AS-568-163	TEFLON ENCAPS SIL.	1
6	31230	O-RING AS-568-162	EPDM	1
6	29715	O-RING AS-568-162	VITON	1
6	35290	O-RING AS-568-162	NEOPRENE	1
6	39375	O-RING AS-568-162	BUNA	1
6	50524	O-RING AS-568-162	AFLAS	1
7	35753	DRIVE SLEEVE 145TC	316 SS	1
8	21238	LOCKWASHER 5/16 X 18	304 SS	4
9	21242	CAP SCREW HH 5/16-18 X 7/8	304 SS	4
10	33794	ADAPTER 145TC	316 SS	1
11	25663	CAPSCREW 3/8-16 X 3/4	304 SS	4
12	21266	LOCKWASHER 3/8 X 1/8	304 SS	4
13	23003	CLAMP ASSEMBLY	316 SS	1