CALL TOLL FREE 877-742-2878 FOR SALES AND SUPPORT
Return to BurtProcess.com

CHEMFLO® 6 CC

3" x 2" End Suction Centrifugal Pump

Made with high quality investment cast 316 stainless steel components, the ChemFlo® series of pumps are designed to be applied in a wide range of pumping applications where stainless steel is required.

The ChemFlo® 6 pumps utilize an enclosed impeller designed for achieving higher heads and efficiencies than a standard semi-open impeller. Multiple impeller trims allow the ChemFlo® 6 to meet most duty points up to 450 GPM and total head up to 157 feet. Several mechanical seal options are available in addition to the standard type 2100 carbon / ceramic / Viton mechanical seal.

ChemFlo® 6 pumps are offered in two configurations, pump (with motor) and PumPAK® (without motor) versions. Motors available are 145TC, 184TC, and 215TC. If ordering a PumPAK please note that the electric motor must have a base.

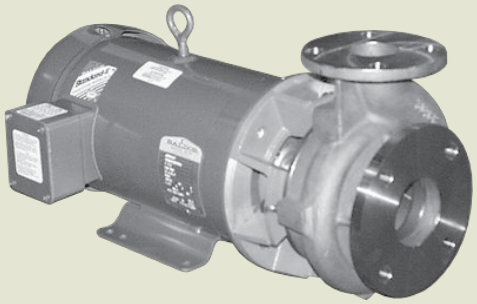

Application

- Agricultural
- Commercial
- Industrial
- Marine
- OEM

Drive Sleeve

- 316 stainless steel

SPECIFICATIONS:

Suction And Discharge	3" x 2" 150# ANSI flange
Materials Of Construction	316 stainless steel
Flow	Up to 450 GPM
Head Feet	Up to 157'
Impeller	6.18" enclosed, cast 316 SS
Motor	Up to 15 HP
Drive Options	Close coupled 184TC, Close coupled 215TC, Close coupled 145TC, Pedestal, PumPAK® (without motor)
Seal	Special seal material combinations available (consult factory), Standard carbon / ceramic / Viton
Options	Tap for recirculation or seal flush, Hydraulic motor driven pedestals and shaft driven pedestals

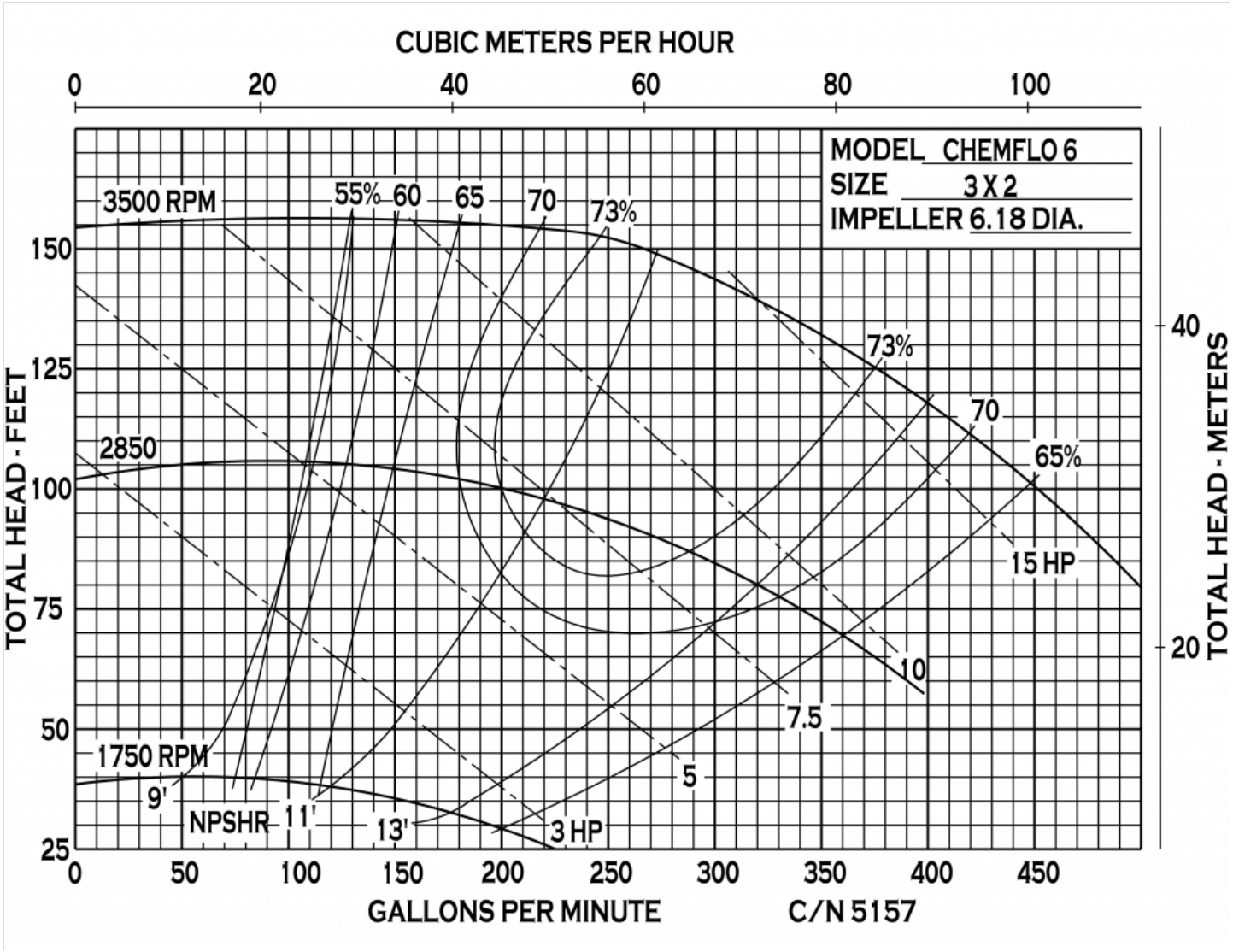

34800 BENNETT - FRASER, MI 48026-1686
(586) 293-8240 - FAX (586) 293-8469
(800) 563-8006 - www.mppumps.com

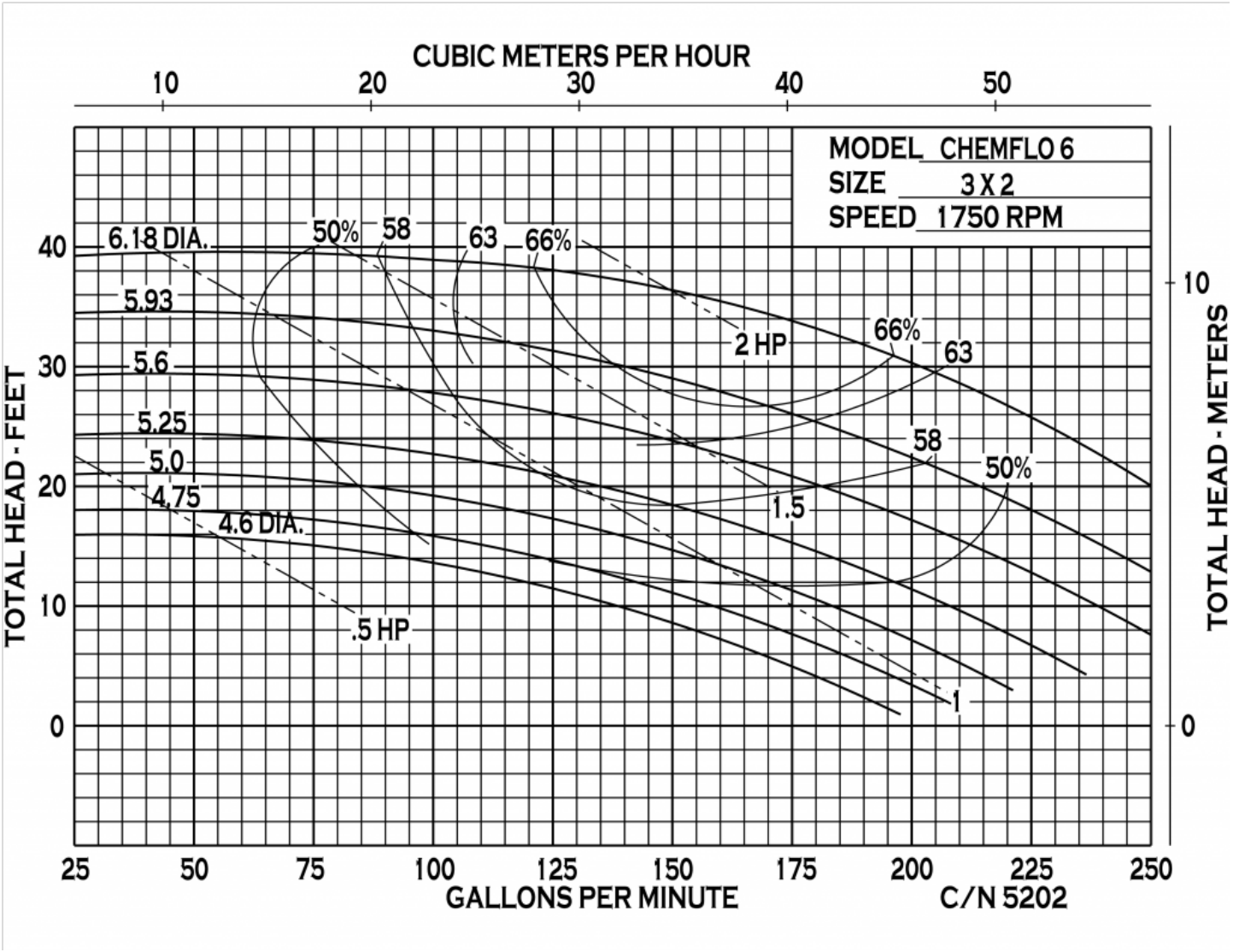

34800 BENNETT - FRASER, MI 48026-1686
(586) 293-8240 - FAX (586) 293-8469
(800) 563-8006 - www.mppumps.com

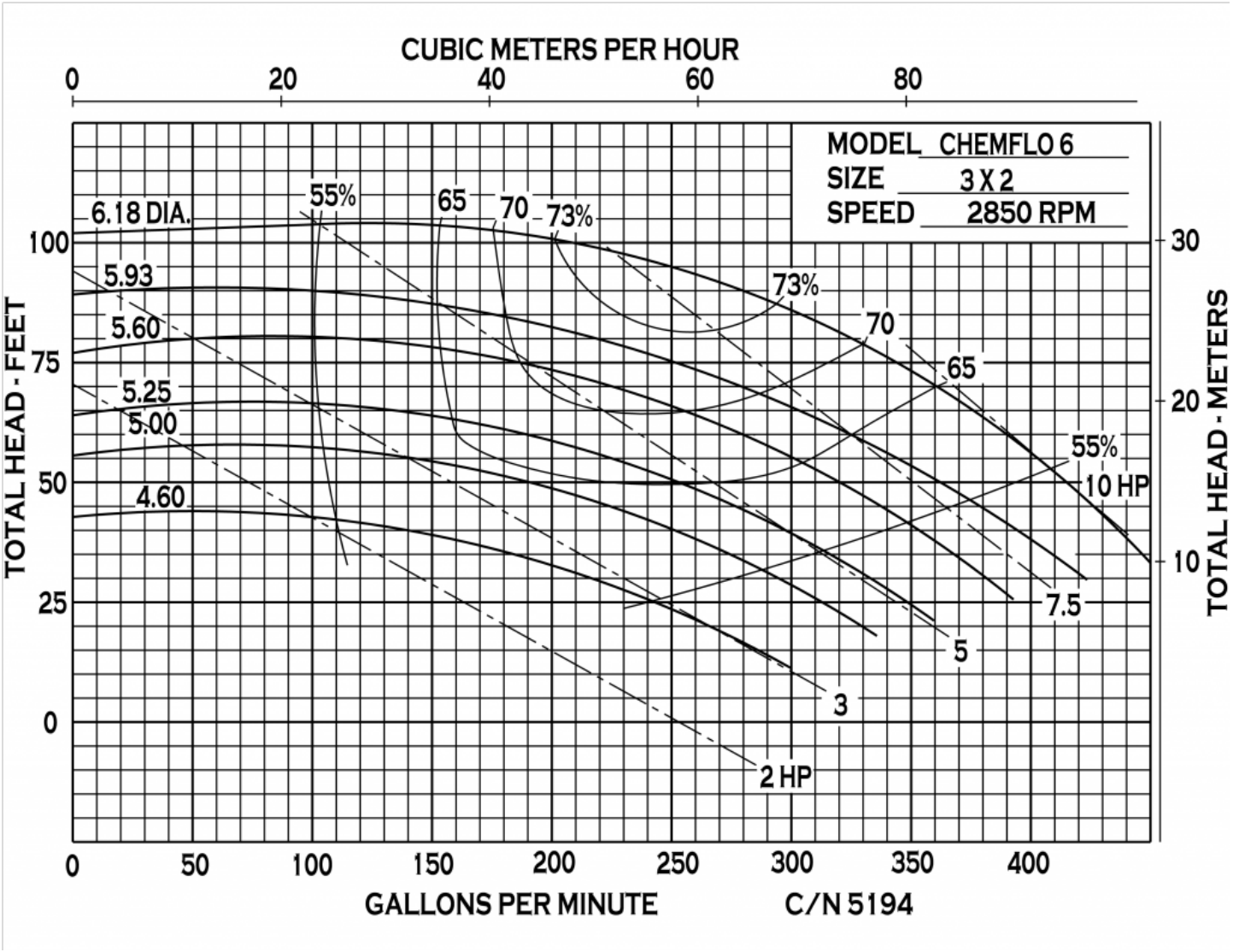

34800 BENNETT - FRASER, MI 48026-1686
(586) 293-8240 - FAX (586) 293-8469
(800) 563-8006 - www.mppumps.com

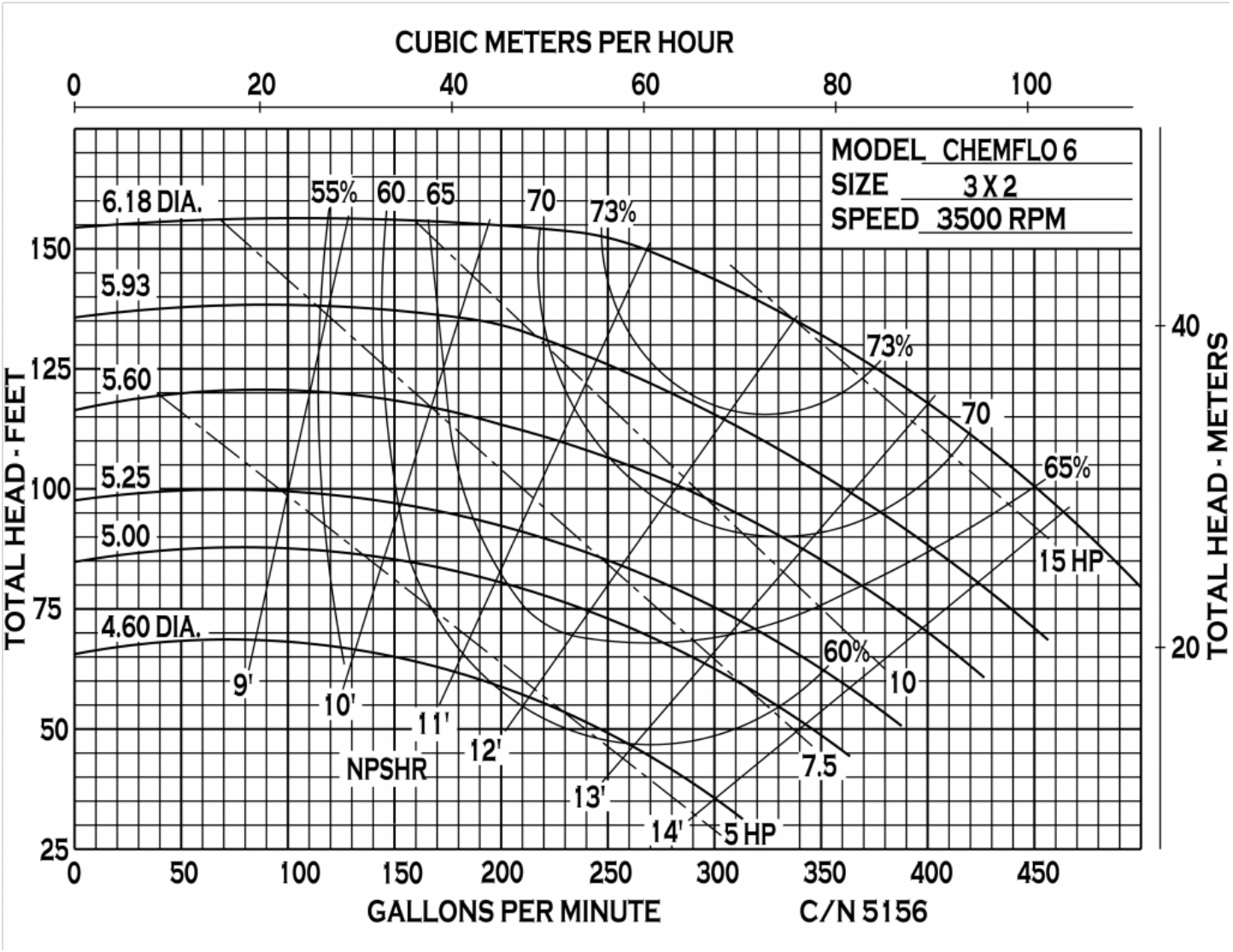

34800 BENNETT - FRASER, MI 48026-1686
(586) 293-8240 - FAX (586) 293-8469
(800) 563-8006 - www.mppumps.com

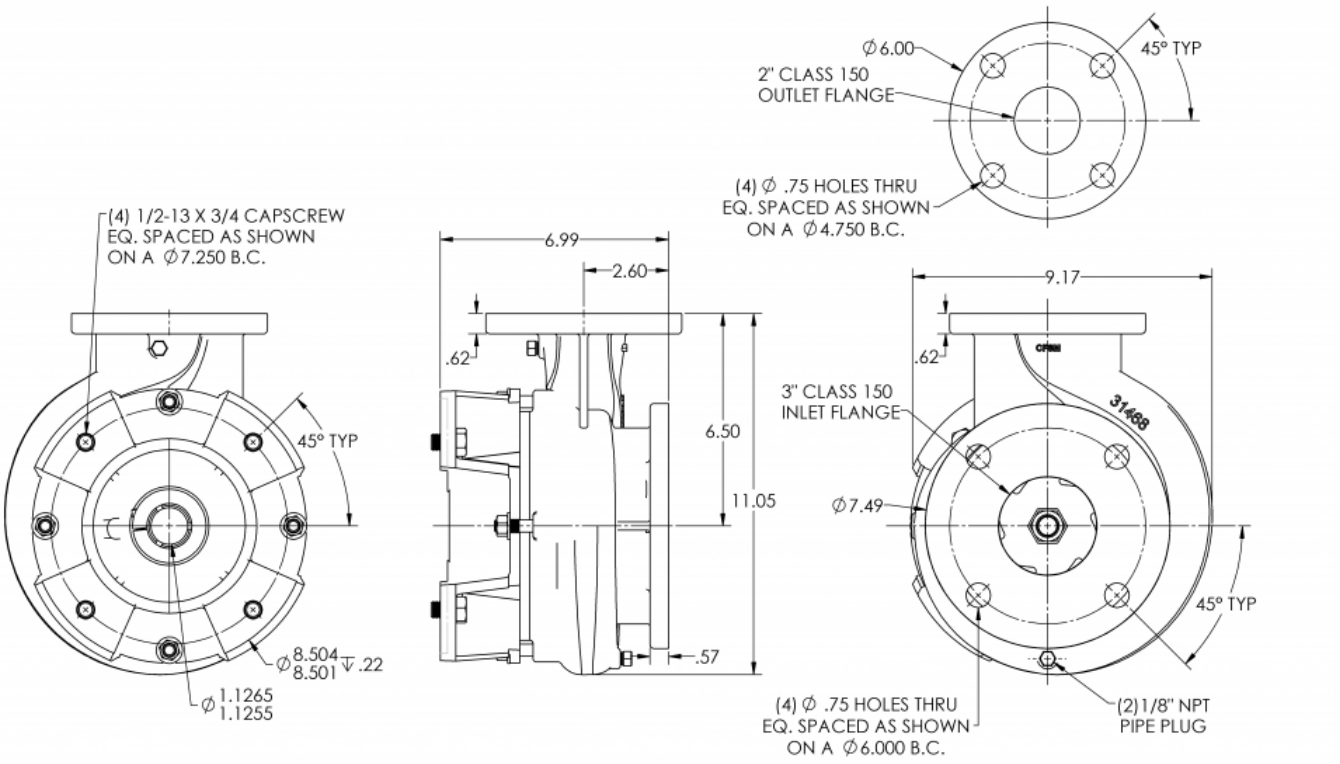

CF6 PUMPAK FOR 184TC

34800 BENNETT - FRASER, MI 48026-1686
(586) 293-8240 - FAX (586) 293-8469
(800) 563-8006 - www.mppumps.com

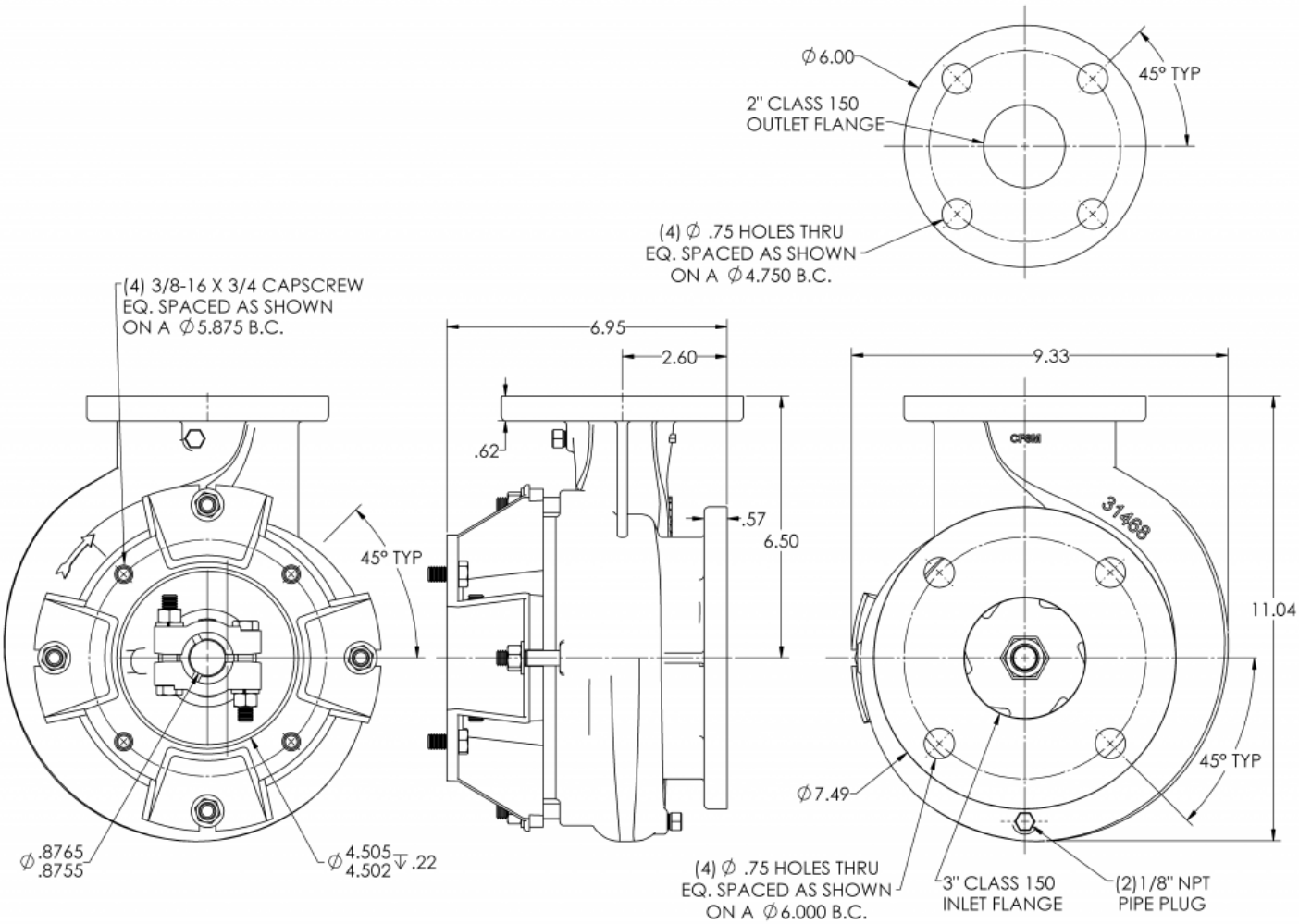

CF6 PUMPAK FOR 145TC

34800 BENNETT - FRASER, MI 48026-1686
(586) 293-8240 - FAX (586) 293-8469
(800) 563-8006 - www.mppumps.com

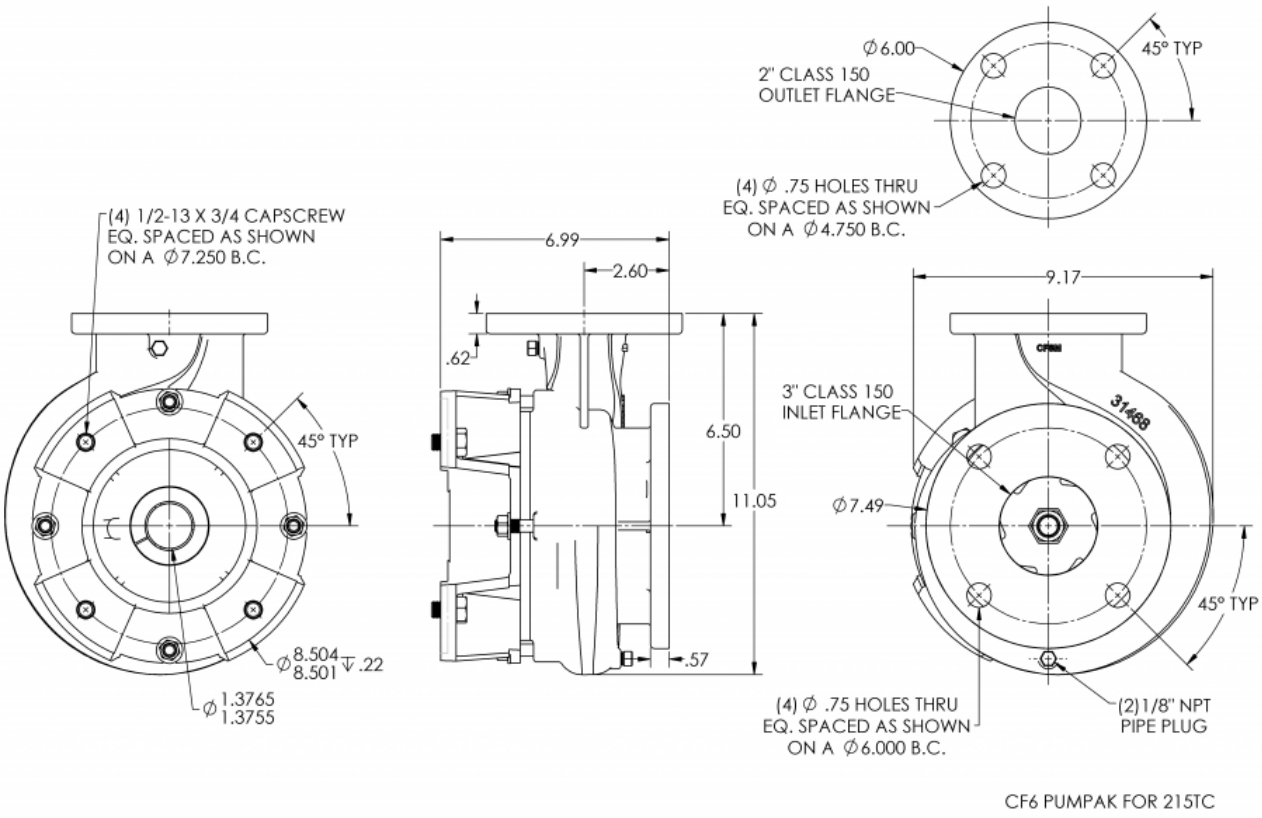

CF6 PUMPAK FOR 215TC

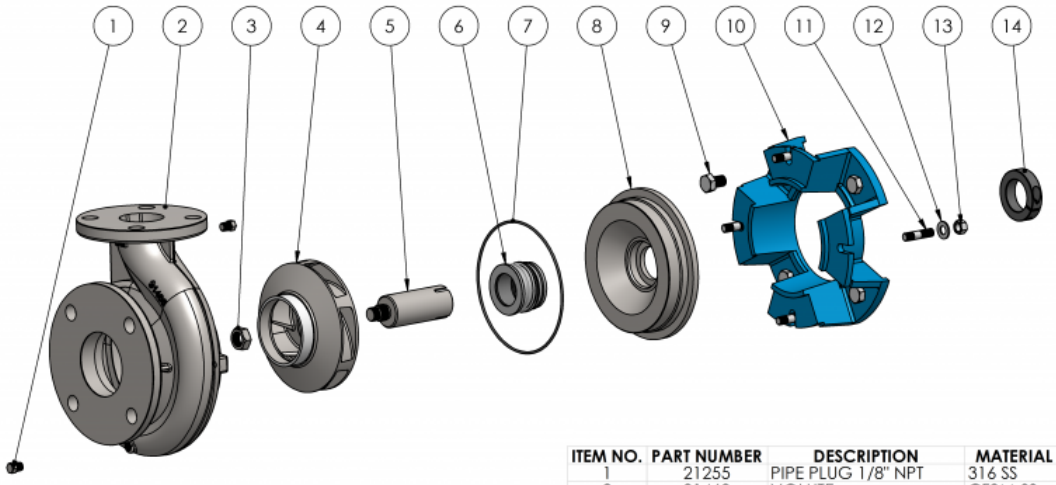

CF6 PUMPAK FOR 215TC

ITEM NO.	PART NUMBER	DESCRIPTION	MATERIAL	QTY.
1	21255	PIPE PLUG 1/8" NPT	316 SS	2
2	31469	VOLUTE	CF8M SS	1
3	29194	HEX JAM NUT 5/8-18	316 SS	1
4	31467	IMPELLER Ø6.18	CF8M SS	1
4	31750	IMPELLER Ø5.93	CF8M SS	1
4	31751	IMPELLER Ø5.60	CF8M SS	1
4	31748	IMPELLER Ø5.25	CF8M SS	1
4	31752	IMPELLER Ø5.00	CF8M SS	1
4	31753	IMPELLER Ø4.60	CF8M SS	1
5	31311	DRIVE SLEEVE	316 SS	1
6	31347	SEAL ASSEMBLY 1.5"	STC/316 SS	1
6	31374	SEAL ASSEMBLY 1.5"	CCS VITON	1
6	28170	SEAL ASSEMBLY 1.5"	EPDM	1
6	26461	SEAL ASSEMBLY 1.5"	SSC	1
6	26565	SEAL ASSEMBLY 1.5"	CHEMLON	1
7	30066	O-RING AS-568-163	SILICONE	1
7	31233	O-RING AS-568-163	VITON	1
7	33757	O-RING AS-568-163	EPDM	1
8	31093	HOUSING SEAL	CF8M SS	1
9	31235	CAPSCREW 1/2-13X3/4	304 SS	4
10	31091	MOTOR ADAPTOR	CAST IRON	1
11	21261	STUD 3/8-16X1.63	304 SS	4
12	28053	FLAT WASHER	304 SS	4
13	21268	HEXNUT 3/8-16	304 SS	4
14	31312	CLAMP	STEEL	1

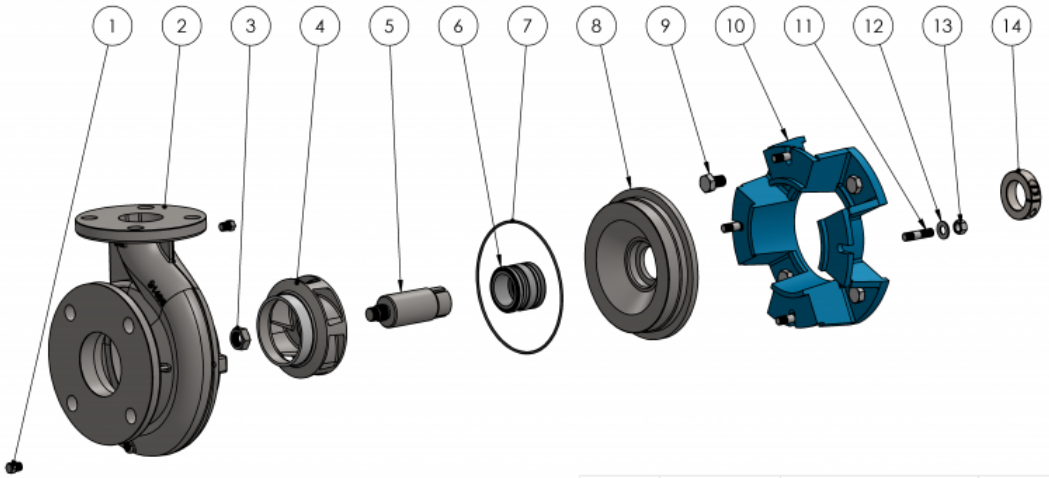

CF6 PUMPAK FOR 184TC

ITEM NO.	PART NUMBER	DESCRIPTION	MATERIAL	QTY.
1	21255	PIPE PLUG 1/8" NPT	316 SS	2
2	31469	VOLUTE	CF8M SS	1
3	29194	HEX JAM NUT 5/8-18	316 SS	1
4	31467	IMPELLER Ø6.18	CF8M SS	1
4	31750	IMPELLER Ø5.93	CF8M SS	1
4	31751	IMPELLER Ø5.60	CF8M SS	1
4	31748	IMPELLER Ø5.25	CF8M SS	1
4	31752	IMPELLER Ø5.00	CF8M SS	1
4	31753	IMPELLER Ø4.60	CF8M SS	1
5	31094	DRIVE SLEEVE	316 SS	1
6	31347	SEAL ASSEMBLY 1.5"	STC/316 SS	1
6	31374	SEAL ASSEMBLY 1.5"	CCS VITON	1
6	28170	SEAL ASSEMBLY 1.5"	EPDM	1
6	26461	SEAL ASSEMBLY 1.5"	SSC	1
6	26565	SEAL ASSEMBLY 1.5"	CHEMLON	1
7	30066	O-RING AS-568-163	SILICONE	1
7	31233	O-RING AS-568-163	VITON	1
7	33757	O-RING AS-568-163	EPDM	1
8	31093	HOUSING SEAL	CF8M SS	1
9	31235	CAPSCREW 1/2-13X3/4	304 SS	4
10	31091	MOTOR ADAPTOR	CAST IRON	1
11	21261	STUD 3/8-16X1.63	304 SS	4
12	28053	FLAT WASHER	304 SS	4
13	21268	HEXNUT 3/8-16	304 SS	4
14	31099	CLAMP	STEEL	1

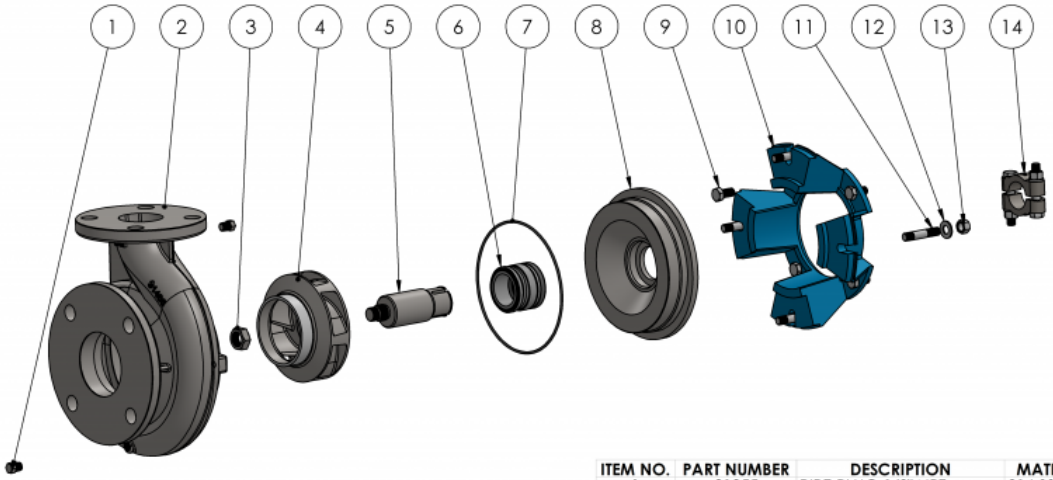

CF6 PUMPAK FOR 145TC

ITEM NO.	PART NUMBER	DESCRIPTION	MATERIAL	QTY.
1	21255	PIPE PLUG 1/8" NPT	316 SS	2
2	31469	VOLUTE	CF8M SS	1
3	29194	HEX JAM NUT 5/8-18	316 SS	1
4	31467	IMPELLER Ø6.18	CF8M SS	1
4	31750	IMPELLER Ø5.93	CF8M SS	1
4	31751	IMPELLER Ø5.60	CF8M SS	1
4	31748	IMPELLER Ø5.25	CF8M SS	1
4	31752	IMPELLER Ø5.00	CF8M SS	1
4	31753	IMPELLER Ø4.60	CF8M SS	1
5	31806	DRIVE SLEEVE	316 SS	1
6	31347	SEAL ASSEMBLY 1.5"	STC/316 SS	1
6	31374	SEAL ASSEMBLY 1.5"	CCS VITON	1
6	28170	SEAL ASSEMBLY 1.5"	EPDM	1
6	26461	SEAL ASSEMBLY 1.5"	SSC	1
6	26565	SEAL ASSEMBLY 1.5"	CHEMLON	1
7	30066	O-RING AS-568-163	SILICONE	1
7	31233	O-RING AS-568-163	VITON	1
7	33757	O-RING AS-568-163	EPDM	1
8	31093	HOUSING SEAL	CF8M SS	1
9	25663	CAPSCREW 3/8-16 X 3/4	304 SS	4
10	31711	MOTOR ADAPTER	CAST IRON	1
11	33161	STUD 3/8-16X2.00	304 SS	4
12	28053	FLAT WASHER	304 SS	4
13	21268	HEXNUT 3/8-16	304 SS	4
14	23039	CLAMP ASSEMBLY	303 SS	1