CALL TOLL FREE 877-742-2878 FOR SALES AND SUPPORT
Return to BurtProcess.com

CHEMFLO® 8 CC

3" x 1-1/2" End Suction Centrifugal Pump

Made with high quality investment cast 316 stainless steel components, the ChemFlo® series of pumps are designed to be applied in a wide range of pumping applications where stainless steel is required.

The ChemFlo® 8 pumps utilize an enclosed impeller designed for achieving higher heads and efficiencies than a standard semi-open impeller. Multiple impeller trims allow the ChemFlo® 8 to meet most duty points up to 350 GPM and total head up to 290 feet. Several mechanical seal options are available in addition to the standard type 2100 carbon / ceramic / Viton mechanical seal.

ChemFlo® 8 pumps are offered in two configurations, pump (with motor) and PumPAK® (without motor) versions. Motors available are 145TC, 184TC, 215TC, 256TC, and 286TSC. If ordering a PumPAK® please note that the electric motor must have a base.

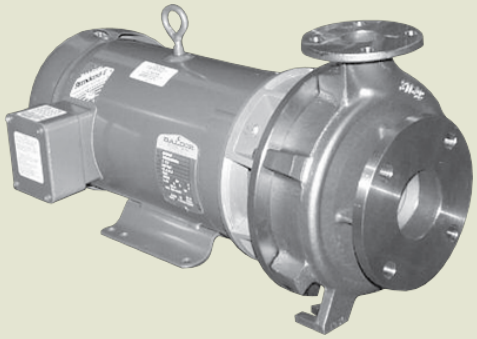

Application

- Agricultural
- Commercial
- Industrial
- Marine
- OEM

Drive Sleeve

- 316 stainless steel

SPECIFICATIONS:

Suction And Discharge	3" x 1-1/2" 150# ANSI flange
Materials Of Construction	316 stainless steel
Flow	Up to 350 GPM
Head Feet	Up to 290'
Impeller	8.0" enclosed, cast 316 stainless steel
Motor	Up to 30 HP
Drive Options	Close coupled 184TC, Close coupled 215TC, Close coupled 256TC, Close coupled 286TSC, Close coupled 145TC, Pedestal, PumPAK® (without motor)
Seal	Special seal material combinations available (consult factory), Standard carbon / ceramic / Viton
Options	Tap for recirculation or seal flush, Hydraulic motor driven pedestals and shaft driven pedestals

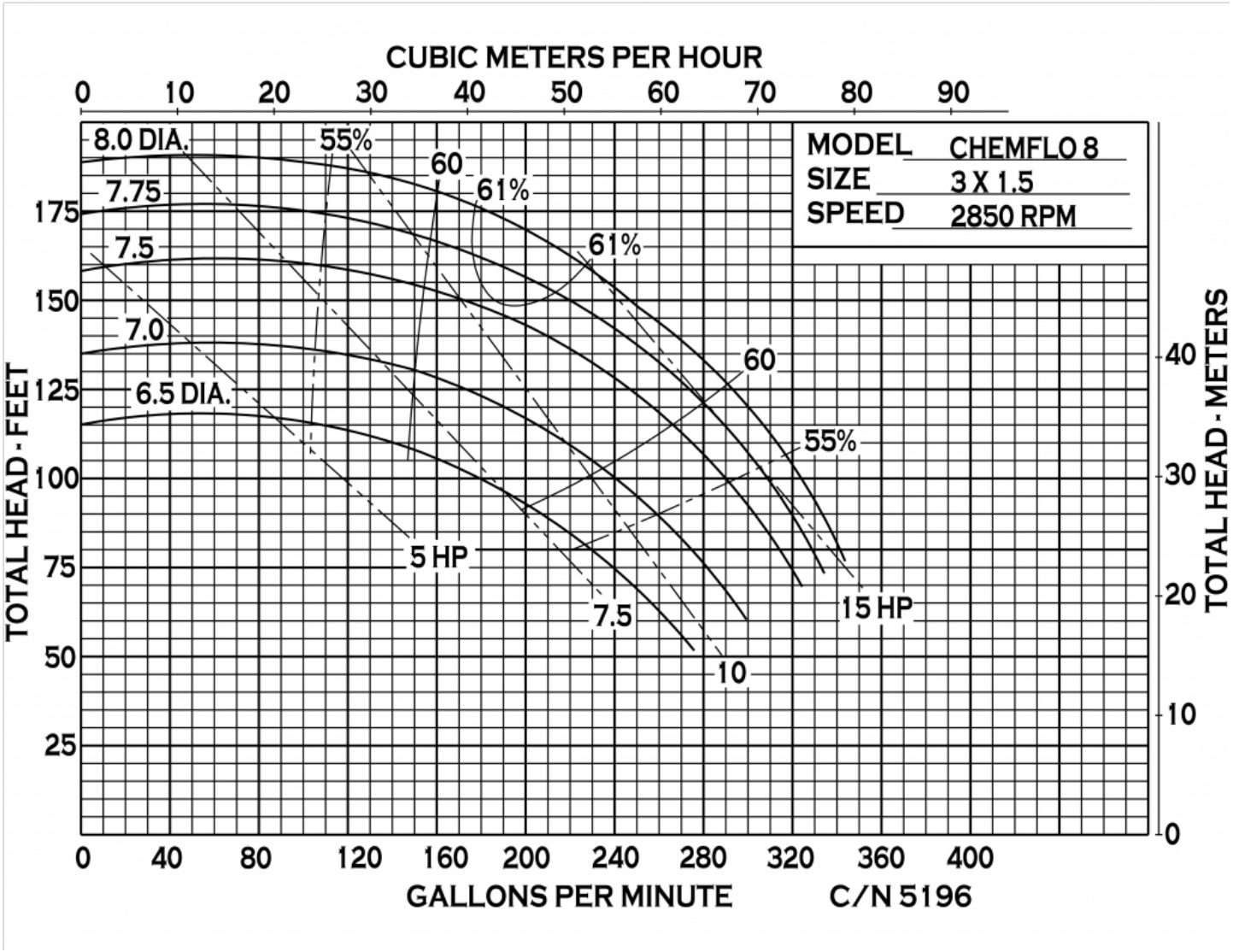

34800 BENNETT - FRASER, MI 48026-1686
(586) 293-8240 - FAX (586) 293-8469
(800) 563-8006 - www.mppumps.com

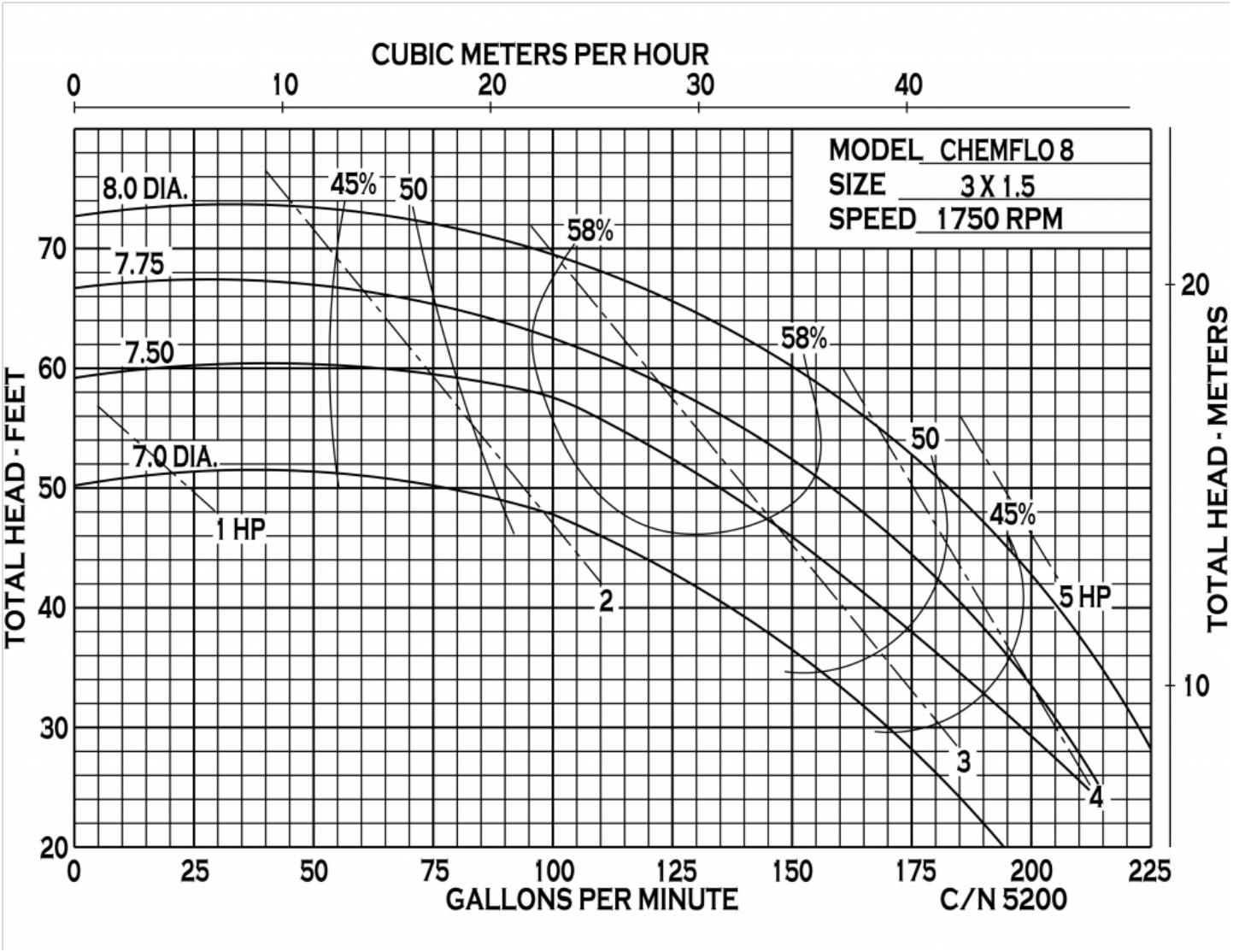

34800 BENNETT - FRASER, MI 48026-1686
(586) 293-8240 - FAX (586) 293-8469
(800) 563-8006 - www.mppumps.com

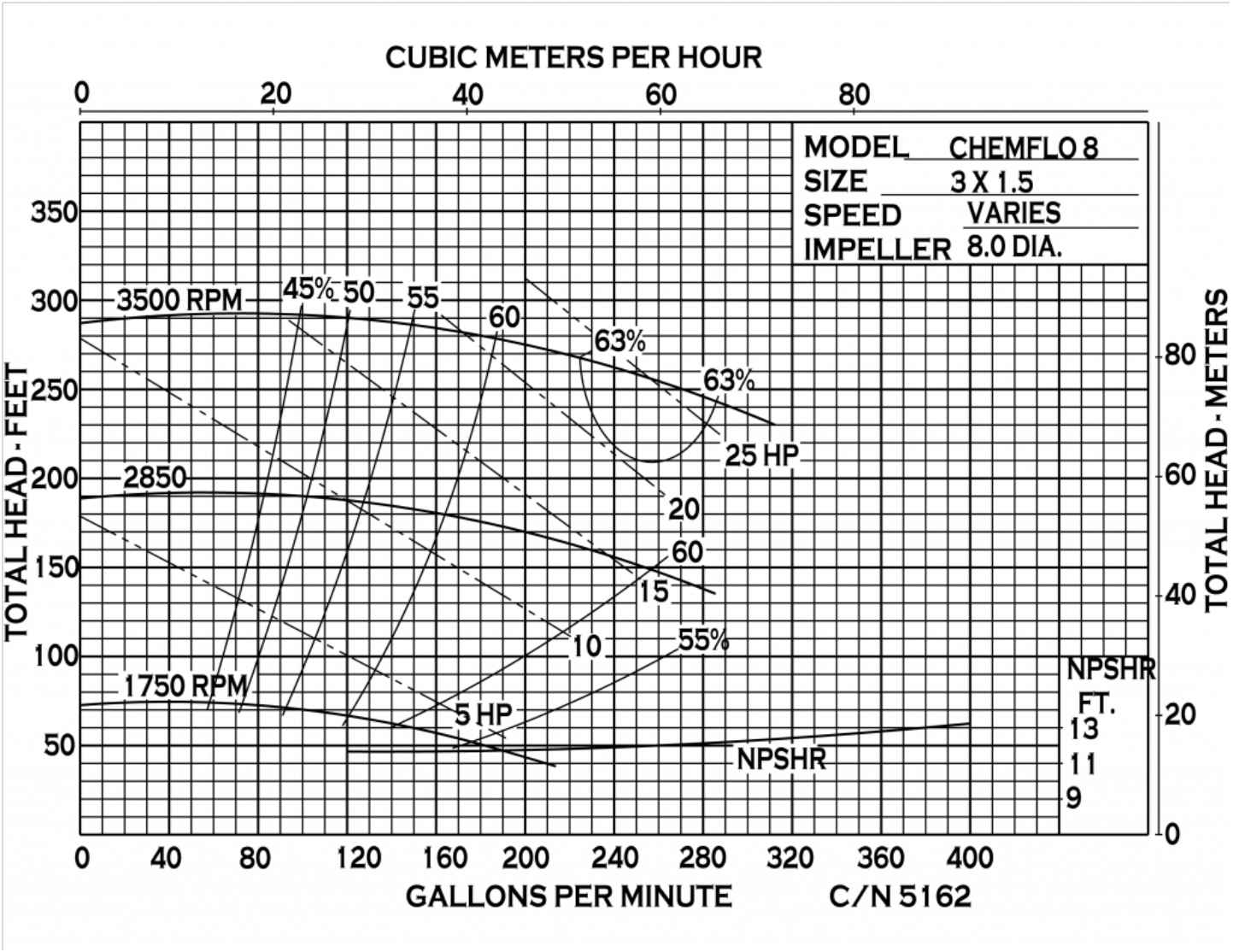

34800 BENNETT - FRASER, MI 48026-1686
(586) 293-8240 - FAX (586) 293-8469
(800) 563-8006 - www.mppumps.com

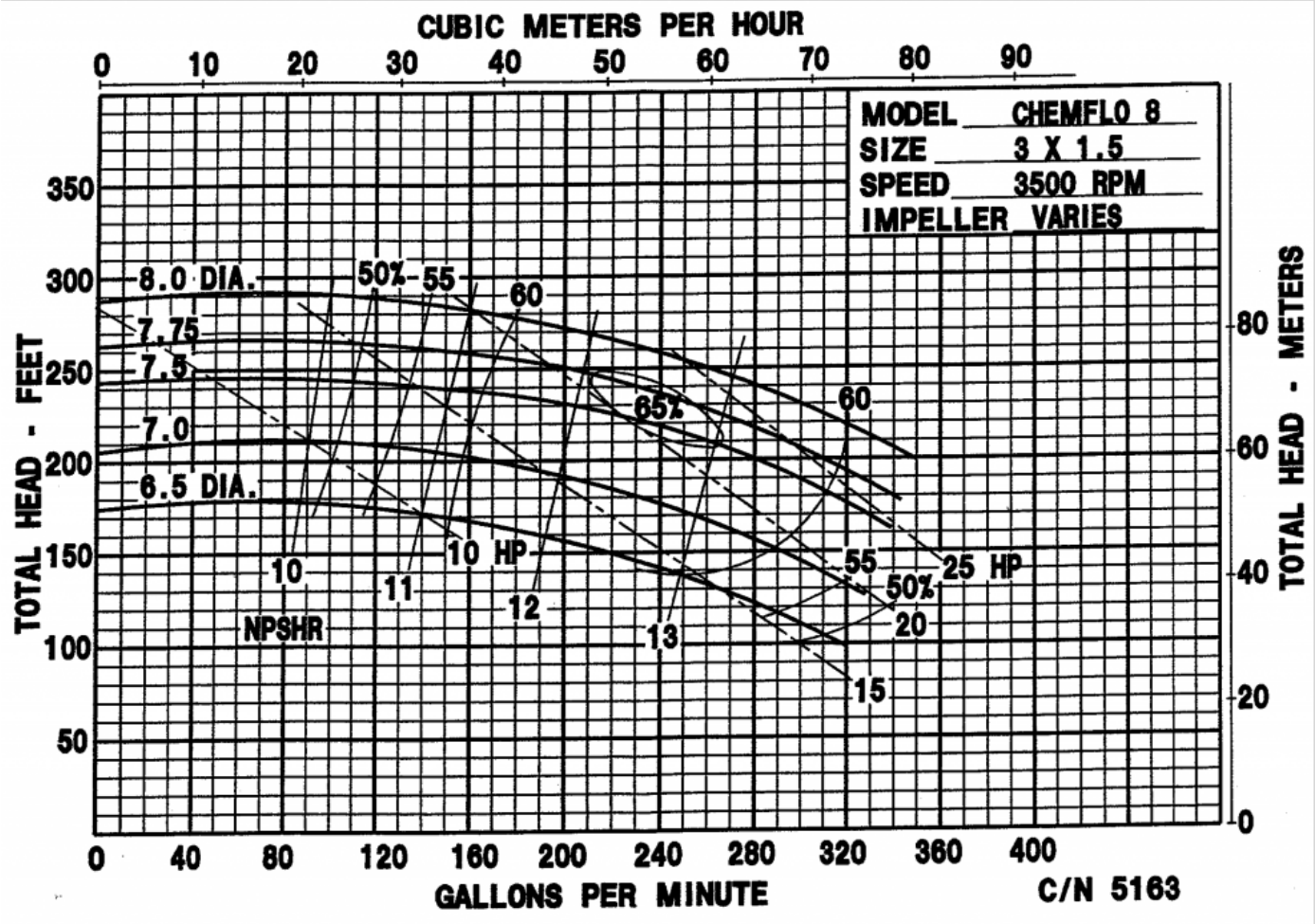

34800 BENNETT - FRASER, MI 48026-1686
(586) 293-8240 - FAX (586) 293-8469
(800) 563-8006 - www.mppumps.com

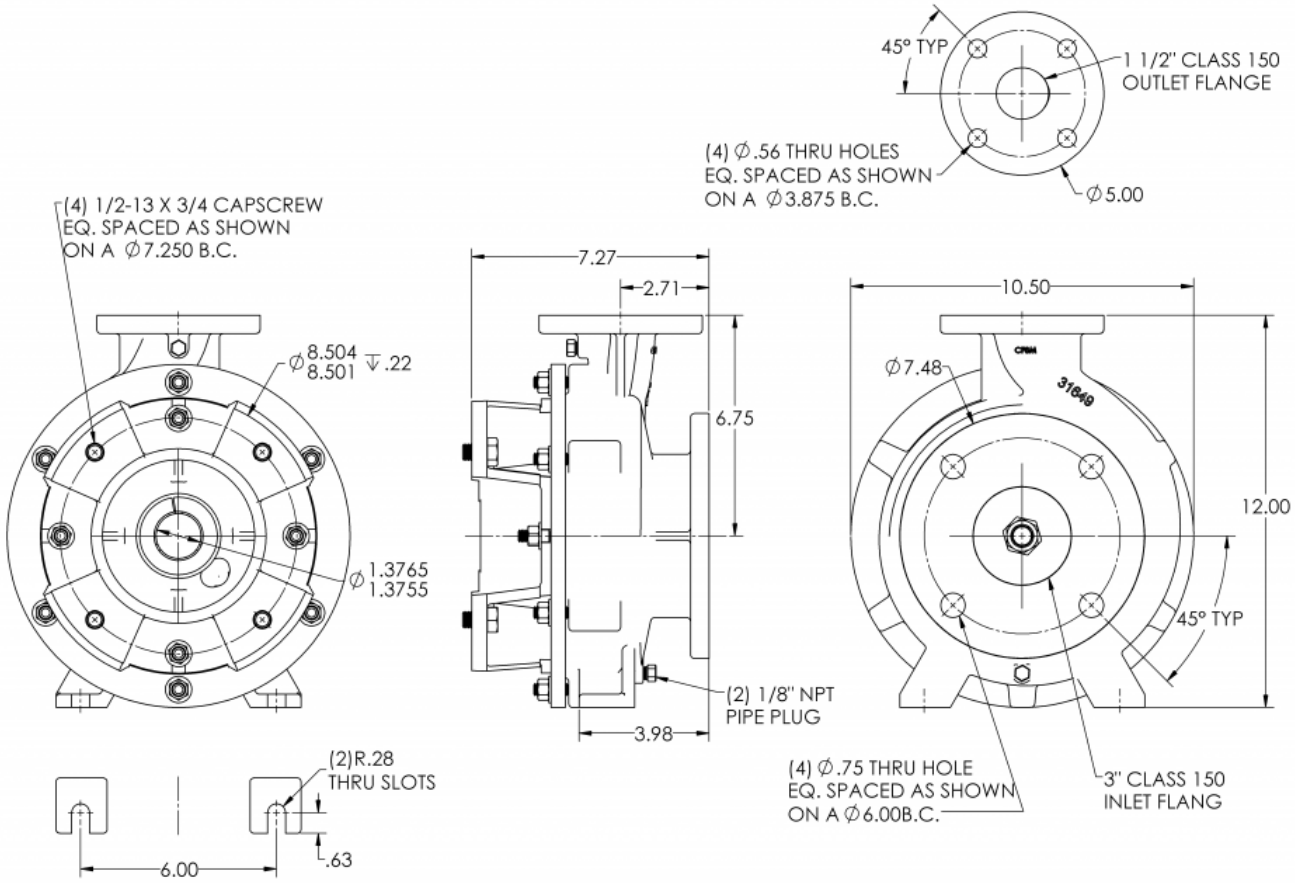

CF8 PUMPAK FOR 215TC

34800 BENNETT - FRASER, MI 48026-1686
(586) 293-8240 - FAX (586) 293-8469
(800) 563-8006 - www.mppumps.com

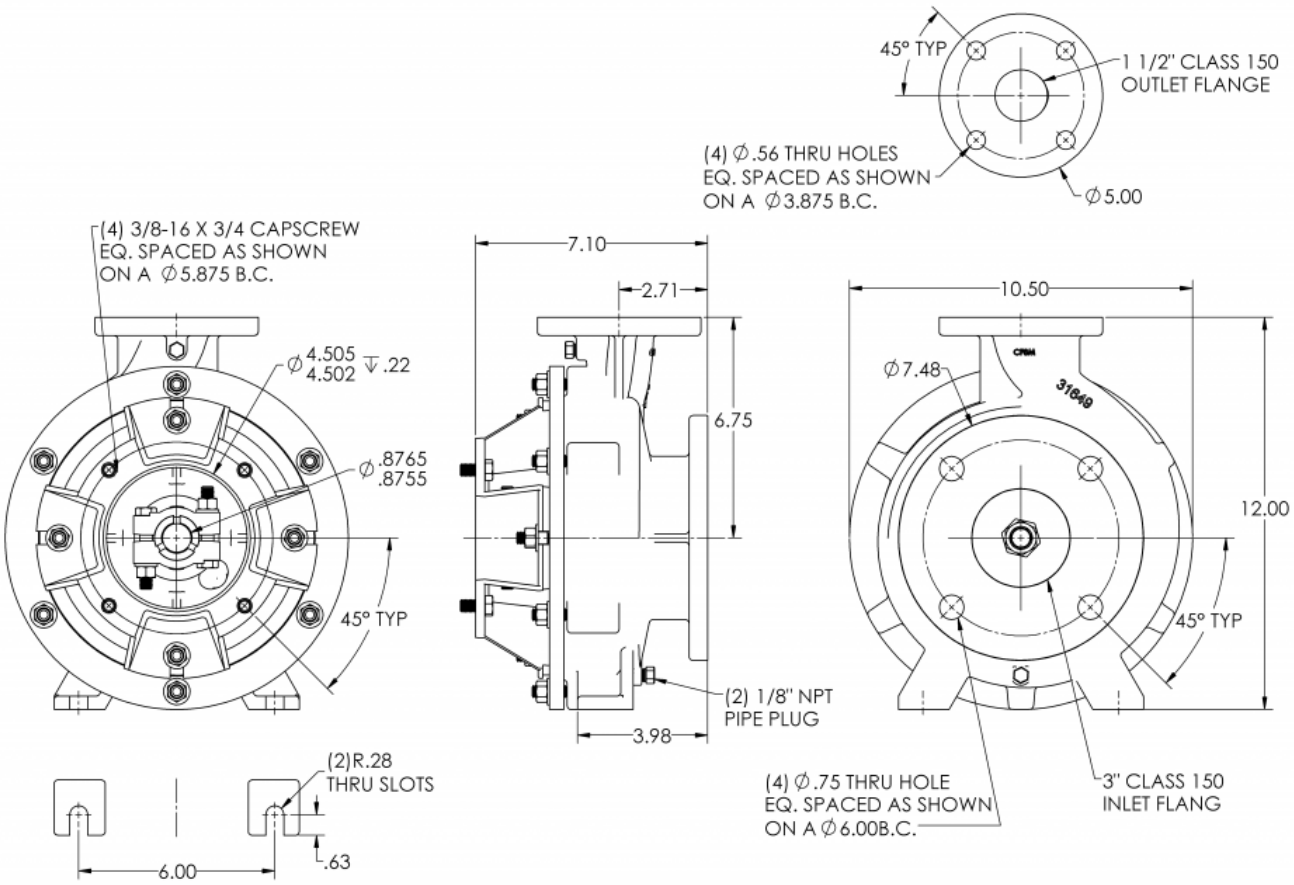

CF8 PUMPAK FOR 145TC

34800 BENNETT - FRASER, MI 48026-1686
(586) 293-8240 - FAX (586) 293-8469
(800) 563-8006 - www.mppumps.com

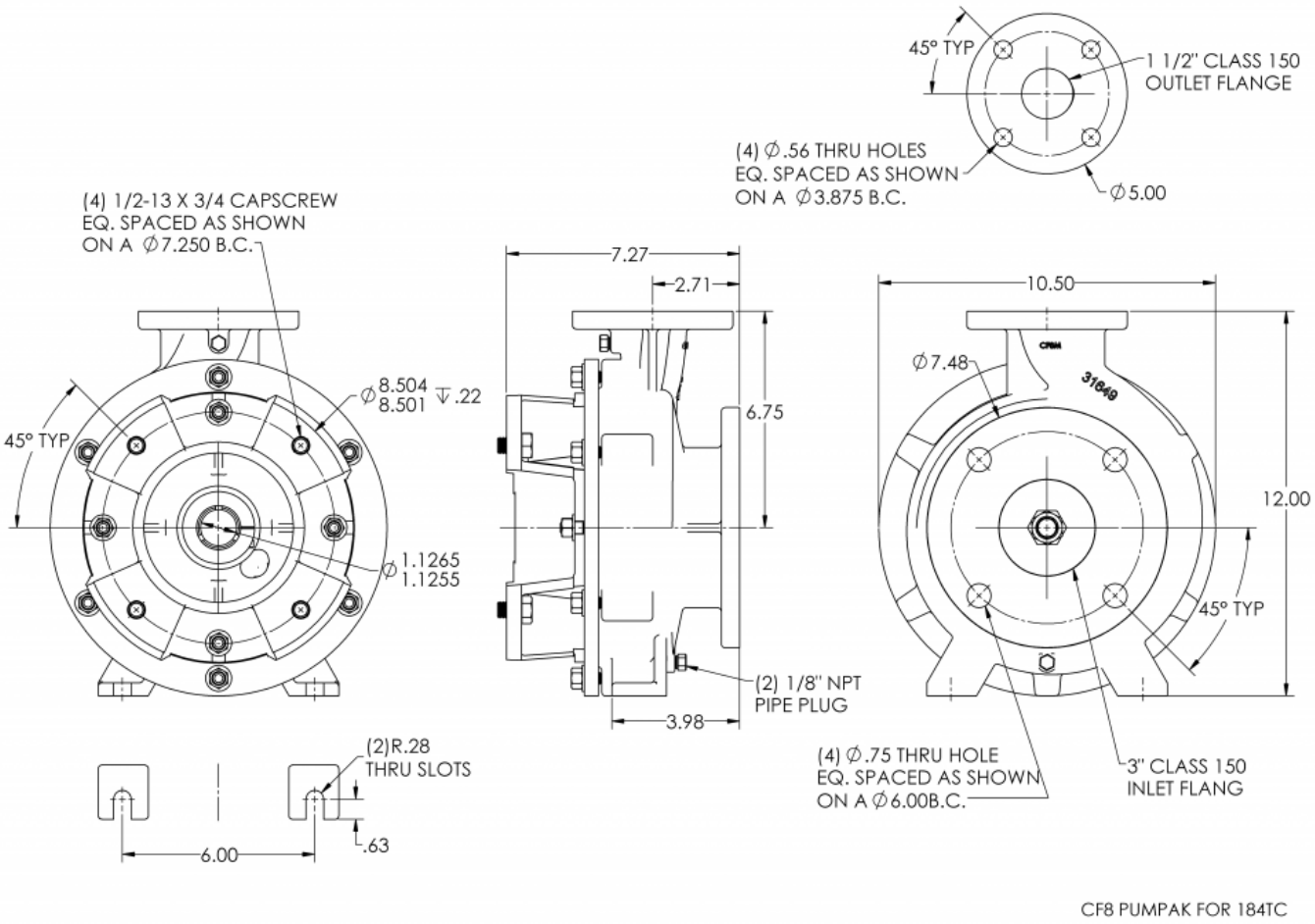

CF8 PUMPAK FOR 184TC

34800 BENNETT - FRASER, MI 48026-1686
(586) 293-8240 - FAX (586) 293-8469
(800) 563-8006 - www.mppumps.com

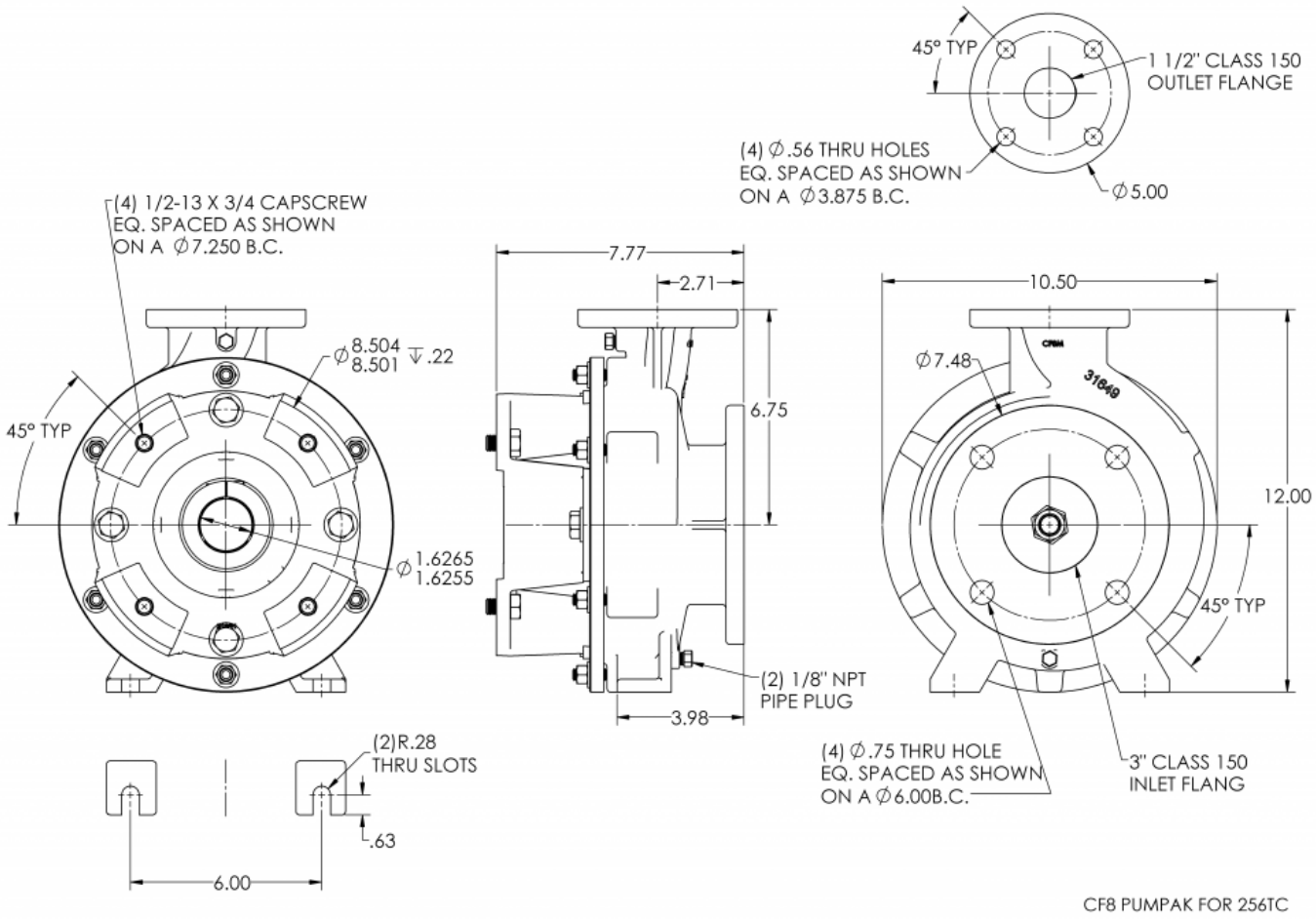

34800 BENNETT - FRASER, MI 48026-1686
(586) 293-8240 - FAX (586) 293-8469
(800) 563-8006 - www.mppumps.com

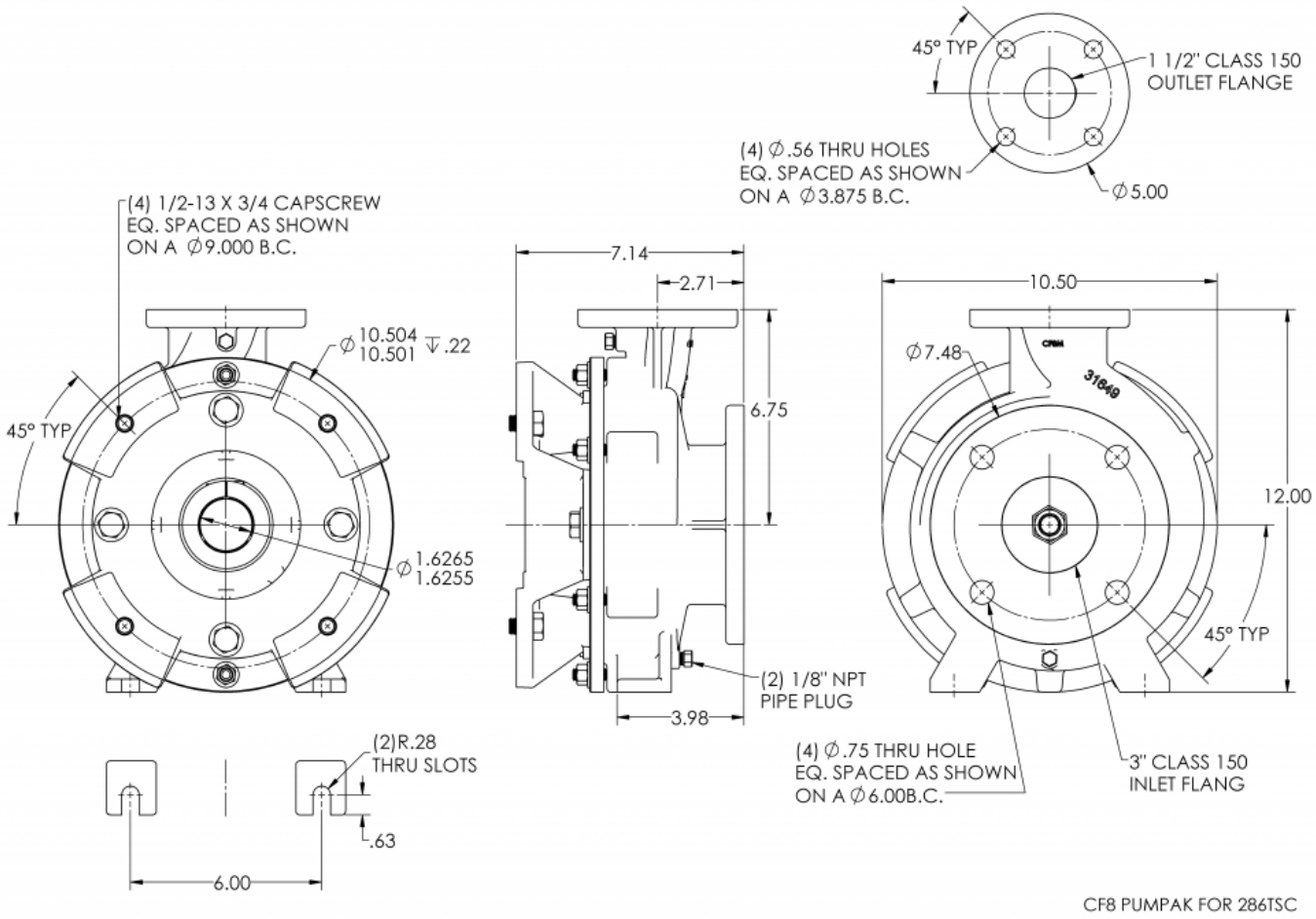

34800 BENNETT - FRASER, MI 48026-1686
(586) 293-8240 - FAX (586) 293-8469
(800) 563-8006 - www.mppumps.com

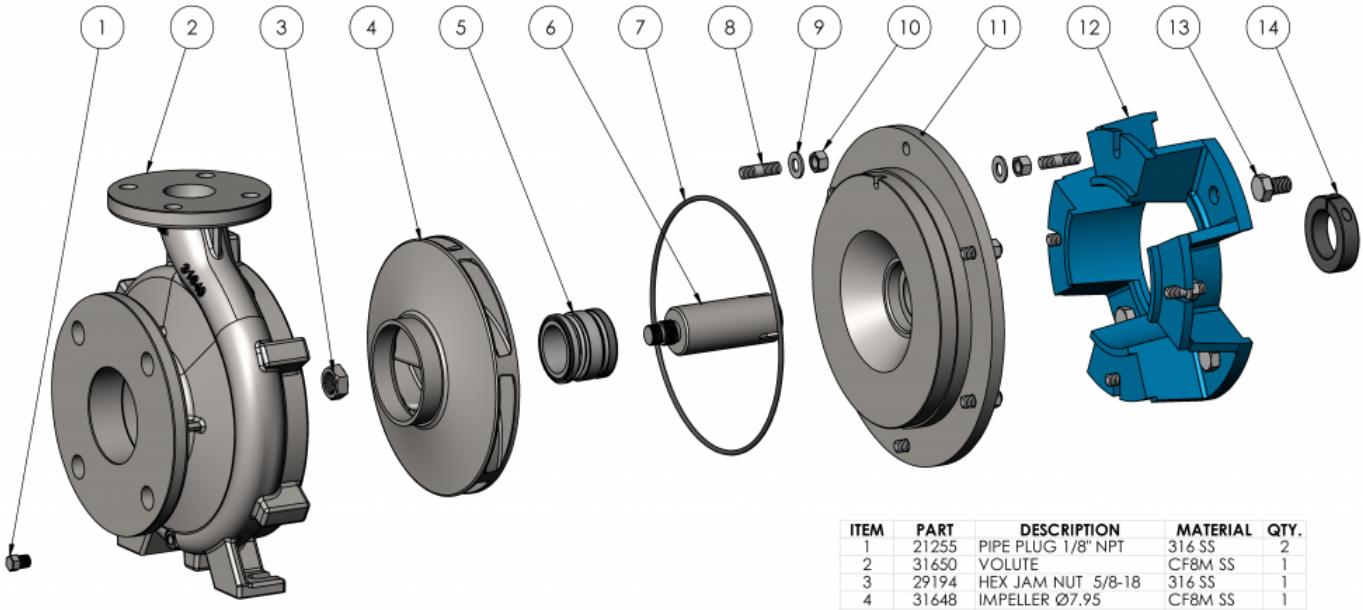

ITEM	PART	DESCRIPTION	MATERIAL	QTY.
1	21255	PIPE PLUG 1/8" NPT	316 SS	2
2	31650	VOLUTE	CF8M SS	1
3	29194	HEX JAM NUT 5/8-18	316 SS	1
4	31648	IMPELLER Ø7.95	CF8M SS	1
4	31965	IMPELLER Ø7.75	CF8M SS	1
4	31966	IMPELLER Ø7.50	CF8M SS	1
4	31966	IMPELLER Ø7.00	CF8M SS	1
4	31968	IMPELLER Ø6.50	CF8M SS	1
5	31347	SEAL ASSEMBLY 1.5"	STC/316 SS	1
5	31374	SEAL ASSEMBLY 1.5"	CCS VITON	1
5	28170	SEAL ASSEMBLY 1.5"	EPDM	1
5	26461	SEAL ASSEMBLY 1.5"	SSC	1
5	26565	SEAL ASSEMBLY 1.5"	CHEMLON	1
6	31311	DRIVE SLEEVE	316 SS	1
7	31430	O-RING AS-568-265	VITON	1
7	39262	O-RING AS-568-265	EPDM	1
7	39411	O-RING AS-568-265	BUNA	1
8	21260	STUD 3/8-16X1.32	304 SS	10
9	28053	FLAT WASHER	304 SS	10
10	21268	HEXNUT 3/8-16	304 SS	10
11	31426	SEAL HOUSING	CF8M SS	1
12	31091	MOTOR ADAPTOR	CAST IRON	1
13	31235	CAPSCREW 1/2-13X3/4	304 SS	4
14	31312	CLAMP	STEEL	1

CF8 PUMPAK FOR 215TC

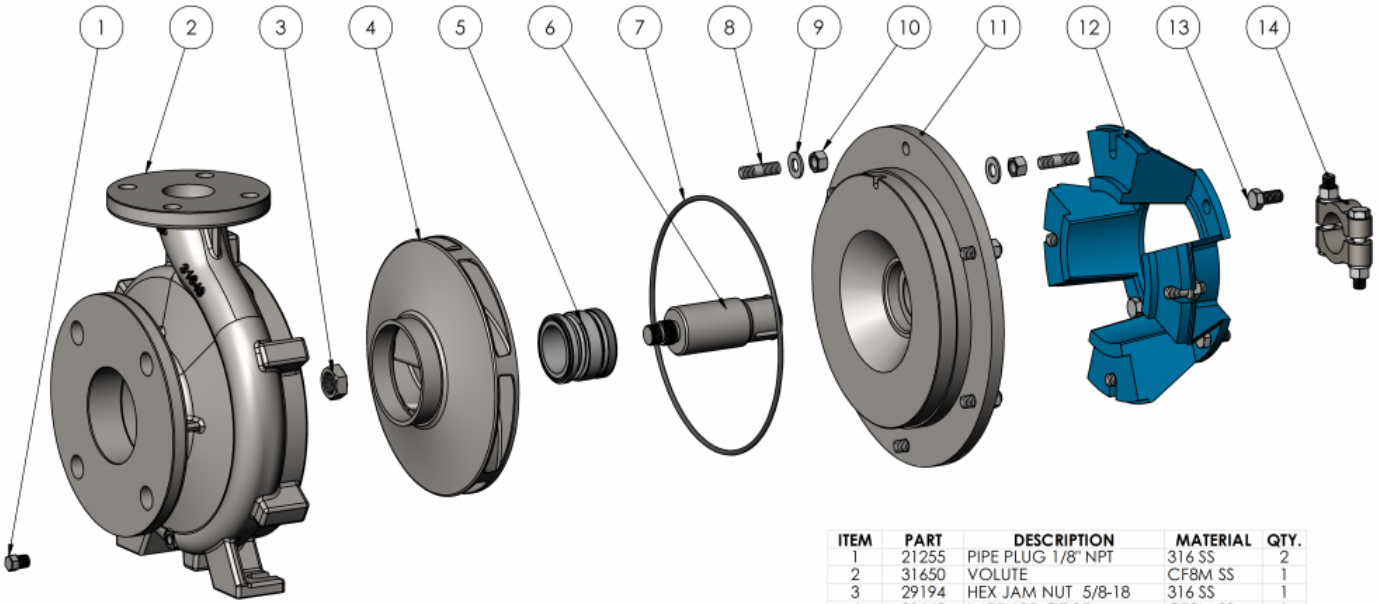

ITEM	PART	DESCRIPTION	MATERIAL	QTY.
1	21255	PIPE PLUG 1/8" NPT	316 SS	2
2	31650	VOLUTE	CF8M SS	1
3	29194	HEX JAM NUT 5/8-18	316 SS	1
4	31648	IMPELLER Ø7.95	CF8M SS	1
4	31965	IMPELLER Ø7.75	CF8M SS	1
4	31966	IMPELLER Ø7.50	CF8M SS	1
4	31966	IMPELLER Ø7.00	CF8M SS	1
4	31968	IMPELLER Ø6.50	CF8M SS	1
5	31347	SEAL ASSEMBLY 1.5"	STC/316 SS	1
5	31374	SEAL ASSEMBLY 1.5"	CCS VITON	1
5	28170	SEAL ASSEMBLY 1.5"	EPDM	1
5	26461	SEAL ASSEMBLY 1.5"	SSC	1
5	26565	SEAL ASSEMBLY 1.5"	CHEMLON	1
6	31806	DRIVE SLEEVE	316 SS	1
7	31430	O-RING AS-568-265	VITON	1
7	39262	O-RING AS-568-265	EPDM	1
7	39411	O-RING AS-568-265	BUNA	1
8	21260	STUD 3/8-16X1.32	304 SS	10
9	28053	FLAT WASHER	304 SS	10
10	21268	HEXNUT 3/8-16	304 SS	10
11	31426	SEAL HOUSING	CF8M SS	1
12	31711	MOTOR ADAPTER	CAST IRON	1
13	25663	CAPSCREW 3/8-16 X 3/4	304 SS	4
14	23039	CLAMP ASSEMBLY	303 SS	1

CF8 PUMPAK FOR 145TC

34800 BENNETT - FRASER, MI 48026-1686
(586) 293-8240 - FAX (586) 293-8469
(800) 563-8006 - www.mppumps.com

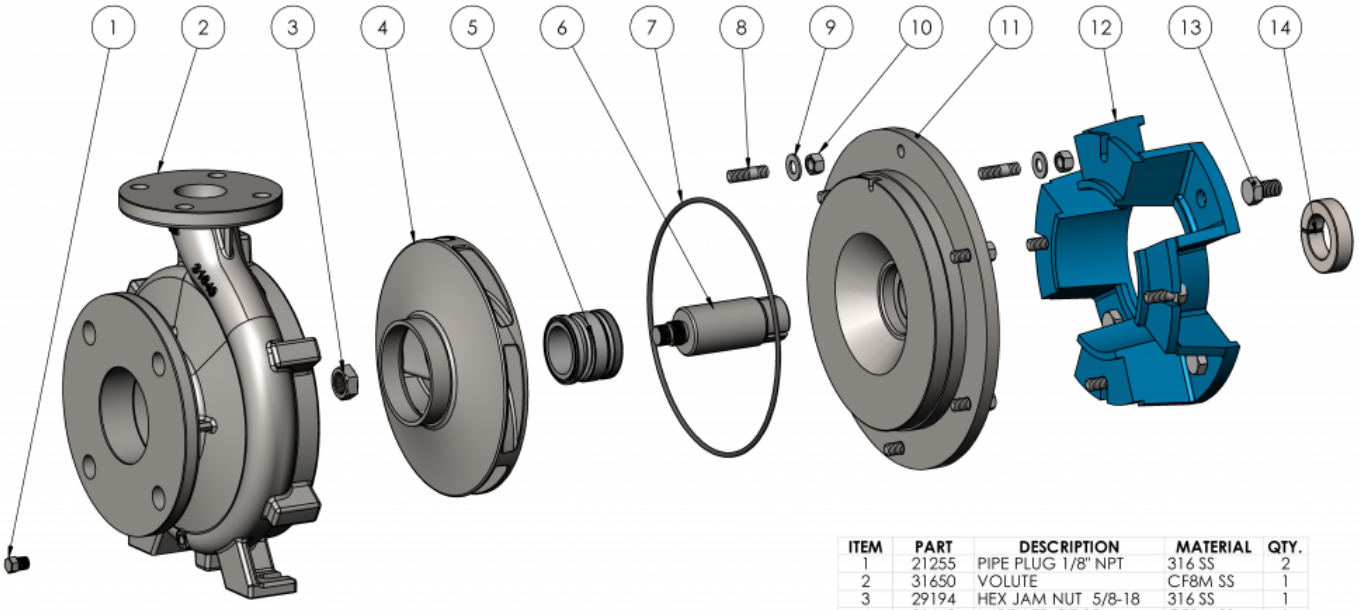

CF8 PUMPAK FOR 184TC

ITEM	PART	DESCRIPTION	MATERIAL	QTY.
1	21255	PIPE PLUG 1/8" NPT	316 SS	2
2	31650	VOLUTE	CF8M SS	1
3	29194	HEX JAM NUT 5/8-18	316 SS	1
4	31648	IMPELLER Ø7.95	CF8M SS	1
4	31965	IMPELLER Ø7.75	CF8M SS	1
4	31966	IMPELLER Ø7.50	CF8M SS	1
4	31966	IMPELLER Ø7.00	CF8M SS	1
4	31968	IMPELLER Ø6.50	CF8M SS	1
5	31347	SEAL ASSEMBLY 1.5"	STC/316 SS	1
5	31374	SEAL ASSEMBLY 1.5"	CCS VITON	1
5	28170	SEAL ASSEMBLY 1.5"	EPDM	1
5	26461	SEAL ASSEMBLY 1.5"	SSC	1
5	26565	SEAL ASSEMBLY 1.5"	CHEMLON	1
6	31094	DRIVE SLEEVE	316 SS	1
7	31430	O-RING AS-568-265	VITON	1
7	39262	O-RING AS-568-265	EPDM	1
7	39411	O-RING AS-568-265	BUNA	1
8	21260	STUD 3/8-16X1.32	304 SS	10
9	28053	FLAT WASHER	304 SS	10
10	21268	HEXNUT 3/8-16	304 SS	10
11	31426	SEAL HOUSING	CF8M SS	1
12	31091	MOTOR ADAPTOR	CAST IRON	1
13	31235	CAPSCREW 1/2-13X3/4	304 SS	4
14	31099	CLAMP	STEEL	1

34800 BENNETT - FRASER, MI 48026-1686
(586) 293-8240 - FAX (586) 293-8469
(800) 563-8006 - www.mppumps.com

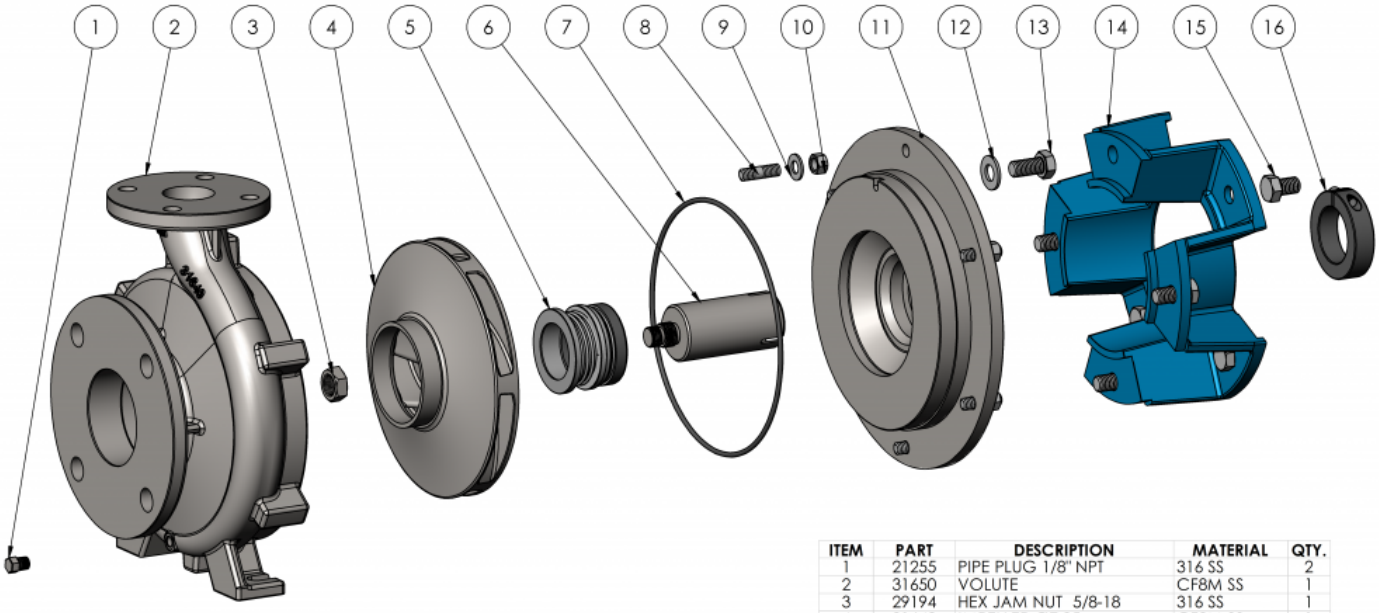

CF8 PUMPAK FOR 256TC

ITEM	PART	DESCRIPTION	MATERIAL	QTY.
1	21255	PIPE PLUG 1/8" NPT	316 SS	2
2	31650	VOLUTE	CF8M SS	1
3	29194	HEX JAM NUT 5/8-18	316 SS	1
4	31648	IMPELLER Ø7.95	CF8M SS	1
4	31965	IMPELLER Ø7.75	CF8M SS	1
4	31966	IMPELLER Ø7.50	CF8M SS	1
4	31966	IMPELLER Ø7.00	CF8M SS	1
4	31968	IMPELLER Ø6.50	CF8M SS	1
5	33326	SEAL ASSEMBLY 1.75"	CAR/CER/VIT	1
5	33327	SEAL ASSEMBLY 1.75"	STC	1
5	33328	SEAL ASSEMBLY 1.75"	CHEMLON	1
6	31833	DRIVE SLEEVE	316 SS	1
7	31430	O-RING	VITON	1
7	31430	O-RING AS-568-265	VITON	1
7	39262	O-RING AS-568-265	EPDM	1
8	39411	O-RING AS-568-265	BUNA	1
9	28053	FLAT WASHER	304 SS	6
10	21268	HEXNUT 3/8-16	304 SS	6
11	34095	SEAL HOUSING	CF8M SS	1
12	34350	FLAT WASHER 1.06X.50X.09	304 SS	4
13	33480	CAPSCREW 1/2-13X1.00	304 SS	4
14	33444	MOTOR ADAPTOR	CAST IRON	1
15	31235	CAPSCREW 1/2-13X3/4	304 SS	4
16	33036	CLAMP ASSEMBLY	STEEL	1

34800 BENNETT - FRASER, MI 48026-1686
(586) 293-8240 - FAX (586) 293-8469
(800) 563-8006 - www.mppumps.com

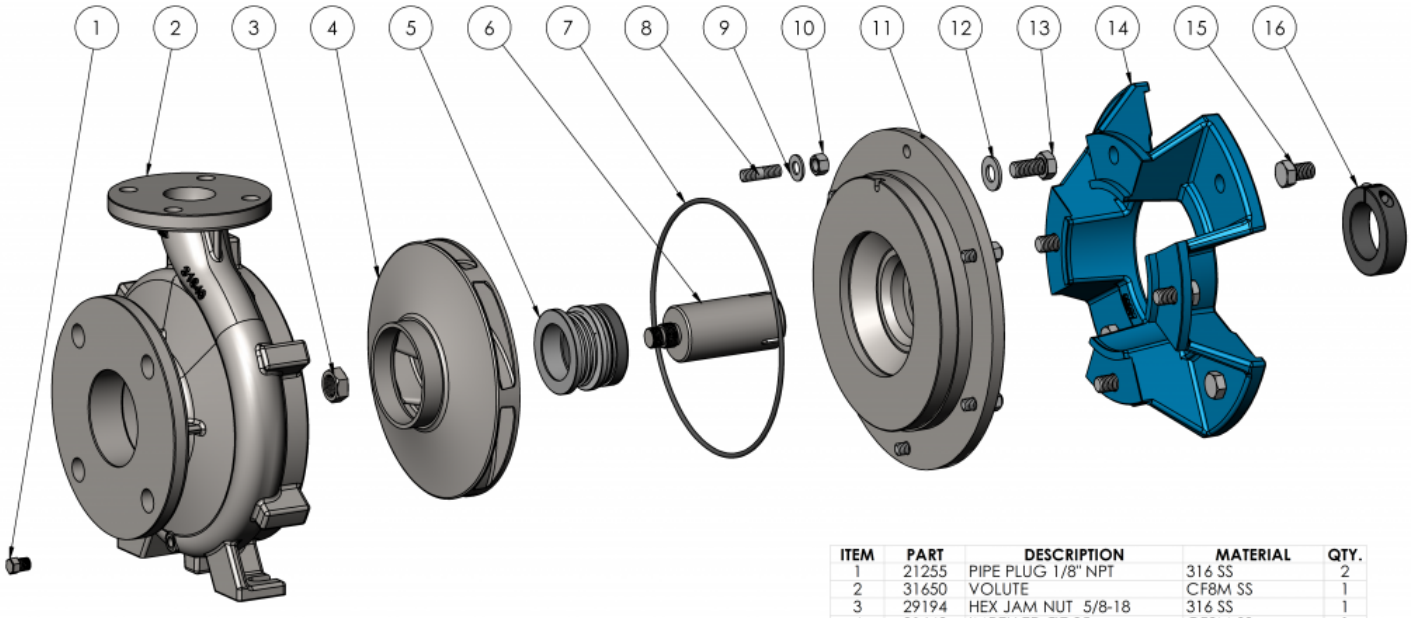

CF8 PUMPAK FOR 286TSC

ITEM	PART	DESCRIPTION	MATERIAL	QTY.
1	21255	PIPE PLUG 1/8" NPT	316 SS	2
2	31650	VOLUTE	CF8M SS	1
3	29194	HEX JAM NUT 5/8-18	316 SS	1
4	31648	IMPELLER Ø7.95	CF8M SS	1
4	31965	IMPELLER Ø7.75	CF8M SS	1
4	31966	IMPELLER Ø7.50	CF8M SS	1
4	31966	IMPELLER Ø7.00	CF8M SS	1
4	31968	IMPELLER Ø6.50	CF8M SS	1
5	33326	SEAL ASSEMBLY 1.75"	CAR/CER/VITON	1
5	33327	SEAL ASSEMBLY 1.75"	STC	1
5	33328	SEAL ASSEMBLY 1.75"	CHEMLON	1
6	31833	DRIVE SLEEVE	316 SS	1
7	31430	O-RING AS-568-265	VITON	1
7	39262	O-RING AS-568-265	EPDM	1
7	39411	O-RING AS-568-265	BUNA	1
8	21260	STUD 3/8-16X1.32	304 SS	6
9	28053	FLAT WASHER	304 SS	6
10	21268	HEXNUT 3/8-16	304 SS	6
11	34095	SEAL HOUSING	CF8M SS	1
12	34350	FLAT WASHER 1.06X.50X.09	304 SS	4
13	33480	CAPSCREW 1/2-13X1.00	304 SS	4
14	33318	MOTOR ADAPTER	CAST IRON	1
15	31235	CAPSCREW 1/2-13X3/4	304 SS	4
16	33036	CLAMP ASSEMBLY	STEEL	1