INSTRUCTION MANUAL

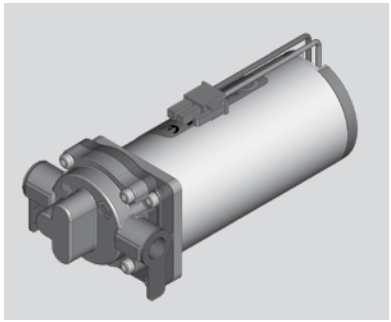

GEAR PUMPS IN PEEK, DGD PRO SERIES

INSTALLATION

Please read the following instructions carefully before conducting a new installation. DGD PRO series pumps are direct drive. They must only be handled by specialised personnel who have the basic technical knowledge related to electromechanical and hydraulic installations.

WARNINGS

DGD PRO series gear pumps are normally assembled with non-protected motors in the case of "locked rotor". This is why we recommend inserting a fuse and adequately sized components in a power supply circuit to withstand this condition.

Inadequate circuits and/or components may overheat, causing damage and/or a fire. Before connecting the motor it is necessary to check the polarity is correct. During installation be careful not to inverse the polarity, in which case the pump would rotate in the opposite direction and for some motors this could cause permanent damage to the unit itself.

The unit cannot operate continuously but only in ON/OFF cycles. It must be installed in a ventilated space in order to dissipate the heat produced by the motor. In order to avoid noise and vibrations on mechanical parts, we recommend installing the unit with rubber anti-vibration mounts. Take special care when connecting the pump to the fittings in order to prevent potential leaks. We recommend removing the plastic plugs located on the pump's intake and delivery ducts only just before mounting the fittings and pipes to prevent solid foreign objects from entering inside, as they could damage the internal components of the pump. Do not use liquid sealant as drops could fall in the ducts and cause the pump to block. For use in the food industry, the pumps (even if NSF-certified) must first be sterilised by circulating water inside them at a temperature of 80°C. The water used for this operation must not be reused during the sterilisation or thereafter, but must be flushed away. If the unit is replaced, it is necessary to ensure that the model matches the one being replaced. The circuit must be thoroughly cleaned and rinsed before starting up the unit.

GENERAL SAFETY ADVICE

1 The DGD PRO pumps are often driven with DC motors with brushes, a known source of ignition. Do not use these motors in potentially explosive atmospheres.

2 After prolonged use or applications with hot fluids, the surfaces of the pump and motor could be hot and potentially cause injury to skin or burns. After disconnecting the power supply, wait for the pump to cool down before touching it.

3 Do not place the pump near materials with low auto-ignition temperature/flammable materials. The outer surfaces of the unit can reach high temperatures. Install the pump in a dry area protected from dust, splashes and condensation.

4 Often motors are cooled by natural convection. We recommend installing the unit in areas where maximum and adequate ventilation is ensured. As an indication, the minimum distance from the walls around the unit should be at least 50 mm. Do not wrap the unit with insulation material and do not install it near hot surfaces. Do not use the pump in environments or with fluids at temperatures higher than those reported in the catalogue.

5 Check the compatibility with the fluid used beforehand. Do not use or allow the pump to come in contact with chemicals that could damage the unit.

6 An inadequate circuit could cause excessive pressure or overheating. Make sure the unit is used in accordance with to the curves in the catalogue. Install the hydraulic circuit with adequate safety margins, both in terms of pressure and temperature. We recommend a minimum safety factor of 1.5. Protect the DGD PRO units from frost. Freezing could permanently damage the pump and pipes.

7 The DGD PRO units are low voltage devices, though it is still necessary to comply with the relevant safety standards. The installer is responsible for making sure current regulations, closely associated with the final application, are complied with.

8 Insert a filter of a suitable size upstream of the pump to prevent solid particles with a diameter greater than 10µm from entering inside. The surface of the filter must be sized in relation to the flow rate and type of circuit in order to prevent excessive drops in pressure. This filter must be cleaned periodically. If the filter is not kept clean, the pump may operate in cavitation and break quickly

9 If the units are connected in circuits fitted with solenoid valves, make sure these always act with a certain delay after the motor shuts down. Solenoid valves with early or simultaneous closure can cause excessive pressure or cavitation and damage the unit and/or the hydraulic circuit.

10 We recommend inserting a fuse of a suitable size in the unit's power supply circuit to avoid damage to the unit and/or electrical circuit.

11 Make sure the electrical connections can ensure the necessary seal and insulation. Inadequate connections could cause damage.

12 Choose your DGD PRO unit model in relation to the application cycle and performance required. Using the units in harsher conditions than the ones they were designed for could cause damage. Use the unit only for the time required for the application.

PLAN THE INSTALLATION

1 Make sure the size of the electrical circuit and hydraulic circuit is suited to the electrical and hydraulic features of the DGD and DGM PRO units. Provide adequate identification for the sections of the hydraulic and electric circuit.

2 The installation must be conducted in a well ventilated, dry area protected from splashes, away from heat sources and flammable fluids. Install the pump in an accessible place to make subsequent maintenance work easier.

3 Make sure the unit is not subjected to vibration induced by the mechanical or hydraulic connection. If such a condition occurs, insulate the unit with adequate anti-vibration mounts.

4 Provide for the cabling requirements of any additional electronic boards. If the boards are fitted with heat sinks, install them adequately to favour dissipation through natural convection.

INSTALLATION

1 Secure the unit from a mechanical point of view. We recommend installing it horizontally (with the motor axis parallel to the ground) or, in the event of vertical installation, with the pump facing downwards.

2 Remove any IN/OUT protective plugs on the ducts.

3 Connect the unit to the hydraulic and electrical circuit. Make sure it does not cause mechanical stress and pay special attention to the fluid there may be in the pipes, as this must not come into contact with electrical parts. In case of negative suction head, prime the unit by pouring a little water into the pump, taking care not to wet the electrical parts. The electrical, hydraulic and mechanical connections must be able to ensure the necessary seal during operation of the unit.

4 Make sure the polarity and voltage in the electric circuit near the connection to the motor matches the data reported on the unit's plate. Identify the positive pole, which should preferably be protected by a fuse. Please remember that reversing the polarity may cause permanent damage to the unit. With the electrical circuit not powered on, connect the motor.

5 Make sure the unit is able to prime the fluid. If this does not happen after 15 seconds, check the efficiency of the intake circuit's seal. Make sure there are no leaks in the hydraulic circuit in both the delivery and in the intake section.

6 Check the operation of the valves, which must be fully open when the unit is installed. Gradually close the delivery valve until the required performance is achieved. Finally, make sure the hydraulic performance and absorption values are consistent with the ones the machine was designed for.

7 Once the pump has been primed, check if it is operating correctly. The parameters to verify this are: the rotation speed of the motor, the flow rate and pressure in relation to the power absorbed. Make sure there are no air bubbles in the delivery/ intake duct. Air bubbles could be caused by cavitation or poor seal of the pipe connected to the intake duct.

CONNECTING THE MOTOR TO THE MAINS

The electrical features of the mains must be compatible with the electrical data on the motor's plate, particularly the supply voltage and frequency. The motor must not be connected to the mains during installation.

OPERATING CONDITIONS

Make sure the pumped fluid is compatible with the materials of the pump. Fluid-o-Tech's gear pumps are designed to work only with clean fluids and are tested with water at ambient temperature. Any other fluid and/or operating condition must be verified and approved by the end customer under the actual conditions of use. Make sure the maximum temperature of the liquid and the environment are compatible with the model used.

It is necessary to use – especially on the pump's intake duct – pipes with an inner diameter adequately sized in relation to the pump's flow rate. This precaution prevents the risk of cavitation and resulting damage on the pump. The sum of the inlet and outlet pressure must not exceed the maximum system pressure indicated in the catalogue. We recommend you adapt the size of the pipe in relation to the delivery duct for pressure values at least 1.5 times the maximum pressure of the system.

The pumped fluids must not contain solid suspended particles. Before mounting the pump, we recommend installing a 10 µm filter with a surface area large enough in order to prevent excessive pressure drops in the circuit. Although occasional, particles larger than 10 µm cause premature wear of internal components. It is also important to periodically check the state of the cartridge and the filter. To monitor the filter we recommend installing a pressure-vacuum gauge after the filter. If the vacuum increases by more than 0.1 bar, the cartridge must be cleaned or replaced. Although DGD PRO gear pumps are self-priming pumps, they should operate with a positive suction head.

Indeed dry running causes premature wear of the internal components of the pump. If the water supply system operates with low pressure or no flow rate, it is necessary to install a pressure switch before the pump to turn off the motor. It is also necessary also protect the system from accidental excessive pressure with safety devices such as a bypass valve or a pressure switch connected to the motor. The solenoid valves must not be installed in the circuit but, if necessary, must only be installed on the delivery section of the pump.

We strongly recommend against installing the solenoid valves before the pump. To avoid pressure peaks it is necessary to close the solenoid valve only after the pump has stopped, then wait a few seconds after the motor has been turned off to allow it stop completely. The size of the inner diameter of the solenoid valve's duct must be adequate to the pump's flow rate.

STANDARD MAINTENANCE

DGD Pro series pumps do not require any maintenance. Replacement of parts must however be carried out by Fluid-o-Tech personnel or by an official Fluid-o-Tech repair centre.

We recommend cleaning the circuit and filters periodically to prevent cavitation and wear of the internal components of the pump.

WARRANTY TERMS AND CONDITIONS

Every pump comes with a 12-month warranty valid from the date of manufacture indicated on the label or 1000 hours of operation at a maximum pressure of 8 bar and at a maximum speed of 2800 rpm with pure water, whose suspensions are of a maximum Ø of 10µm. Plus a period of 3 months to cover transport and storage. This period shall not exceed 15 months from the date of the original invoice under any circumstances.

Fluid-o-Tech can only for held liable for the repair or replacement of defective parts returned at the customer's expense, provided that our analysis reveals that the part or parts in question were defective at the time of sale. The warranty is voided if:

- The mounting/use instructions have been disregarded.
- The pump was removed by a technician not authorised by Fluid-o-Tech and/or repaired with non-original parts.
- The pump operated with no water or under cavitation conditions.
- Solid foreign particles are found in the pump.
- Clear signs of excessive pressure are detected.
- The pump has been used for an application it was not intended for, where the operating conditions and/or the pumped liquid are incompatible with the pump itself and therefore such application had not been approved by Fluid-o-Tech.
- The warranty does not cover the normal wear of the pump.

The repair or replacement of faulty parts during the warranty period will not extend the original period of the warranty.

CERTIFICATIONS

DGD PRO series pumps are NSF certified for use with food-grade fluids. The CE label can be applied only on motor-pump units. The label cannot be applied on the pump alone in accordance with EC standard 1935:2004.

In this case the group meets the requirements of the following directives: 89/366/EEC concerning Electromagnetic Compatibility - EMC, 73/23/EEC concerning electrical equipment for use in potentially explosive atmospheres - DTB and 94/9/EC on Equipment and Safety devices intended for use in potentially explosive atmospheres - ATEX. Fluid-o-Tech is able to provide a declaration of conformity to certify compliance with the above mentioned Directives.

MANUAL - DGP en - Ed. 09/18

Fluid-o-Tech reserves the right to modify the characteristics shown at any time and without notice.

Fluid-o-Tech srl
Via Leonardo da Vinci, 40
20094 Corsico, Milano, Italy
Tel. +39 02 9995 01
Fax +39 02 9995 0999
info@fluidotech.it

Fluid-o-Tech Int'l Inc.
161 Atwater St.,
Plantsville CT (USA) 06479
Tel. +1 (860) 276 9270
Fax +1 (860) 620 0193
info@fluid-o-tech.com

Fluid-o-Tech Int'l Inc. Japan
2nd Floor, 4-3-8, Espoir Todoroki,
Todoroki, Setagaya, Tokyo 158-0082
Tel. +81 (0) (3) 6432 1812
Fax +81 (0) (3) 6432 1813
erkkato@fluidotech.jp

Fluid-o-Tech Asia (Shanghai) Co., Ltd.
2/F, Factory building 6 (1), No. 258, Zhijiang Road,
Fengxian District, Shanghai City, Z.P.: 201499 China
Tel. +86 (021) 67100 838
Fax +86 (021) 67100 605
info@fluidotech-asia.com