CALL TOLL FREE 877-742-2878 FOR SALES AND SUPPORT. CLICK HERE TO RETURN TO WEBSITE

EchoPulse® LR25

Pulse Radar Liquid Level Transmitter

FLOWLINE™ LEVEL BEST

Application

The general purpose 6.3 GHz. pulse radar transmitter provides continuous level measurement up to 114.8' (35m) with a 4-20 mA signal output, and is configured via its integral push button display module. The non-contact liquid level sensor is intended for chemical and petroleum storage or process applications in above grade metal or reinforced concrete tanks or below grade tanks of any material. Select this sensor for harsh process conditions with corrosive or low dielectric media, heavy surface foam or agitation, higher pressure, steam, condensation or vapor, and installation in a flange fitting. Due to the wider beam angle, special attention should be given to ensure that the sensor is located with unobstructed measurement space. Typical applications include process tanks.

RoHS Compliant CE FC CRN



LR25-0310-40 Shown

Features

- 316L antenna with PTFE inner shield for corrosive media
- Simple configuration via integral push button display module
- 6.3 GHz. pulse radar is unaffected by most foam and agitation
- 12" (30cm) dead band enables utilization of the entire tank
- LCD displays level in feet or meters with percent of span bar
- Optional display mode indicates the echo signal return curve
- Auto-temperature compensation for accurate measurement
- Fail-safe diagnostics with selectable signal fail-safe outputs
- Recognition, storage and rejection of false echo signal returns
- Rugged IP67 aluminum enclosure with polycarbonate window

Success

Based upon the type of inflow and system design, not all wastewater neutralization processes are the same. Here, a LR25 is mounted on a 12' neutralization tank with agitation, foam and vapor. Its wide beam, low frequency, 6 GHz. pulse radar measurement is unaffected by most process conditions, and is the right choice for difficult applications where other level sensors may not perform.





EchoPulse® LR25

Pulse Radar Liquid Level Transmitter

FLOWLINE™ LEVEL BEST

Specifications

Range:	12” to 114.8’ (30cm to 35m)
Frequency:	6.3 GHz.
Accuracy:	± 10mm
Dead band:	12” (30cm)
Beam angle:	20°
Configuration:	Push button
Memory:	Non-volatile
Display type:	LCD, dot matrix
Display units:	Feet and meters
Display bar:	Percent of span
Display graph:	Echo signal curve
Supply voltage:	16-26 VDC
Max. consumption:	22.5 mA
Signal output:	4-20 mA, two-wire
Signal invert:	4-20 mA, 20-4 mA
Signal fail-safe:	3.9 mA, 20.5 mA, 22 mA
Process temp.:	F: -40° to 266°
	C: -40° to 130°
Temp. comp.:	Automatic
Storage temp.:	F: -40° to 176°
	C: -40° to 80°
Pressure:	-14.5 to 580 psi (-1 to 40 bar)
Enclosure rating:	IP67
Encl. material:	Aluminum w/silicone gasket
Encl. window mat.:	Polycarbonate
Conduit entrance:	(1) 1/2” NPT connector
	(1) M20 x 1.5 plug
Antenna material:	316L w/PTFE inner shield
Process mount:	- 40: 4” flange (ANSI)
	- 60: 6” flange (ANSI)
Classification:	General purpose
Certification:	cTUVus
	FCC
Compliance:	CE, CRN, RoHS

Dimensions

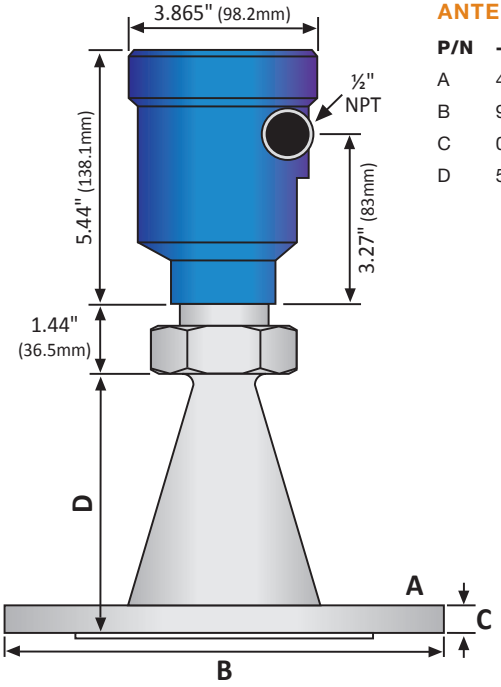

ANTENNA / FLANGE

P/N	-40	-60
A	4” ANSI	6” ANSI
B	9.0” (228.6mm)	11.0” (279.4mm)
C	0.57” (14.5mm)	0.63” (16.1mm)
D	5.7” (145mm)	9.7” (247.7mm)

Compatible Products



LI25

DATALOOP™

Level Indicator



LI55

DATAVIEW™

Level Controller

Ordering

LR25-0310- ☐ **0**

FLANGE SIZE (1)

4	4” ANSI
6	6” ANSI



NOTES

1) If you want help in selecting a sensor for your application, please go to our website and submit a Level Questionnaire. An engineer will review your requirements and suggest a product solution via email.