CALL TOLL FREE 877-742-2878 FOR SALES AND SUPPORT

Return to BurtProcess.com

ECLIPSE®

EXTERNAL GEAR PUMP

Flow:
up to 33 gpm (125 lpm)

Differential Pressure:
up to 150 psi (10.3 bar)

Working Pressure:
up to 300 psi (20.7 bar)

Temperature:
from -40 to 300°F (-40 to 149°C)

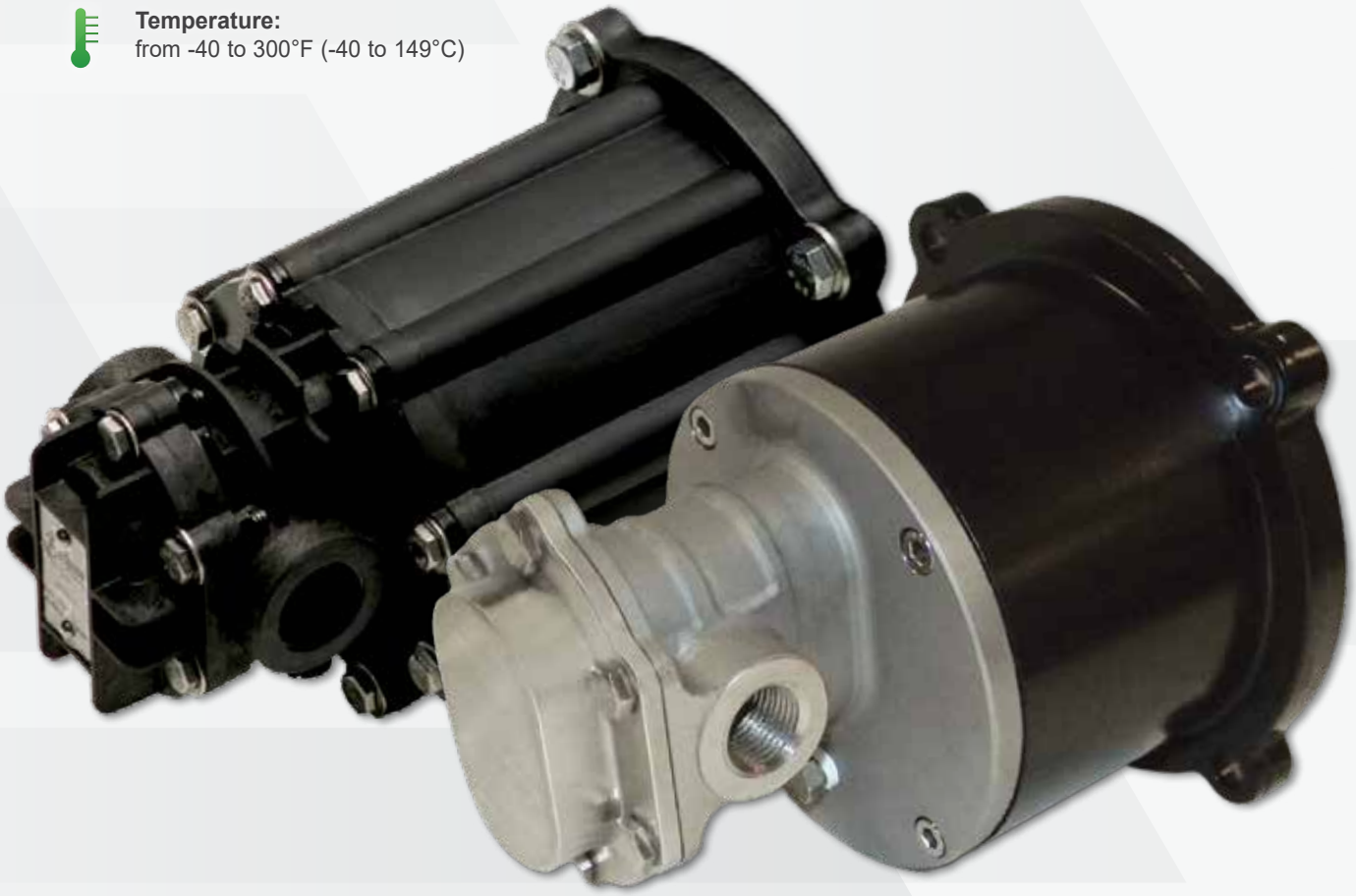

NSF/ANSI 61* Ex CE
*Non-metallic Only

PULSAFEEDER®



ECLIPSE®

PULSAFEEDER EXPERTISE

For over 70 years, Pulsafeeder, Inc. has been recognized as a world leader in fluid handling technology and innovation in chemical dosing. With extensive experience in providing fluid handling solutions, our pumps are designed to handle even the toughest applications. Known for rugged construction and dependable performance, our products are manufactured with excellence and the highest
quality standards.

The Eclipse represents a dramatic advance in pump technology. Combining proven design principles with patented features, our pumps are safe, simple, and reliable. Structurally rugged with corrosion-resistant materials, Eclipse is an ideal fit for many corrosive liquids. From acids to bases, we cover the entire pH scale.

The innovative technology behind Eclipse supports its ability to handle the most corrosive chemicals with a simple-to-service, front pull-out design. Eclipse is available with wetted components in completely non-metallic construction and 316SS. These material offerings ensure corrosion resistance over a wide range of chemicals and process conditions. These pumps are magnetically driven to eliminate mechanical seal wear and leaks associated with rotating seals. The patented bearing design promotes constant lubrication.

PRODUCT SPECIFICATIONS

Markets

- Chemical Processing
- Oil & Gas
- Petrochemical
- Wastewater Treatment
- Water Treatment - Power
- Water Treatment - Municipal

Typical Chemicals

- Sodium Hypochlorite
- Hydrogen Peroxide
- Sulfuric Acid
- Solvents
- Caustic
- Polymers
- Dyes & Inks
- Catalyst
- Cleaning Agents
- Flocculants
- Adhesives & Resins
- Acids

COMPONENTS

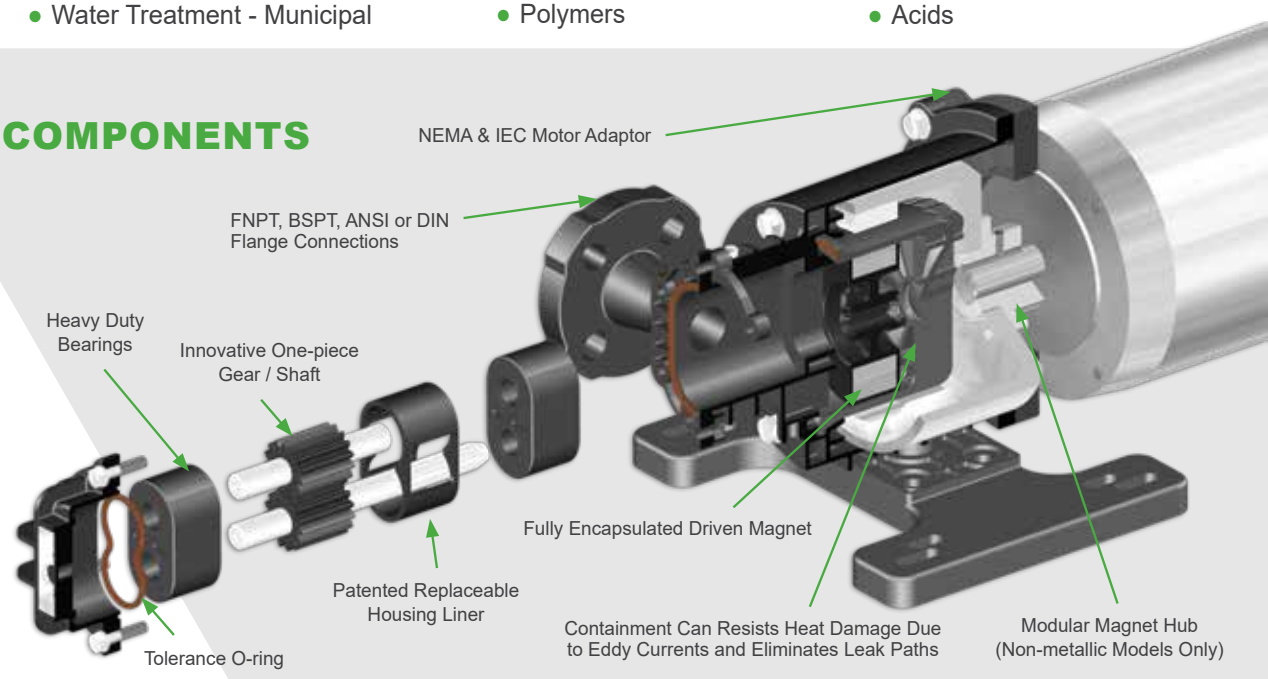

FEATURES

DESIGNED FOR SIMPLICITY

- Fewest number of components of any external gear pump on the market
- Simplified ordering and inventory with fewer parts
- Self-aligning parts and piloted fits ensure proper assembly every time



RENEWABLE PERFORMANCE

- Patented housing liner protects the housing from wear
- Easy maintenance KOPkit® (Keep On Pumping kit) saves time and money
- Regain performance flow with a KOPkit®



HEAVY DUTY BEARINGS & TOLERANCE O-RING

- Bearings have large wear areas
- Patented bearings are made from self-lubricating materials
- Tolerance O-ring maintains proper internal operating clearances



MAGNETICALLY DRIVEN SEALLESS DESIGN

- Eliminates costly seal flush systems required for double mechanical seals
- Patented drive shaft spline design optimizes magnet alignment on shaft
- Fully encapsulated driven magnets offer maximum corrosion resistance
- Sealless design ensures zero leakage



UNIVERSAL FLANGES

- Standard housings mate to both ANSI and DIN flange connections
- PTFE or Viton® inserts act as a gasket and can be reused or replaced to ensure a proper seal (Non-metallic only)



UNIVERSAL MOTOR ADAPTOR

- Standard adaptors easily mate to multiple NEMA and IEC motors
- Wide range of motor adaptors allow for easy installation in retrofit applications

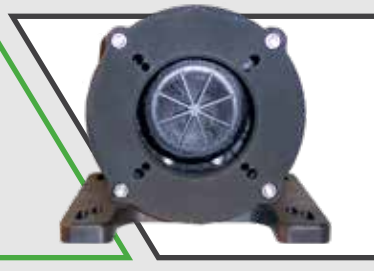

E02 MODEL

PRODUCT SPECIFICATIONS

Flow:
up to 0.45 gpm (1.7 lpm)

Differential Pressure:
up to 150 psi (10.3 bar)

Working Pressure:
up to 200 psi (13.8 bar) Non-metallic
up to 300 psi (20.7 bar) Metallic

Temperature:
up to 200°F (93°C) Non-metallic
up to 300°F (149°C) Metallic

Viscosity:
up to 1,000 cPs



NSF/ANSI 61*
*Non-metallic Only

DIMENSIONAL DRAWINGS

Non-metallic

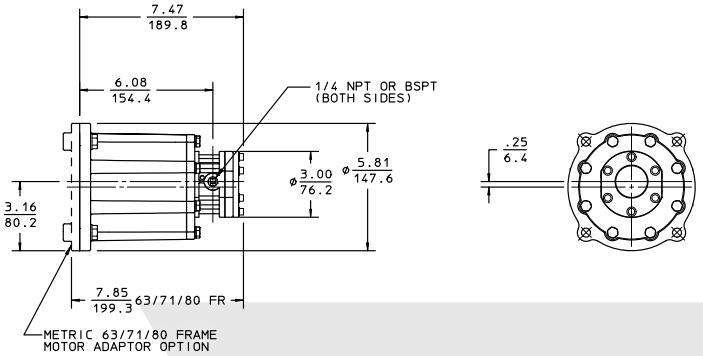

Metallic

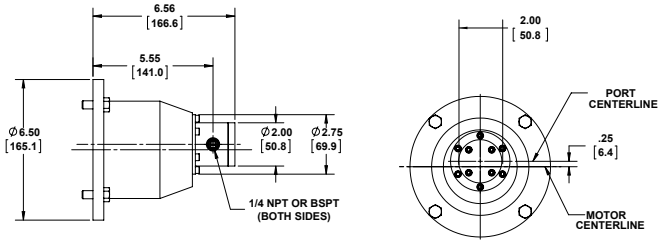

Note: For additional detailed dimensional drawings, refer to the model tech sheets on www.pulsa.com.

MATERIALS OF CONSTRUCTION

Housing	PVDF	316SS
Magnet	Neodymium encapsulated in natural ETFE	Samarium Cobalt
Liner	Carbon reinforced PTFE	Carbon reinforced PTFE
Bearings	Carbon Graphite or Graphite impregnated Silicon Carbide	Carbon Graphite, Graphite impregnated Silicon Carbide, or PTFE
O-rings	Viton®, EPDM, and Perfluoroelastomer	PTFE and Perfluoroelastomer

E05 MODEL

PRODUCT SPECIFICATIONS

Flow:
up to 1.6 gpm (6.1 lpm)

Differential Pressure:
up to 150 psi (10.3 bar)

Working Pressure:
up to 200 psi (13.8 bar) Non-metallic
up to 300 psi (20.7 bar) Metallic

Temperature:
up to 200°F (93°C) Non-metallic
up to 300°F (149°C) Metallic

Viscosity:
5,000 cPs (consult factory for above 5,000 cPs)

NSF/ANSI 61*
*Non-metallic Only



Metallic version includes bearing flush ports per drawing below

DIMENSIONAL DRAWINGS

Non-metallic

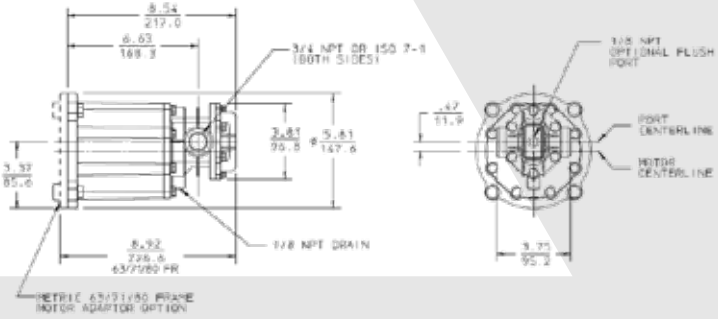

Metallic

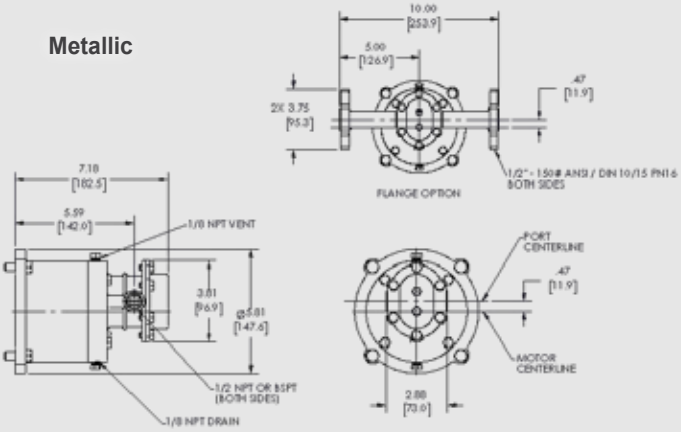

Note: For additional detailed dimensional drawings, refer to the model tech sheets on www.pulsa.com.

MATERIALS OF CONSTRUCTION

Housing	PVDF	316SS
Magnet	Neodymium encapsulated in natural ETFE	Neodymium or Samarium Cobalt
Liner	Carbon reinforced PTFE	Carbon reinforced PTFE
Bearings	Carbon Graphite or Graphite impregnated Silicon Carbide	Carbon Graphite, Graphite impregnated Silicon Carbide, or PTFE
O-rings	Viton®, EPDM, and Perfluoroelastomer	PTFE and Perfluoroelastomer

E12 MODEL

PRODUCT SPECIFICATIONS

Flow:
up to 3.5 gpm (13.2 lpm)

Differential Pressure:
up to 150 psi (10.3 bar)

Working Pressure:
up to 200 psi (13.8 bar) Non-metallic
up to 300 psi (20.7 bar) Metallic

Temperature:
up to 200°F (93°C) Non-metallic
up to 300°F (149°C) Metallic

Viscosity:
5,000 cPs (consult factory for above 5,000 cPs)

NSF/ANSI 61*
*Non-metallic Only



Metallic version includes bearing flush ports per drawing below

DIMENSIONAL DRAWINGS

Non-metallic

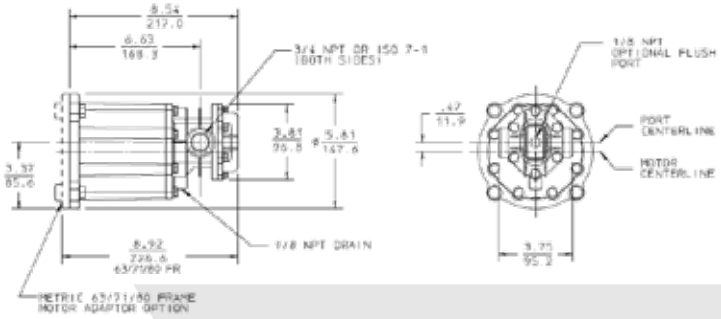

Metallic

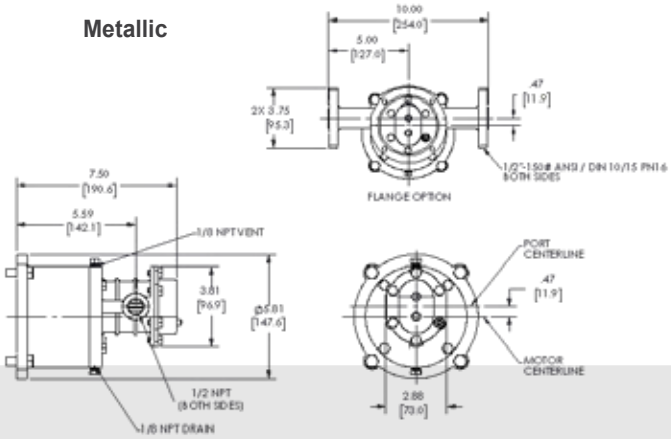

Note: For additional detailed dimensional drawings, refer to the model tech sheets on www.pulsa.com.

MATERIALS OF CONSTRUCTION

Housing	PVDF	316SS
Magnet	Neodymium encapsulated in natural ETFE	Neodymium or Samarium Cobalt
Liner	Carbon reinforced PTFE	Carbon reinforced PTFE
Bearings	Carbon Graphite or Graphite impregnated Silicon Carbide	Carbon Graphite, Graphite impregnated Silicon Carbide, or PTFE
O-rings	Viton®, EPDM, and Perfluoroelastomer	PTFE and Perfluoroelastomer

E25 MODEL

PRODUCT SPECIFICATIONS

Flow:
up to 7.4 gpm (28 lpm)

Differential Pressure:
up to 150 psi (10.3 bar)

Working Pressure:
up to 200 psi (13.8 bar) Non-metallic
up to 300 psi (20.7 bar) Metallic

Temperature:
up to 200°F (93°C) Non-metallic
up to 300°F (149°C) Metallic

Viscosity:
5,000 cPs (consult factory for above 5,000 cPs)

NSF/ANSI 61* CE
*Non-metallic Only



Metallic version includes bearing flush ports per drawing below

DIMENSIONAL DRAWINGS

Non-metallic

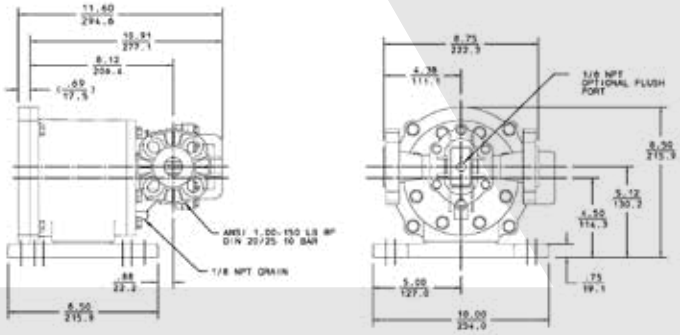

Metallic

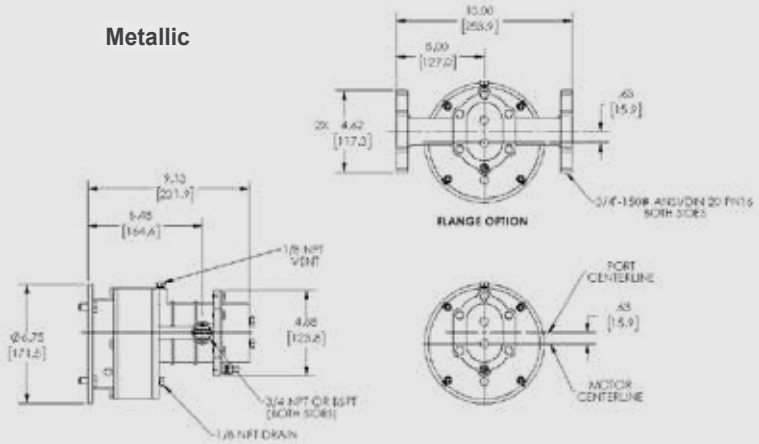

Note: For additional detailed dimensional drawings, refer to the model tech sheets on www.pulsa.com.

MATERIALS OF CONSTRUCTION

Housing	PVDF	316SS
Magnet	Neodymium encapsulated in natural ETFE	Neodymium or Samarium Cobalt
Liner	Carbon reinforced PTFE	Carbon reinforced PTFE
Bearings	Carbon Graphite or Graphite impregnated Silicon Carbide	Carbon Graphite, Graphite impregnated Silicon Carbide, or PTFE
O-rings	Viton®, EPDM, and Perfluoroelastomer	PTFE and Perfluoroelastomer

E75 & E125 MODEL

PRODUCT SPECIFICATIONS

Flow:
up to 33 gpm (125 lpm)

Differential Pressure:
up to 150 psi (10.3 bar)

Working Pressure:
up to 200 psi (13.8 bar) Non-metallic
up to 300 psi (20.7 bar) Metallic

Temperature:
up to 200°F (93°C) Non-metallic
up to 300°F (149°C) Metallic

Viscosity:
5,000 cPs (consult factory for above 5,000 cPs)

NSF/ANSI 61*
*Non-metallic Only

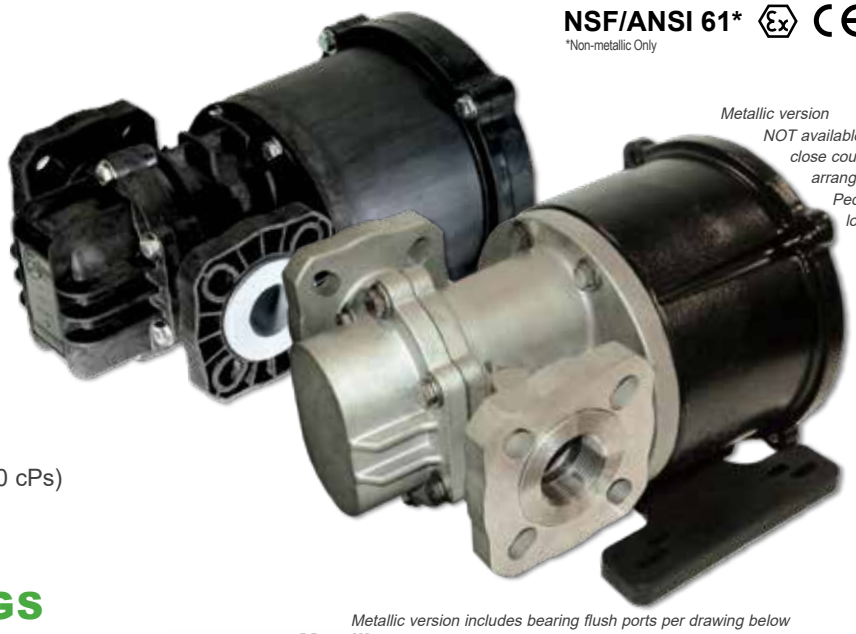

Metallic version NOT available with close coupled motor arrangement. Pedestal for long coupling is included as shown in drawing below.

DIMENSIONAL DRAWINGS

Metallic version includes bearing flush ports per drawing below

Non-metallic

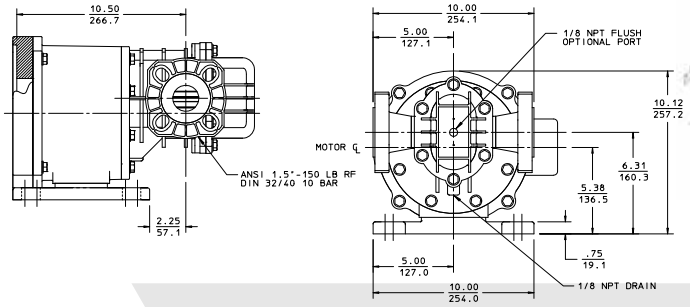

Metallic

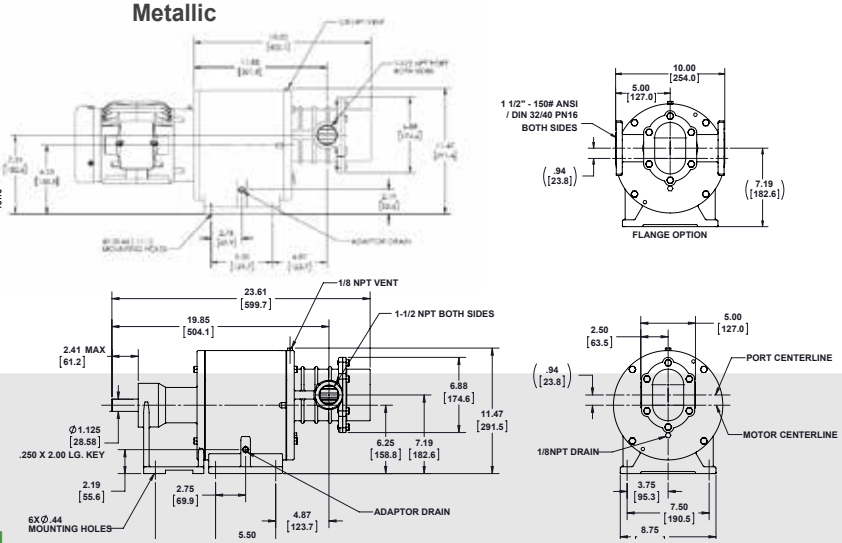

Note: For additional detailed dimensional drawings, refer to the model tech sheets on www.pulsa.com.

MATERIALS OF CONSTRUCTION

Housing	PVDF	316SS
Magnet	Neodymium encapsulated in natural ETFE	Samarium Cobalt
Liner	Carbon reinforced PTFE	Carbon reinforced PTFE
Bearings	Carbon Graphite or Graphite impregnated Silicon Carbide	Carbon Graphite, Graphite impregnated Silicon Carbide, or PTFE
O-rings	Viton®, EPDM, and Perfluoroelastomer	PTFE and Perfluoroelastomer

FLOW CURVES

E02 MODEL

Fluid Viscosity: 1 cPs, Specific Gravity 1.0

Motor 1/4 HP (.18 kW) | Pump needs 56C Frame

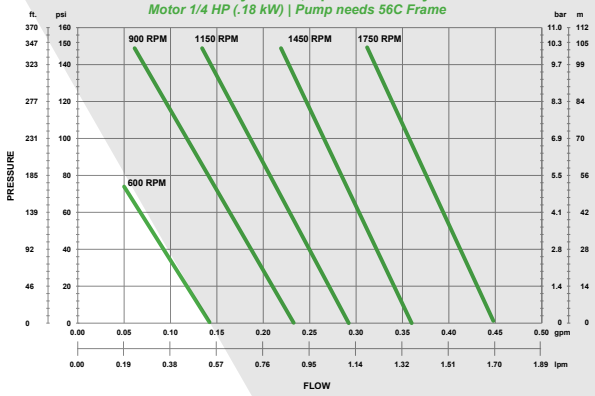

E05 MODEL

Fluid Viscosity: 1 cPs, Specific Gravity 1.0

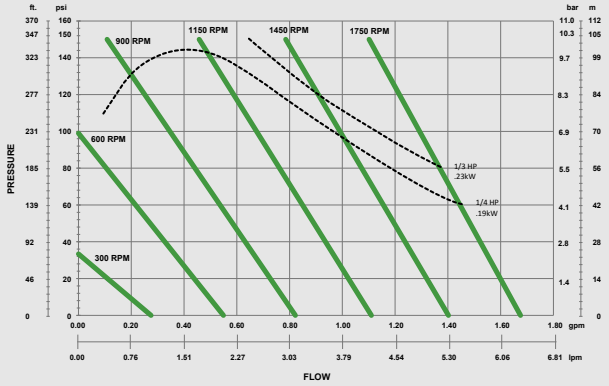

Visit www.pulsa.com/literature for full size curves

E12 MODEL

Fluid Viscosity: 1 cPs, Specific Gravity 1.0

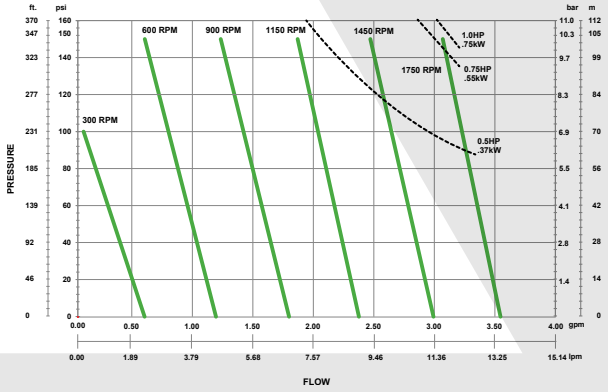

E25 MODEL

Fluid Viscosity: 1 cPs, Specific Gravity 1.0

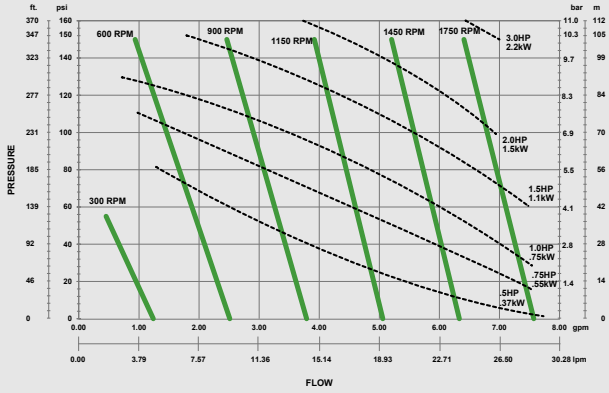

Visit www.pulsa.com/literature for full size curves

E75 MODEL

Fluid Viscosity: 1 cPs, Specific Gravity 1.0

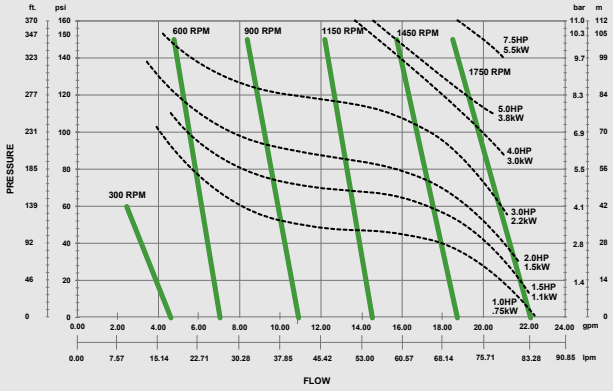

E125 MODEL

Fluid Viscosity: 1 cPs, Specific Gravity 1.0

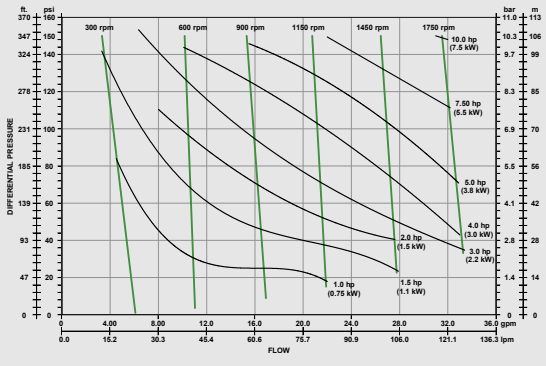

MODEL STRINGS

NON-METALLIC PUMP CONFIGURATION STRING

Pump Selection	Available Model	Code	Description	E___ _ _ _ _ - _
Positions 1, 2, 3 PUMP SIZE	E*	02	Size 02 - Max. Flow .45 gpm (1.7 lpm) 1/4"-18 FNPT / 1/4"-19 BSPT	
		05	Size 05 - Max. Flow 1.6 gpm (6.1 lpm) 3/8"-18 FNPT / 3/8"-19 BSPT	
		12	Size 12 - Max. Flow 3.5 gpm (13.2 lpm) 3/4"-14 FNPT / 3/4"-14 BSPT	
		25	Size 25 - Max. Flow 7.4 gpm (28 lpm) Flanged 1"-150# ANSI / DIN 20 / 25	
		75	Size 75 - Max. Flow 22 gpm (83.3 lpm) Flanged 1 1/2"-150# ANSI / DIN 32 / 40	
		125	Size 125 - Max. Flow 33 gpm (125 lpm) Flanged 1 1/2"-150# ANSI / DIN 32 / 40	
Position 4 BASE MATERIAL	02,05	K	PVDF / FNPT	
	02,05	M	PVDF / BSPT,	
	Export Restrictions apply to the following sizes listed below:			
	12	K	PVDF / FNPT	
	12	M	PVDF / BSPT,	
	25,75,125	N	PVDF, Flanged	
Position 5 BEARINGS	02,05,12,25,75,125	L	Carbon	
		B	Silicon Carbide	
Position 6 O-RINGS	02,05,12,25,75,125	V	Viton®	
		E	EPDM	
		K	Perfluoroelastomer	
Position 7 MOTOR MOUNTING ARRANGEMENTS	02,05,12,25,75	F	NEMA 56C (C-face, rigid base, 5/8" shaft diameter, 4x 3/8"-16 tapped holes on a 5-7/8" bolt circle)	
	02,05,12,25,75,125	O	NEMA 143/5TC-182/4C (C-face, rigid base, 7/8" shaft diameter, 4x 3/8"-16 tapped holes on a 5-7/8" bolt circle)	
	25, 75,125	R	NEMA 182TC-184TC (C-face, rigid base, 1-1/8" shaft diameter, 4x 1/2"-13 tapped holes on a 7-1/4" bolt circle)	
	75,125	W	NEMA 213TC-215TC (C-face, rigid base, 1-3/8" shaft diameter, 4x 1/2"-13 tapped holes on a 7-1/4" bolt circle)	
	02,05,12	H	IEC 63 B3/B14 (rigid base, C-face, 11 mm motor shaft diameter, 4x M5 tapped holes on a 75 mm bolt circle)	
	02,05,12	J	IEC 71 B3/B14 (rigid base, C-face, 14 mm motor shaft diameter, 4x M6 tapped holes on a 85 mm bolt circle)	
	02,05,12,25,75	K	IEC 80 B3/B14 (rigid base, C-face, 19 mm motor shaft diameter, 4x M6 tapped holes on a 100 mm bolt circle)	
	25,75	L	IEC 90 B3/B14 (rigid base, C-face, 24 mm motor shaft diameter, 4x M8 tapped holes on a 115 mm bolt circle)	
	25,75,125	P	IEC 100/112 B3/B14 (rigid base, C-face, 28 mm motor shaft diameter, 4x M8 tapped holes on a 130 mm bolt circle)	
	02,05,12,25,75,125	Y	NO MOTOR MOUNTING KIT (Pump includes Driven Magnet)	
Position 8	02,05,12,25,75,125	-	Dash	
Position 9 OPTIONS	02,05,12,25,75,125	X	Standard (Complete Pump - No Options)	
	05,12,25,75,125	A	Bearing Flush Port (1x 1/8" FNPT / BSPT Connection located in the center of the front cover)	
	02,05,12,25,75,125	N	Pump Wet End Only (Only available in conjunction with 7th position option "Y")	
	05,12,25,75,125	B	Combination Of 9th Position Options "A" AND "N"	
	02,05,12,25,75,125	X- ATEX	Standard Pump with ATEX Directive - CE Ex II 2G T6 II 2D T6	
	05,12,25,75,125	A- ATEX	Bearing Flush with ATEX Directive - CE Ex II 2G T6 II 2D T6	
	02,05,12,25,75,125	N- ATEX	Wet End Only with ATEX Directive - CE Ex II 2G T6 II 2D T6	
	05,12,25,75,125	B- ATEX	Wet End Only and Bearing Flush with ATEX Directive - CE Ex II 2G T6 II 2D T6	

Viton® are registered trademarks of E.I. du Pont de Nemours and Company.

* For Sodium Hypochlorite (NaOCl) applications ask for the pre-configured Eclipse "EH" series

METALLIC PUMP CONFIGURATION STRING

Pump Selection	Available Model	Code	Description
Positions 1, 2, 3 PUMP SIZE	E	02	Size 02 - Max. Flow .45 gpm (1.7 lpm) 1/4" FNPT / 1/4" BSPT
		05	Size 05 - Max. Flow 1.6 gpm (6.1 lpm) 1/2" FNPT / 1/2" BSPT / Flanged .50-150# ANSI / DIN10 / 15 - PN16
		12	Size 12 - Max. Flow 3.5 gpm (13.2 lpm) 1/2" FNPT / 1/2" BSPT / Flanged .50-150# ANSI / DIN10 / 15 - PN16
		25	Size 25 - Max. Flow 7.4 gpm (28 lpm) 3/4" FNPT / 3/4" BSPT / Flanged .75"-150# ANSI / DIN 20 - PN16
		75	Size 75 - Max. Flow 22 gpm (83.3 lpm) 1-1/2 FNPT / 1-1/2" BSPT / Flanged 1 1/2"-150# ANSI / DIN 32 / 40 - PN16
		125	Size 125 - Max. Flow 33 gpm (125 lpm) 1-1/2 FNPT / 1-1/2" BSPT / Flanged 1 1/2"-150# ANSI / DIN 32 / 40 - PN16
Position 4 BASE MATERIAL	02,05,12,25,75,125	A	316SS / FNPT
	02,05,12,25,75,125	G	316SS / BSPT
	05,12,25,75,125	U	316SS / Flange
Position 5 BEARINGS	02,05,12,25,75,125	L	Carbon
		B	Silicon Carbide** Silicon Carbide bearings, must select Position 9 = B (Alumina ceramic shafts)
		T	Glass Filled PTFE 110°F (43.3°C)
Position 6 O-RINGS	02,05,12,25,75,125	U	PTFE
		K	Perfluoroelastomer (recommended for fluctuating temperature applications)
Position 7 MOTOR FRAME MOUNTING	02,05,12,25	F	NEMA 56C (C-face, rigid base, 5/8" shaft diameter, 4x 3/8"-16 tapped holes on a 5-7/8" bolt circle)
	05,12,25,75,125	O	NEMA 143/5TC (C-face, rigid base, 7/8" shaft diameter, 4x 3/8"-16 tapped holes on a 5-7/8" bolt circle)
	02	H	IEC 63 B3/B14 (C-face, rigid base, 11 mm motor shaft diameter, 4x M5 tapped holes on a 75 mm bolt circle)
	02,05,12	J	IEC 71 B3/B14 (C-face, rigid base, 14 mm motor shaft diameter, 4x M6 tapped holes on a 85 mm bolt circle)
	05,12,25	K	IEC 80 B3/B14 (C-face, rigid base, 19 mm motor shaft diameter, 4x M6 tapped holes on a 100 mm bolt circle)
	25	L	IEC 90 B3/B14 (C-face, rigid base, 24 mm motor shaft diameter, 4x M8 tapped holes on a 115 mm bolt circle)
	25,75,125	S	NEMA 182/4TC (C-face, rigid base, 1.125" shaft diameter, 4x 1/2"-13 tapped holes on a 7-1/4" bolt circle)
	75,125	R	NEMA - Pedestal with 1.125" shaft diameter (182-184T or 213-215)
	75,125	U	IEC - Pedestal with 28mm shaft diameter (100/112, B3)
	75,125	W	NEMA 213/215TC (C-face, rigid base, 1.375" shaft diameter, 4x 1/2"-13 tapped holes on a 7-1/4" bolt circle)
Position 8	02,05,12,25,75,125	-	Dash
Position 9 SHAFT /GEAR / MAGNET OPTIONS	02,05,12,25,75,125	S	316SS / PTFE / 316SS / PTFE / STANDARD MAGNET MATERIAL: E02,E75,E125 / E05,E12,E25 / MAGNET* Max. Temp. 200°F (93°C)
		F	316SS / 316SS / 316SS / PTFE / Samarium Cobalt / Neodymium / 200°F (93°C)
		B	ALUMINA / PTFE / ALUMINA / PTFE / 200°F (93°C)
		V	316SS / 316SS / 316SS / 316SS / NOT AVAILABLE / Neodymium / 300°F (149°C)
		T	316SS / 316SS / 316SS / PEEK / Samarium Cobalt / Samarium Cobalt / 300°F (149°C)
		H	316SS / 316SS / 316SS / 316SS / Samarium Cobalt / Samarium Cobalt / 300°F (149°C)
Position 10 OPTIONS	02,05,12,25,75,125	N	WET END ONLY (Requires 7th position code identifying motor frame mounting)

All pumps include ATEX Directive - CE Ex II 2G TX II 2D TX

* **FLUID Max. Temp.** is as shown on individual catalog pages

PULSAFEEDER®
GENUINE PARTS





KOPKIT® (KEEP ON PUMPING KIT)

- Designed to guard against unnecessary downtime and assure the highest level of efficient and uninterrupted service from your pump.
- In the event of a breakdown, KOPkit® will put you back in business fast!



BACK PRESSURE VALVES

- Particularly useful in metering applications or other low-flow systems
- Prevents mainstream pressure surges and siphoning



PRESSURE GAUGES

- Relied on to measure pressure in the system. Proper pressure is necessary to ensure flow.
- Accurate and reliable.



PRESSURE RELIEF VALVES

- Prevent an over pressurization situation from damaging your pump or system.



Y-STRAINERS

- Capture out debris in pipelines, protecting equipment and processes.
- Prevent premature wear of the rotating components within a pump.

PULSAFEEDER®

Pulsafeeder, Inc.
2883 Brighton Henrietta Town Line Rd
Rochester, NY 14623
Phone: +1 (585) 292-8000
pulsa@idexcorp.com
pulsafeeder.com

VISIT OUR DISTRIBUTOR LOOKUP

IDEX

© Copyright 2024 Pulsafeeder. All Rights Reserved.