CALL TOLL FREE 877-742-2878 FOR SALES AND SUPPORT
Return to BurtProcess.com

FLOMAX 5

1-1/2" x 1-1/2" Self Priming Centrifugal Pump

FLOMAX® 5 self priming centrifugal pumps are capable of creating vacuum sufficient to lift liquids from heights up to 25 feet above the source. Once primed, the pump's built in flapper valve will maintain a full column of liquid in the suction line.

A FLOMAX® PumPAK® is a fully assembled and run tested pump end that can be easily coupled to a number of drivers such as hydraulic motors, 56C and 145TC frame motors and gas engines. A bearing pedestal is also available for T-frame motor or belt drive.

Standard features include stainless steel drive sleeve, stainless steel fasteners, renewable wear plate, and a semi-open dynamically balanced impeller.

The FLOMAX® series of pumps are commonly used in Industrial, OEM, Agricultural and Marine applications, such as: Bilge Pumps, Auxiliary Fire Pumps, Ballast Transfer Pumps, Washdown Pumps, Fertilizer and Pesticide Pumps, Applicators & Sprayers, Blending Pumps, Nurse Tanks, Bulk Transfer Pumps and much more.

ABS Type Approval for the Flomax 5 and 8 - Download PDF



Application

- Agricultural
- Industrial
- Marine
- OEM

Features

- Renewable wear plate
- Stainless steel drive sleeve
- Stainless steel fasteners
- Up to a 25' suction lift

SPECIFICATIONS:

Suction And Discharge	1-1/2" x 1-1/2" NPT
Materials Of Construction	Aluminum, Bronze, Cast iron
Flow	Up to 145 GPM
Head Feet	UP to 100'
Impeller	5.0" max. diameter, semi-open
Motor	Up to 3 HP
Drive Options	Close coupled 56C, Engine mount 5.5 HP, Engine mount 6.5 HP, Close coupled 145TC, Pedestal, PumPAK® (without motor)
Seal	Special seal material combinations available (consult factory), Standard carbon / ceramic / Viton
Options	5 blade impeller available for higher flows, Base plate shown above is optional, Double seal available for dry run applications, Hydraulic motor .22 cu. in., Hydraulic motor .37 cu. in., Hydraulic motor .45 cu. in., Stainless steel impeller

FLOMAX 5

Max Solid Size	.56"

34800 BENNETT - FRASER, MI 48026-1686
(586) 293-8240 - FAX (586) 293-8469
(800) 563-8006 - www.mppumps.com

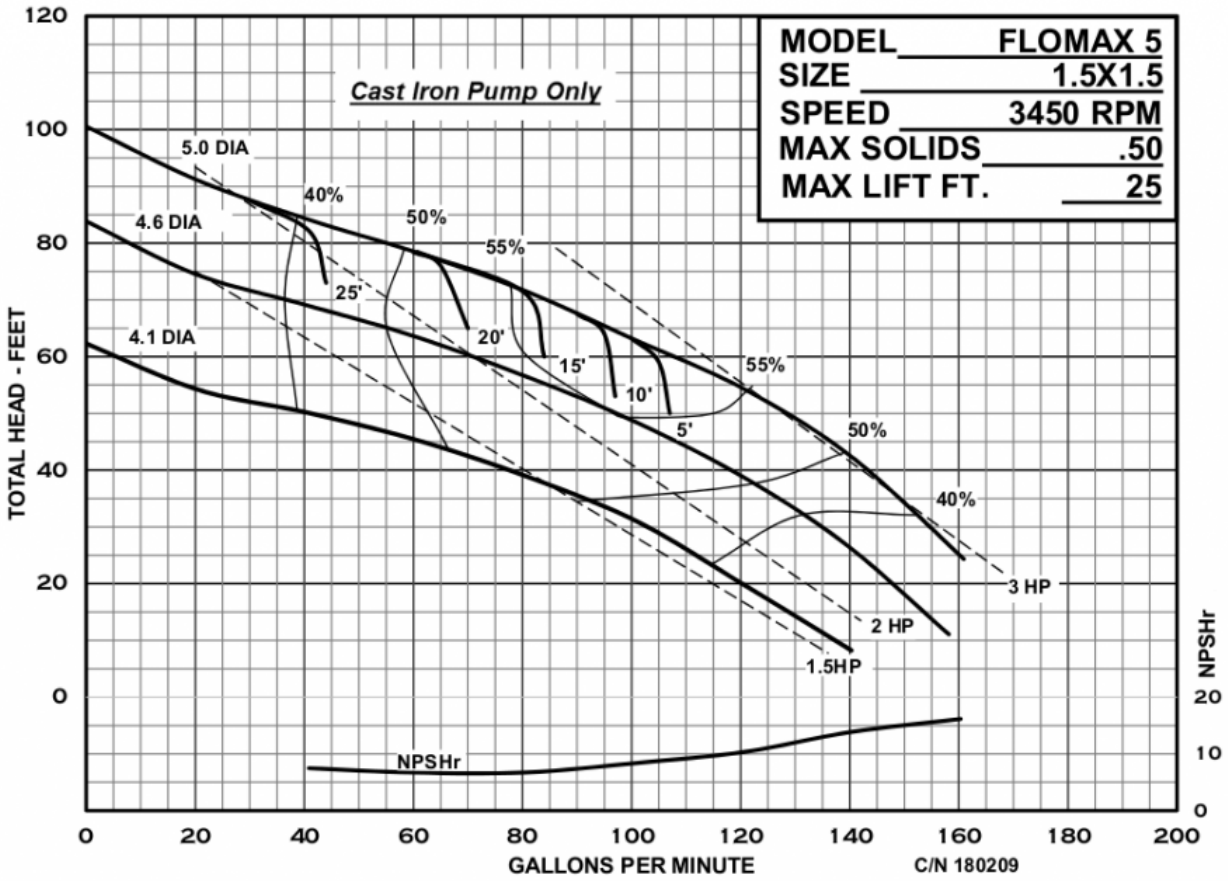

34800 BENNETT - FRASER, MI 48026-1686
(586) 293-8240 - FAX (586) 293-8469
(800) 563-8006 - www.mppumps.com

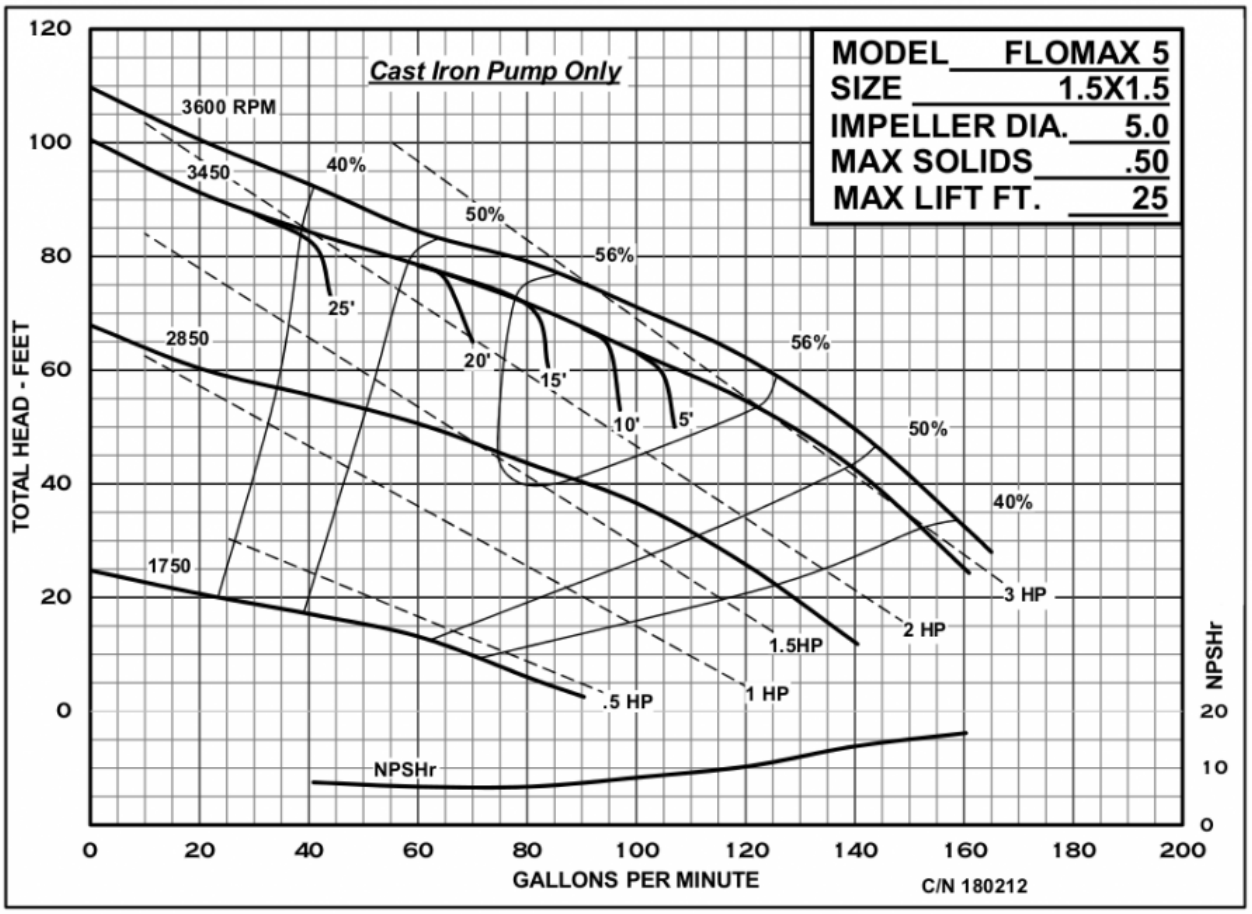

34800 BENNETT - FRASER, MI 48026-1686
(586) 293-8240 - FAX (586) 293-8469
(800) 563-8006 - www.mppumps.com

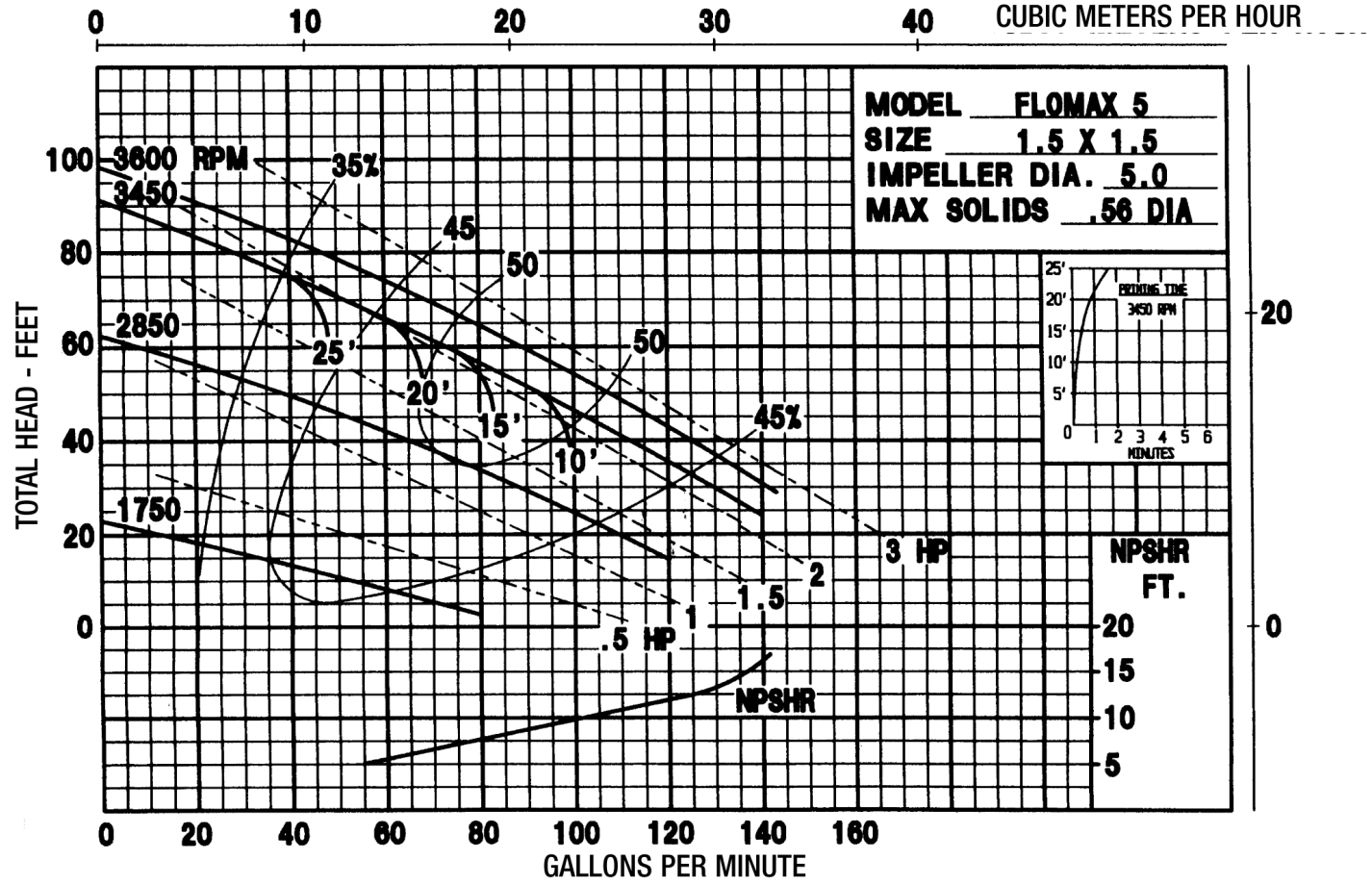

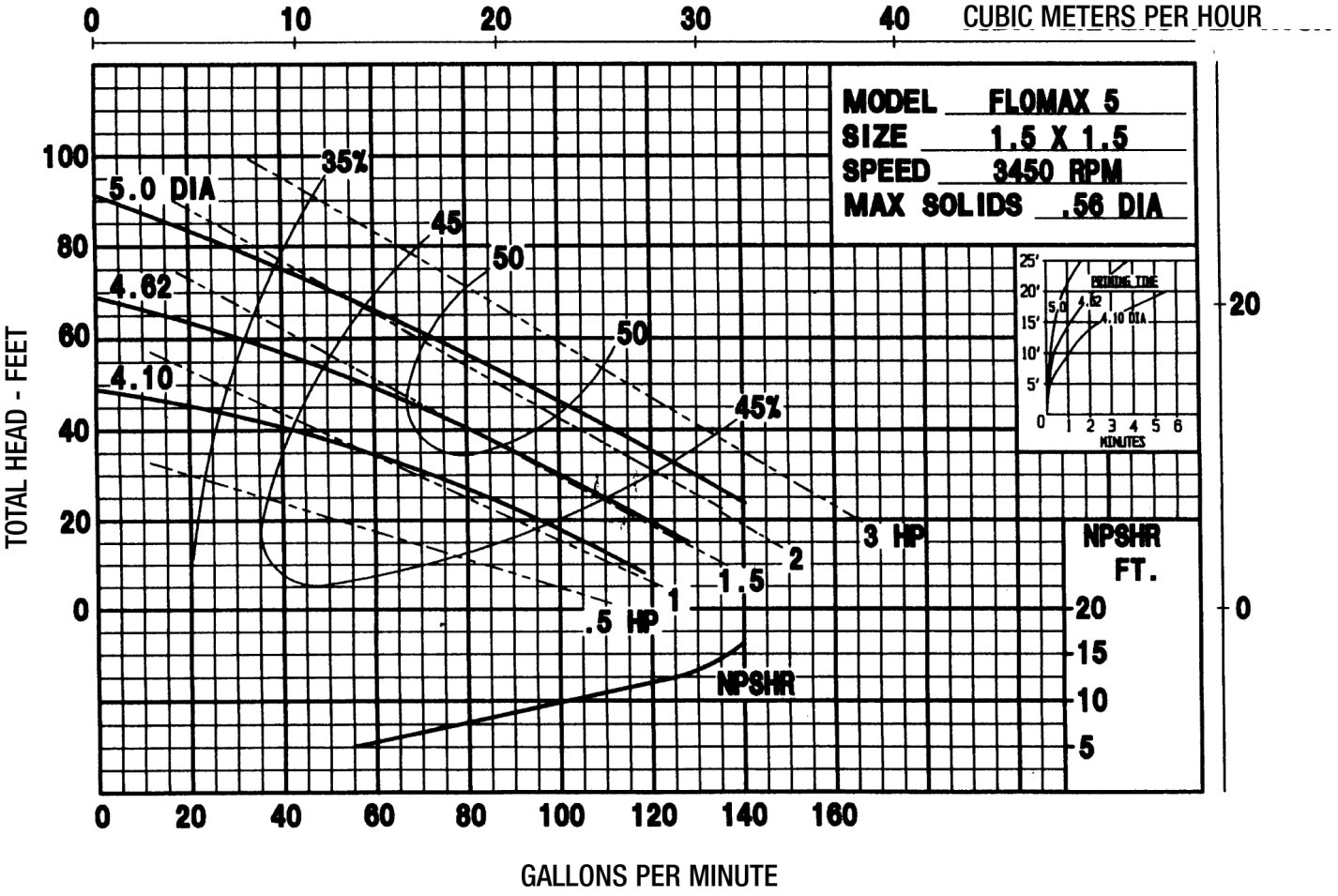

34800 BENNETT - FRASER, MI 48026-1686
(586) 293-8240 - FAX (586) 293-8469
(800) 563-8006 - www.mppumps.com

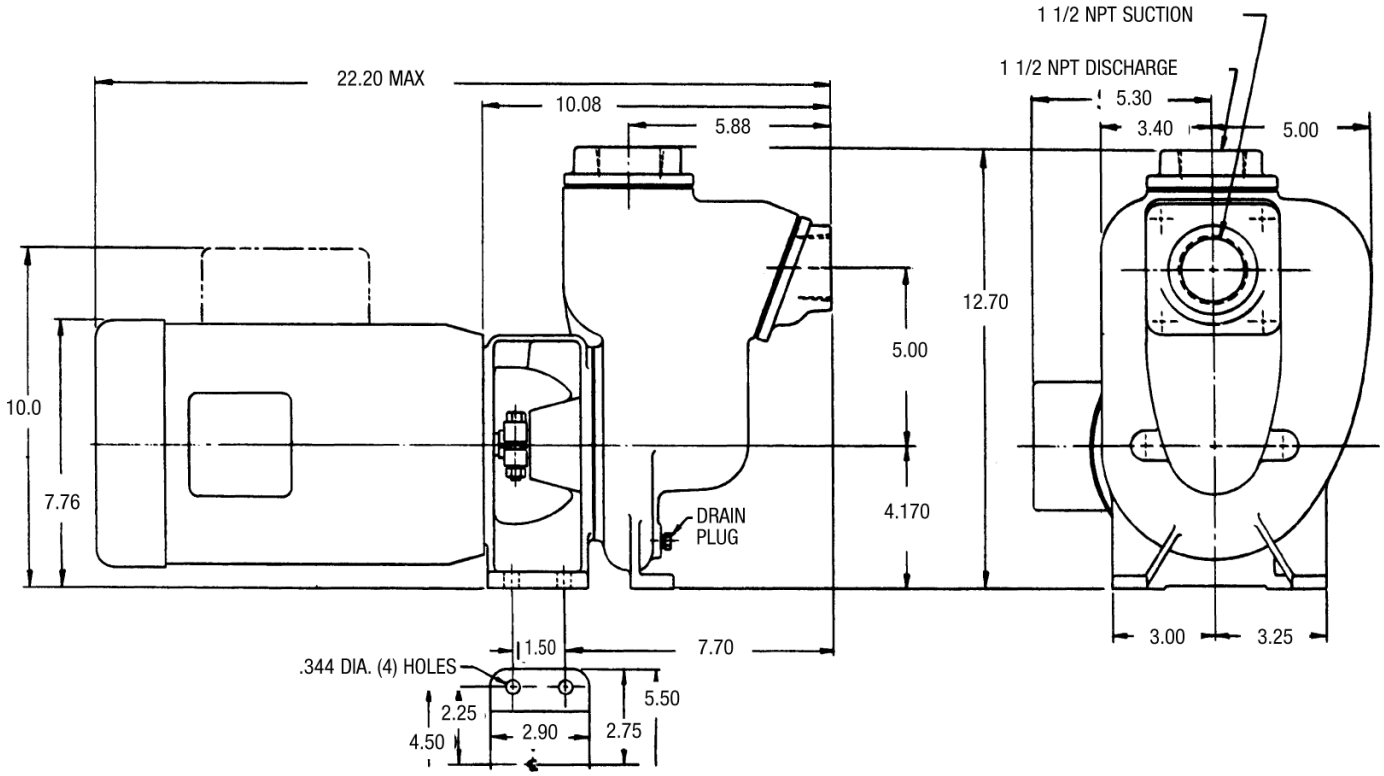

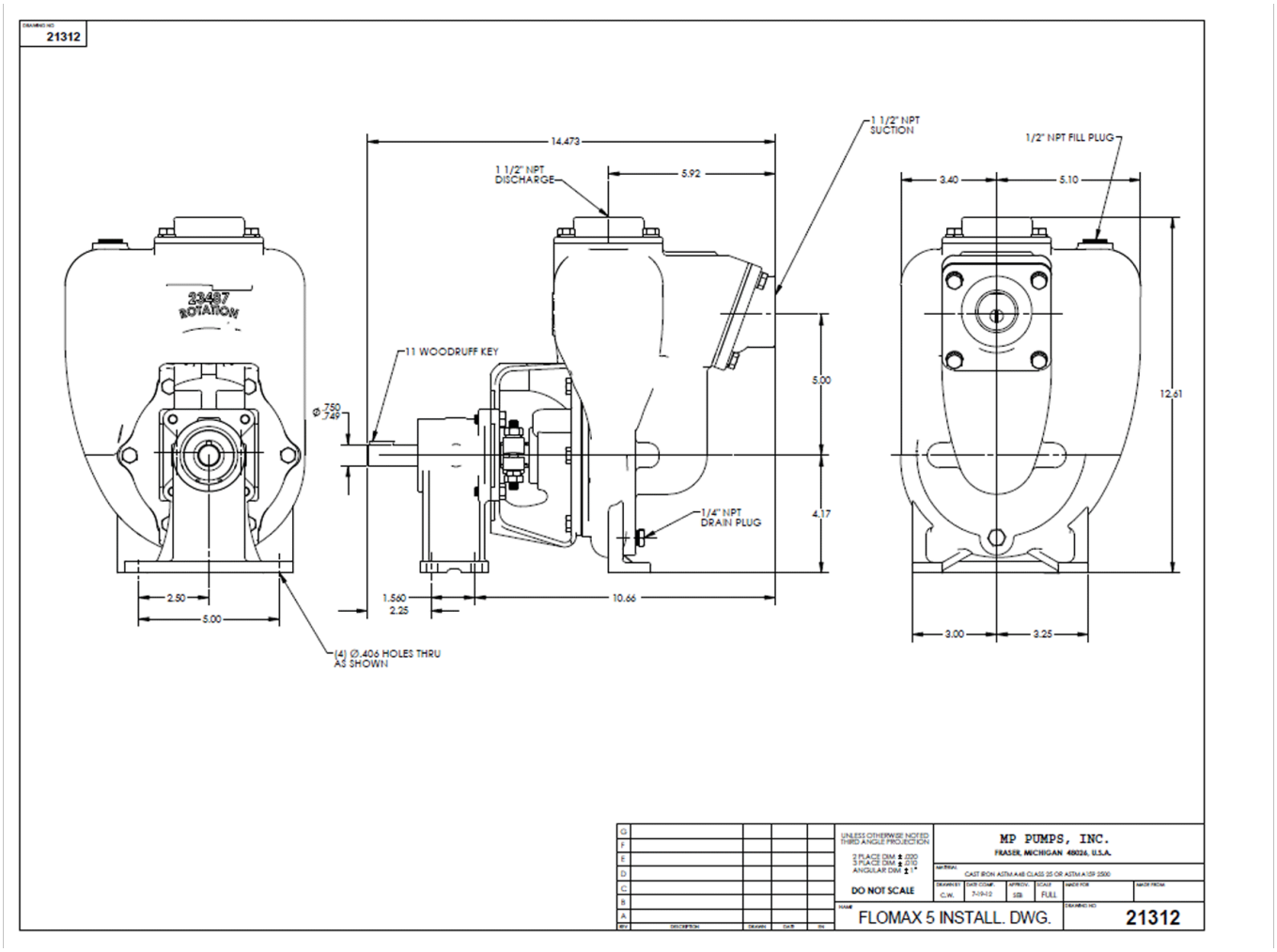

34800 BENNETT - FRASER, MI 48026-1686
(586) 293-8240 - FAX (586) 293-8469
(800) 563-8006 - www.mppumps.com

21312

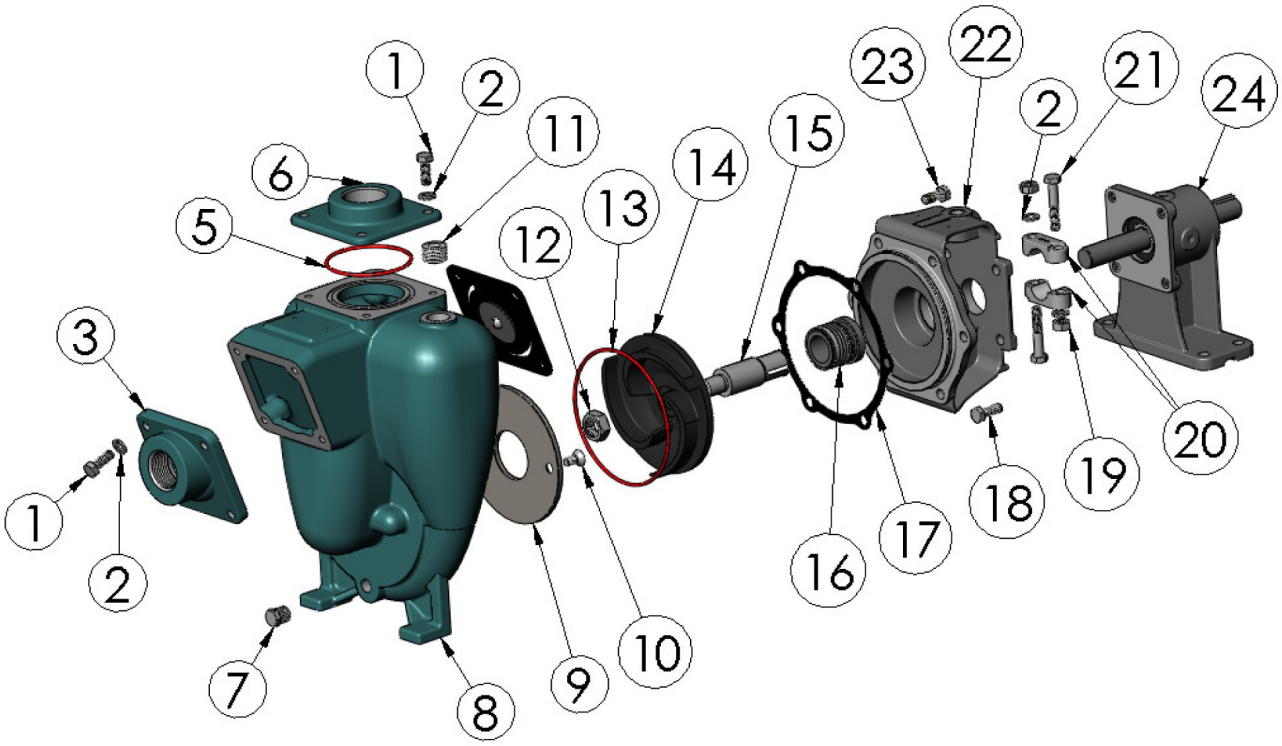

ITEM NO.	PART NO.	DESCRIPTION	QTY.		ITEM NO.	PART NO.	DESCRIPTION	QTY.
1	21242	CAPSCREW - 5/16"-18 X 7/8"	8	*	13	34555	O RING - VITON	1
2	21238	LOCKWASHER 5/16	14		14	22293	IMPELLER	1
3	22263	SUCTION FLANGE- 1 1/2" NPT	1		15	22286	DRIVE SLEEVE SS - 3/4	1
* 4	23022	FLAPPER ASY- BUNA	1	*	16	22272	SEAL ASSY - VITON	1
* 5	37141	O RING - VITON	1	*	17	22255	GASKET	1
6	22266	DISCHARGE FLANGE- 1 1/2" NP	1		18	21278	CAPSCREW- 5/16"-24 X .88	4
7	41475	PIPE PLUG- 1/4" NPT	1		19	21284	HEX NUT- 5/16"-18	2
8	22251	HOUSING C	1		20	21946	CLAMP- 3/4 SL	2
* 9	22260	WEAR PLATE C.I.	1		21	21264	CAPSCREW- 5/16"-18 X 1 3/4"	2
10	37131	FLAT HD. SCREW S.S.	2		22	22247	ADAPTOR	1
11	37140	FILL PLUG ZPS - 1/2 NPT	1		23	24965	CAPSCREW- 5/16"-18 X 3/4"	6
12	22655	JAM NUT- 5/8"-18	1		24	26141	PEDESTAL ASY C.I. - H. DUTY	1

* SUGGESTED REPLACEMENT PARTS

34800 BENNETT - FRASER, MI 48026-1686
(586) 293-8240 - FAX (586) 293-8469
(800) 563-8006 - www.mppumps.com

MP PUMPS SERVICE PARTS LIST

- Self Priming
- Pumpak
- Electric Motor Drive
- Close Coupled

Flomax 5 1½" x 1½" Pipe Size
Flomax 8 2" x 2" Pipe Size

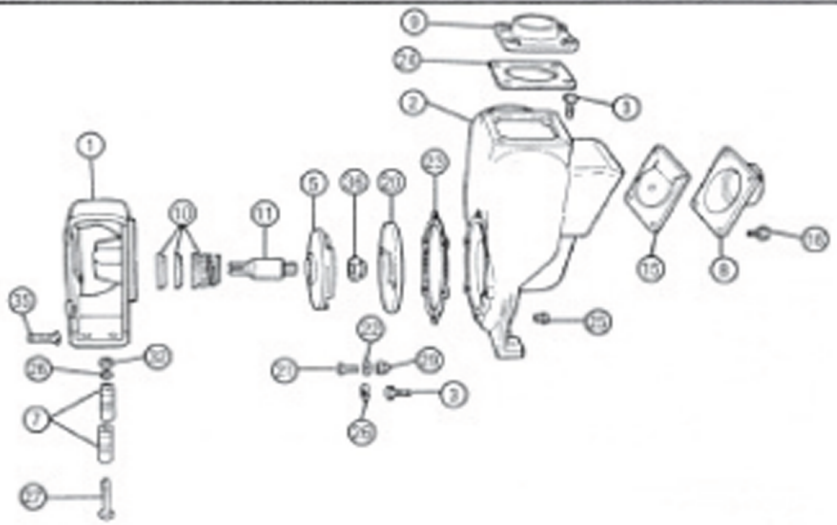

IMPORTANT: Read special instructions for item 10.
When ordering parts, specify model and serial number shown on nameplate.
N/S means not shown in exploded view of parts.

ITEM NO.	PART NO.	DESCRIPTION	QUANTITY REQUIRED PER MODEL					
		METAL	CAST IRON		ALUMINUM		BRONZE	
		FLOMAX	5	8	5	8	5	8
		MODEL NO.						
		7/8" sleeve	26074	25922	26262	26066	26268	26066
		5/8" sleeve	25979	26079	26260	26264	26223	25984
HOUSING								
	23021	Housing Assembly Cast Iron — Incl.:	1	1				
2		Housing — Cast Iron	1	1				
3	24965	Capscrew — S.S — 5/16" x 3/4"	6	6				
25	21267	Pipe Plug — 1/4"	1	1				
	32019	Housing Assembly R.H. Aluminum Inc.:			1	1		
2		Housing — Aluminum			1	1		
3	24965	Capscrew — S.S — 5/16" x 3/4"			6	6		
25	21267	Pipe Plug — 1/4"			1	1		
	23020	Housing Assembly					1	1
2		Housing — Bronze					1	1
3	24965	Capscrew — S.S — 5/16" x 3/4"					6	6
25	21267	Pipe Plug — 1/4"					1	1
16	21242	Capscrew — S.S. — 5/16" — Flanges	8	8	8	8	8	8
26	21238	Lockwasher — S.S. — 5/16" Housing to Suction — 4 Housing to Discharge — 4	8	8	8	8	8	8
15	23022	Flapper Assembly	1	1	1	1	1	1
23	22255	Gasket — Housing to Adapter	1	1	1	1	1	1
24	22256	Gasket — Outer to Housing	1	1	1	1	1	1
FLANGES								
8	22263	Flange — Inlet — Cast Iron — 1-1/2"	1					
8	22387	Flange — Inlet — Cast Iron — 2"		1				
8	22261	Flange — Inlet — Aluminum — 1-1/2"			1			
8	22385	Flange — Inlet — Aluminum — 2"				1		
8	22262	Flange — Inlet — Bronze — 1-1/2"					1	

MP PUMPS, INC.
34800 BENNETT • FRASER, MI 48026-1686
(586) 293-8240 • FAX (586) 293-8469
(800) 563-8006 • www.mppumps.com

FORM 7052-F
PRINTED IN U.S.A. (8-97)

ITEM NO.	PART NO.	DESCRIPTION	METAL	CAST IRON		ALUMINUM		BRONZE	
			FLOMAX	5	8	5	8	5	8
			MODEL NO.						
			7/8" sleeve	26074	25922	26262	26066	26268	26066
			5/8" sleeve	25979	26079	26260	26264	26223	25984
FLANGES - Continued									
8	22386	Flange — Inlet — Bronze — 2"							1
9	22266	Flange — Outlet — Cast Iron — 1-1/2"		1					
9	22311	Flange — Outlet — Cast Iron — 2"			1				
9	22264	Flange — Outlet — Aluminum — 1-1/2"				1			
9	22309	Flange — Outlet — Aluminum — 2"					1		
9	22265	Flange — Outlet — Bronze — 1-1/2"						1	
9	22310	Flange — Outlet — Bronze — 2"							1
IMPELLER									
5	22293	Impeller — Cast Iron — 5.0" Dia.		1	1				
5	24585	Impeller — Cast Iron — 4.6" Dia.							
5	25139	Impeller — Cast Iron — 4.1" Dia.							
5	22294	Impeller — Stainless Steel — (Optional)		1	1	1	1	1	1
5	22291	Impeller — Aluminum — 5.0" Dia..				1	1		
5	22292	Impeller — Bronze — 5.0" Dia.						1	1
36	22655	Impeller — Lock Nut — S.S. — 5"		1	1	1	1	1	1
11	22253	Drive Sleeve — S.S. 5/8" Bore For NEMA 56C		1	1	1	1	1	1
11	25664	Drive Sleeve — S.S. 7/8" Bore For NEMA 184C — 145TC — 143TC		1	1	1	1	1	1
CLAMP									
	23002	Clamp Assembly, for 5/8" sleeve — 56C frame — Incl.:		1	1	1	1	1	1
7		Clamp		2	2	2	2	2	2
27	21264	Capscrew — S.S. — 5/16"		2	2	2	2	2	2
32	21284	Hex Nut — S.S. — 5/16"		2	2	2	2	2	2
26	21238	Lockwasher — S.S. — 5/16"		2	2	2	2	2	2
	23003	Clamp Assembly — 7/8" sleeve — 18C — 145TC — 143TC		1	1	1	1	1	1
7		Clamp		2	2	2	2	2	2
27	21264	Capscrew — S.S. — 5/16"		2	2	2	2	2	2
32	21284	Hex Nut — S.S. — 5/16"		2	2	2	2	2	2
26	21238	Lockwasher — S.S. — 5/16"		2	2	2	2	2	2
WEAR PLATE									
	23024	Wear Plate Assembly — Steel — Incl.:		1	1				
20		Wear Plate — Steel		1	1				
21	21249	Flat Head Screw — S.S. — 5/16"		2	2				
22	21248	Annular Gasket — 1/2"		2	2				
	22270	Wear Plate Assembly — Aluminum — Incl.:				1	1		
20		Wear Plate — Aluminum				1	1		
21	21249	Flat Head Screw — S.S. — 5/16"				2	2		
22	21248	Annular Gasket — 1/2"				2	2		
	22271	Wear Plate Assembly — Bronze — Incl.:						1	1
20		Wear Plate — Bronze						1	1
21	21249	Flat Head Screw — S.S. — 5/16"						2	2
22	21248	Annular Gasket — 1/2"						2	2
29	21237	Acorn Nut — S.S. — 5/16"		2	2	2	2	2	2
SEAL									
Be sure you specify whether you want the self-lubricated seal or the grease-lubricated seal.									
10	22272	Seal Assembly — Self-lubricated — Incl.:		1	1	1	1	1	1
*10	22290	Seal Assembly — Grease Lubricated		1	1	1	1	1	1
	22313	Grease Cup N/S		1	1	1	1	1	1
ADAPTOR									
1	25904	Adaptor — Cast Iron		1	1				
1	25946	Adaptor — Aluminum				1	1		
1	25948	Adaptor — Bronze						1	1
1	26181	Adaptor — Cast Iron — Grease Seal Assembly		1		1			
35	21251	Capscrew 5/16" — Adaptor To Motor		4	4	4	4	4	4
N/S	21238	Lockwasher 5/16" — Adaptor Motor		4	4	4	4	4	4

*Optional for special applications.

MP PUMPS, INC.
34800 BENNETT • FRASER, MI 48026-1686
(586) 293-8240 • FAX (586) 293-8469
(800) 563-8006 • www.mppumps.com

FORM 7052-F
PRINTED IN U.S.A. (8-97)