# SERVICE & OPERATING MANUAL
**Original Instructions**

G SERIES



## Certified Quality

ISO 9001 Certified
ISO 14001 Certified

Certified to CSA Technical Letter No, R-14

Certified to ANSI LC6-2008

Warren Rupp, Inc.
A Unit of IDEX Corporation
800 N. Main St.,
Mansfield, Ohio 44902 USA
Telephone 419.524.8388
Fax 419.522.7867
SANDPIPERPUMP.COM

# Model G1F
## Metallic
## Design Level 1
### Natural Gas-Operated
### Diaphragm Pumps

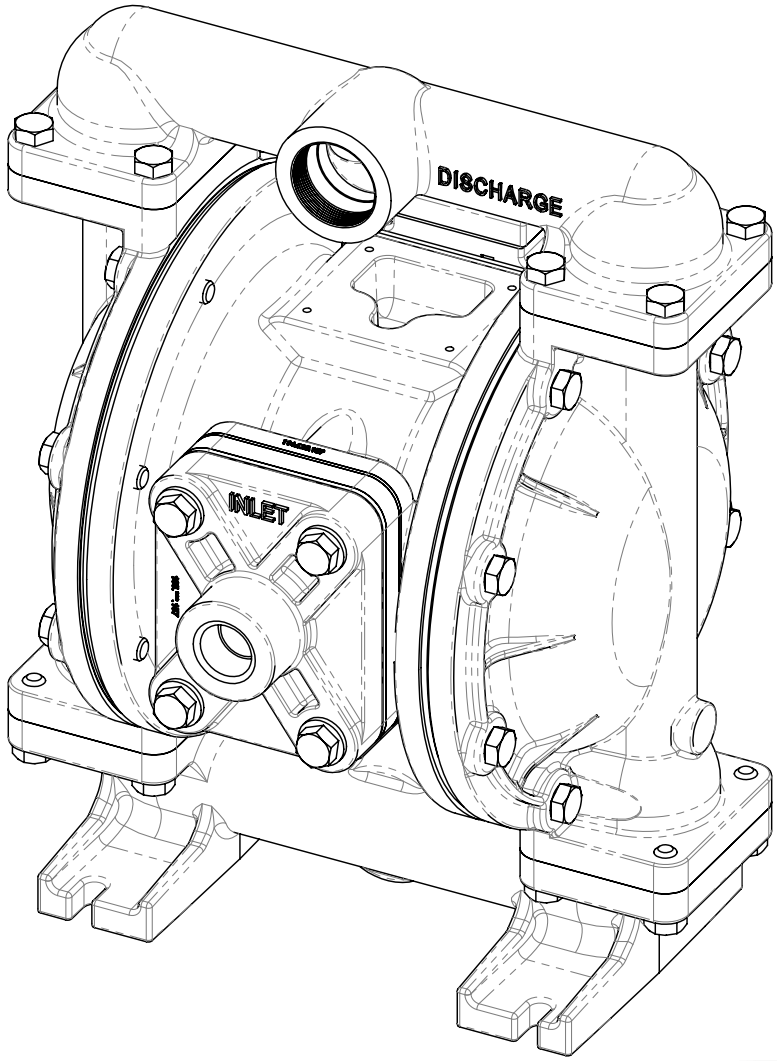


© Copyright 2022 Warren Rupp, Inc.
All rights reserved

SANDPIPER®
A WARREN RUPP, INC. BRAND
SANDPIPERPUMP.COM

# Safety Information

## ⚠ IMPORTANT



*Read the safety warnings and instructions in this manual before pump installation and start-up. Failure to comply with the recommendations stated in this manual could damage the pump and void factory warranty.*



*When the pump is used for materials that tend to settle out or solidify, the pump should be flushed after each use to prevent damage. In freezing temperatures the pump should be completely drained between uses.*

## ⚠ CAUTION



*Before pump operation, inspect all fasteners for loosening caused by gasket creep. Retighten loose fasteners to prevent leakage. Follow recommended torques stated in this manual.*



*Nonmetallic pumps and plastic components are not UV stabilized. Ultraviolet radiation can damage these parts and negatively affect material properties. Do not expose to UV light for extended periods of time.*



***WARNING***
*The use of non-OEM replacement parts will void (or negate) agency certifications, including CE, ATEX, CSA, 3A and EC1935 compliance (Food Contact Materials). Warren Rupp, Inc. cannot ensure nor warrant non-OEM parts to meet the stringent requirements of the certifying agencies.*

## ⚠ WARNING



*When used for toxic or aggressive fluids, the pump should always be flushed clean prior to disassembly.*



*Before maintenance or repair, shut off the compressed gas line, bleed the pressure, and disconnect the gas line from the pump. Be certain that approved eye protection and protective clothing are worn at all times. Failure to follow these recommendations may result in serious injury or death.*



*Airborne particles and loud noise hazards. Wear eye and ear protection.*



*In the event of diaphragm rupture, pumped material may enter the air end of the pump, and be discharged into the atmosphere. If pumping a product that is hazardous or toxic, the air exhaust must be piped to an appropriate area for safe containment.*



*Take action to prevent static sparking. Fire or explosion can result, especially when handling flammable liquids. The pump, piping, valves, containers and other miscellaneous equipment must be properly grounded.*



*This pump is pressurized internally with gas pressure during operation. Make certain that all fasteners are in good condition and are reinstalled properly during reassembly.*



*Use safe practices when lifting*

# ATEX Pumps - Conditions For Safe Use

1. Ambient temperature range is as specified in tables 1 to 3 on the next page *(per Annex I of DEKRA 18ATEX0094X)*

2. ATEX compliant pumps are suitable for use in explosive atmospheres when the equipment is properly grounded in accordance with local electrical codes

3. **Non-Metallic ATEX Pumps only — See Explanation of Pump Nomenclature / ATEX Details Page**
   Conductive Polypropylene, conductive Acetal or conductive PVDF pumps are not to be installed in applications where the pumps may be subjected to oil, greases and hydraulic liquids.

4. The optionally provided solenoids shall be protected by a fuse corresponding to its rated current (max 3*Irat according to EN 60127) or by a motor protecting switch with short circuit and thermal instantaneous tripping (set to the rated current) as short circuit protection. For solenoids with a very low rated current, a fuse with the lowest current value according to the indicated standard will be sufficient. The fuse may be accommodated in the associated supply unit or shall be separately arranged. The rated voltage of the fuse shall be equal or greater than the stated rated voltage of the solenoid. The breaking capacity of the fuse shall be as high as or higher than the maximum expected short circuit current at the location of the installation (usually 1500 A). The maximum permissible ripple is 20% for all dc solenoids.
   ***Not applicable for all pump models — See Explanation of Pump Nomenclature / ATEX Details Page**

5. When operating pumps equipped with non-conductive diaphragms that exceed the maximum permissible projected area, as defined in EN ISO 80079-36 : 2016 section 6.7.5 table 8, the following protection methods must be applied
   - Equipment is always used to transfer electrically conductive fluids or
   - Explosive environment is prevented from entering the internal portions of the pump, i.e. dry running.

6. Pumps provided with the pulse output kit and used in the potentially explosive atmosphere caused by the presence of the combustible dust shall be installed in such a way that the pulse output kit is protected against impact
   ***Not applicable for all pump models — See Explanation of Pump Nomenclature / ATEX Details Page**

# Temperature Tables

### Table 1. Category 1 & Category 2 ATEX Rated Pumps

| Ambient Temperature Range [°C] | Process Temperature Range [°C][1] | Temperature Class | Maximum Surface Temperature [°C] |
|---|---|---|---|
| -20°C to +60°C | -20°C to +80°C | T5 | T100°C |
| | -20°C to +108°C | T4 | T135°C |
| | -20°C to + 160°C | T3 | T200°C |
| | -20°C to +177°C | (225°C) T2 | |

[1]Per CSA standards ANSI LC6-2018 US & Canadian Technical Letter R14, G-Series Natural Gas Models are restricted to (-20°C to + 80°C) process temperature

### Table 2. Category 2 ATEX Rated Pumps Equipped with Pulse Output Kit or Integral Solenoid:

| Ambient Temperature Range [°C] | Process Temperature Range [°C] | Temperature Class | Maximum Surface Temperature [°C] | Options | |
|---|---|---|---|---|---|
| | | | | Pulse Output Kit | Integral Solenoid |
| -20°C to +60°C | -20°C to +100°C | T5 | T100 | X | |
| -20°C to +50°C | -20°C to +100°C | T5 | T100 | | X |

[2]ATEX Pulse output or Intergral Solenoid Not Available For All Pump Models See Explanation of Pump Nomenclature / ATEX Details Page

### Table 3. Category M1 ATEX Rated Pumps for Mining

| Ambient Temperature Range [°C] | Process Temperature Range [°C] |
|---|---|
| -20°C to +60°C | -20°C to +150°C |

Note: The ambient temperature range and the process temperature range should not exceed the operating temperature range of the applied non-metallic parts as listed in the manuals of the pumps.

# Table of Contents



**SECTION 1: PUMP SPECIFICATIONS.....1**
- Explanation of Nomenclature
- Performance
- Materials
- Dimensional Drawings

**SECTION 2: INSTALLATION & OPERATION ...5**
- Principle of Pump Operation
- Recommended Installation Guide
- Troubleshooting Guide

**SECTION 3: EXPLODED VIEW.....8**
- Composite Repair Parts Drawing
- Composite Repair Parts List
- Material Codes

**SECTION 4: GAS END.....11**
- Aluminum Gas Valve Assembly
- Stainless Steel Gas Valve Assembly
- Pilot Valve Assembly
- Intermediate Assembly

**SECTION 5: WET END.....14**
- Diaphragm Drawings
- Diaphragm Servicing
- Pumping Hazardous Liquids

**SECTION 7: WARRANTY & CERTIFICATES ..17**
- Warranty
- CE Declaration of Conformity - Machinery
- ATEX Declaration of Conformity

# Explanation of Pump Nomenclature

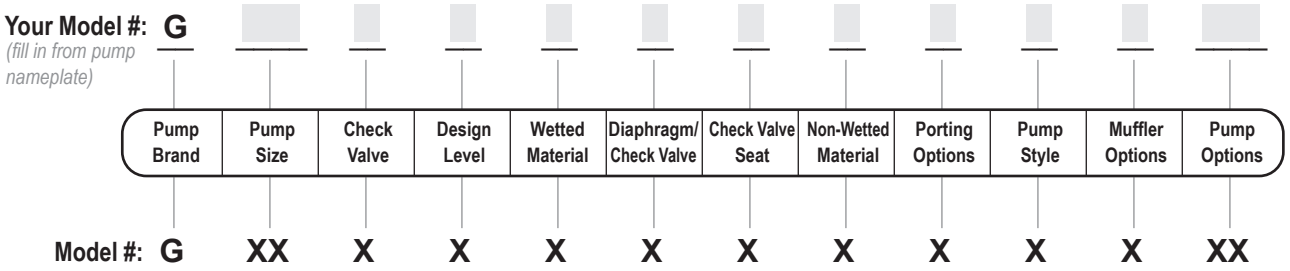


**Pump Brand**
**G** Natural Gas Operated

**Pump Size**
**1F** 1"

**Check Valve Type**
**B** Ball

**Design Level**
**1** Design Level

**Wetted Material**
**S** Stainless Steel
**A** Aluminum

**Diaphragm/Check Valve Materials**
**B** Nitrile/Nitrile
**C** FKM/PTFE
**T** PTFE -Nitrile/PTFE
**5** Nitrile/PTFE

**Check Valve Seat**
**T** Virgin PTFE
**A** Aluminum
**S** Stainless Steel

**Non-Wetted Material Options**
**A** Painted Aluminum
**B** Unpainted Aluminum with Stainless Steel Gas Valve
**D** Unpainted Aluminum with Stainless Steel Gas Valve with FKM O-rings
**X** Unpainted Aluminum
**0** Unpainted Aluminum/FKM Elastomer
**V** Painted Aluminum/ FKM Elastomer

**Porting Options**
**N** NPT Threads
**B** BSP (Tapered) Threads
**U** Universal Flange (Fits ANSI & DIN)
**R** Raised Face 150# Threaded ANSI Flange
**W** Welded Raised Face #150 ANSI Flanged Manifolds

**Pump Style**
**S** Standard

**Muffler Options**
**X** No Muffler Permitted *

**Your Serial #:** *(fill in from pump nameplate)* _____

# ATEX Detail

(1) II 2 G Ex h IIC T5...225°C (T2) Gb
II 2 D Ex h IIIC T100°C...T200°C Db

# Performance

## G1F Metallic

**SUCTION/DISCHARGE PORT SIZE**
• 1"

**CAPACITY**
• 0 to 45 gallons per minute
(0 to 170 liters per minute)

**GAS VALVE**
• No-lube, no-stall design

**SOLIDS-HANDLING**
• Up to .25 in. (6mm)

**HEADS UP TO**
• 100 psi or 231 ft. of water
(7 bar or 70 meters)

**MAXIMUM OPERATING PRESSURE**
• 100 psi (7 bar)

**DISPLACEMENT/STROKE**
• .11 Gallon / .42 liter

**SHIPPING WEIGHT**
• Aluminum 28 lbs. (13kg)
• Stainless Steel 43 lbs. (20kg)

These pump models are designed to pump the following fluids: Crude Oil, Salt Water, Drilling Mud, Condensate, Lubrication Oils, Glycol, Caustic Liquids, and Acids."

Performance based on the following: elastomer fitted pump, flooded suction, water at ambient conditions.
The use of other materials and varying hydraulic conditions may result in deviations in excess of 5%.

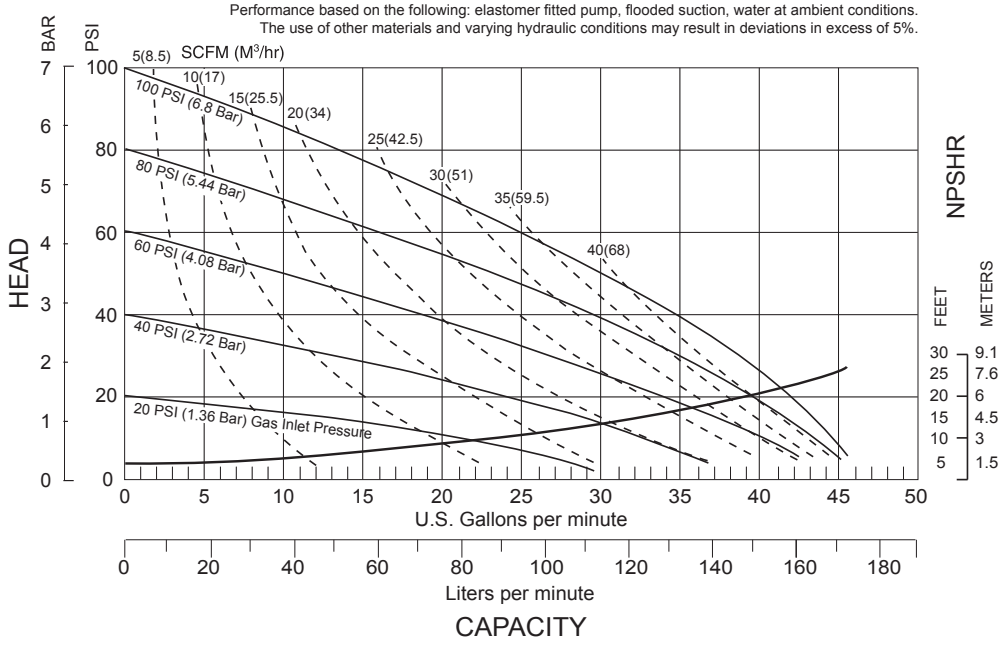


**Exhaust Gas:** The exhausted natural gas must be vented to a low pressure safe location in accordance with local fire safety and environmental codes, or in the absence of local codes, an industry or nationally recognized code having jurisdiction over the specific installations, and/or CAN/CGA B149, Installation Codes

# Materials

| Material Profile: | Operating Temperatures: | |
|---|---|---|
| ⚠ *CAUTION! Operating temperature limitations are as follows:* | Max. | Min. |
| **FKM:** (Fluorocarbon) Shows good resistance to a wide range of oils and solvents; especially all aliphatic, aromatic and halogenated hydrocarbons, acids, animal and vegetable oils. Hot water or hot aqueous solutions (over 70°F(21°C)) will attack FKM. | 350°F<br>177°C | -40°F<br>-40°C |
| **Nitrile:** General purpose, oil-resistant. Shows good solvent, oil, water and hydraulic fluid resistance. Should not be used with highly polar solvents like acetone and MEK, ozone, chlorinated hydrocarbons and nitro hydrocarbons. | 190°F<br>88°C | -10°F<br>-23°C |
| **Virgin PTFE:** (PFA/TFE) Chemically inert, virtually impervious. Very few chemicals are known to chemically react with PTFE; molten alkali metals, turbulent liquid or gaseous fluorine and a few fluoro-chemicals such as chlorine trifluoride or oxygen difluoride which readily liberate free fluorine at elevated temperatures. | 220°F<br>104°C | -35°F<br>-37°C |
| *Maximum and Minimum Temperatures are the limits for which these materials can be operated. Temperatures coupled with pressure affect the longevity of diaphragm pump components. Maximum life should not be expected at the extreme limits of the temperature ranges.* | | |
| **Metals:** | | |
| **Stainless Steel:** Equal to or exceeding ASTM specification A743 CF-8M for corrosion resistant iron chromium, iron chromium nickel and nickel based alloy castings for general applications. Commonly referred to as 316 Stainless Steel in the pump industry. | | |

For specific applications, always consult the Chemical Resistance Chart.

# Dimensional Drawings

## G1F Metallic - NPT

Dimensions in inches (mm dimensions in brackets). Dimensional Tolerance:±1/8" (± 3mm)

*The dimensions on this drawing are for reference only. A certified drawing can be requested if physical dimensions are needed.*

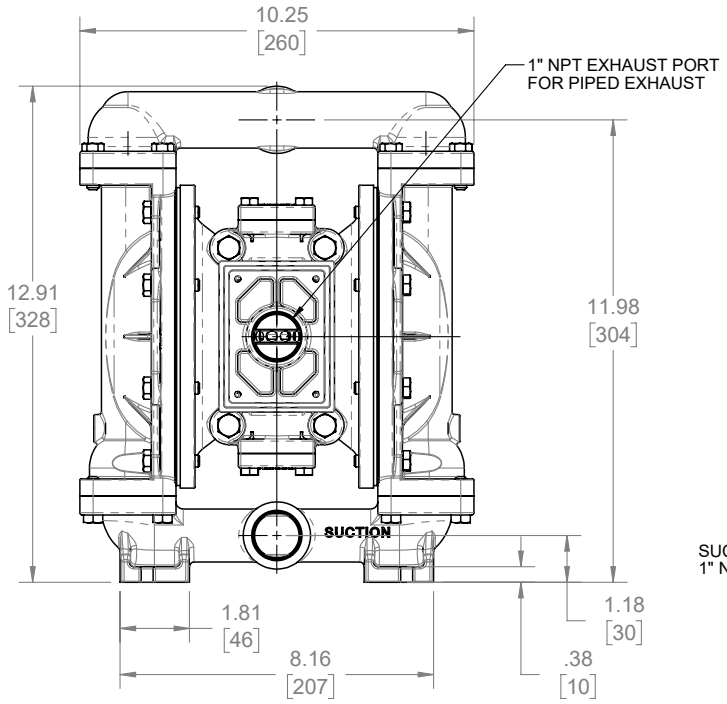


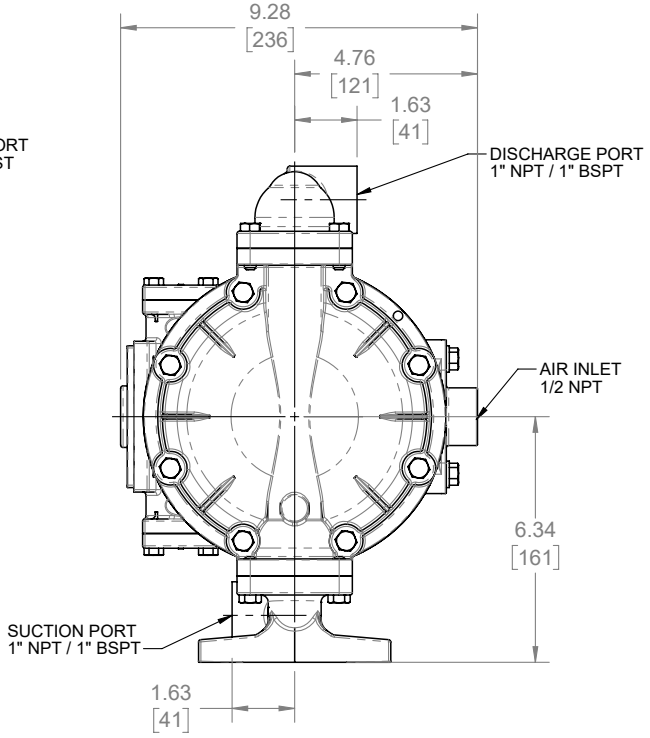


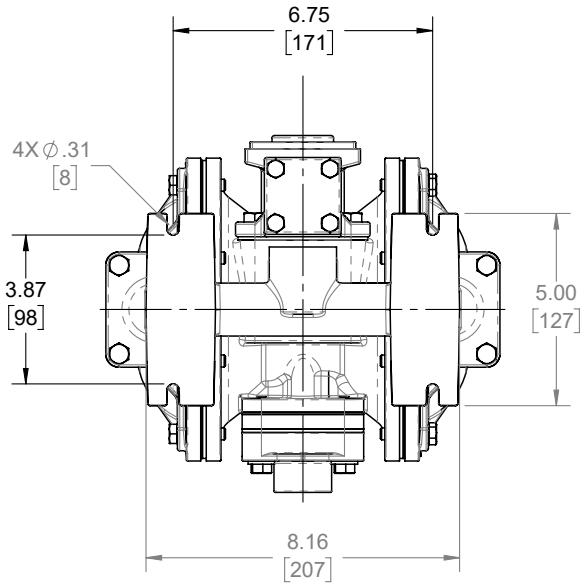


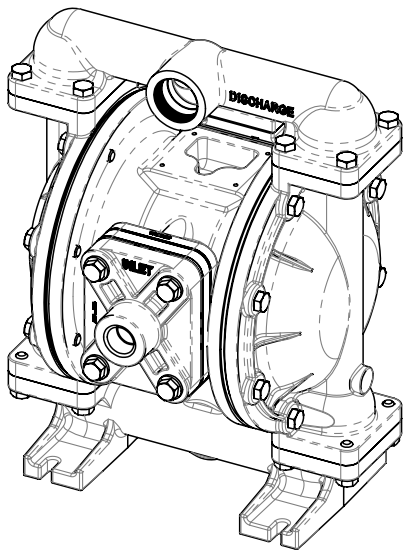

# Dimensional Drawings

## G1F Metallic - ANSI / DIN Flange (Stainless Steel Only)

Dimensions in inches (mm dimensions in brackets). Dimensional Tolerance:±1/8" (± 3mm)

*The dimensions on this drawing are for reference only. A certified drawing can be requested if physical dimensions are needed.*

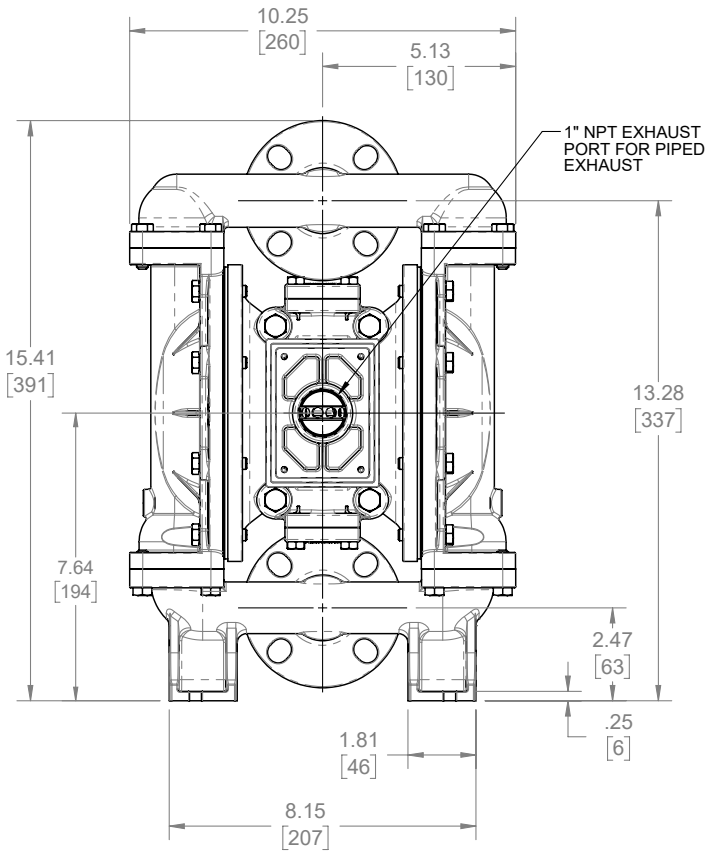


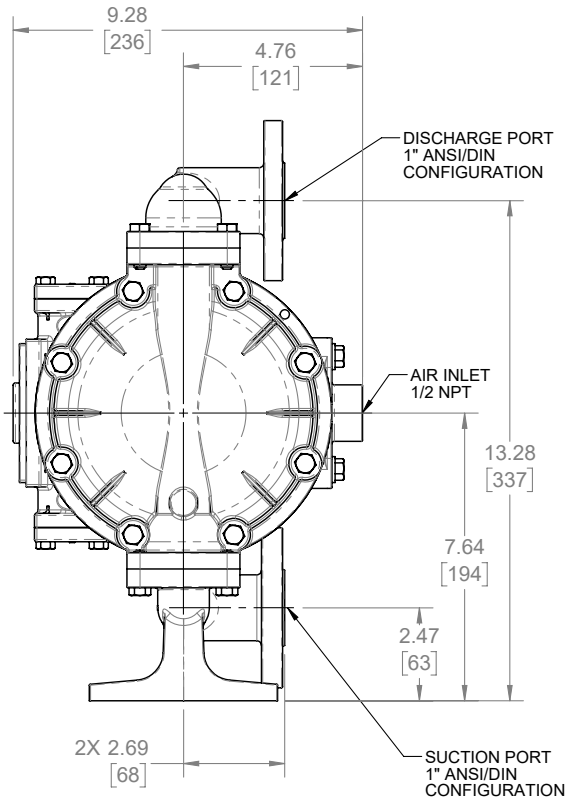


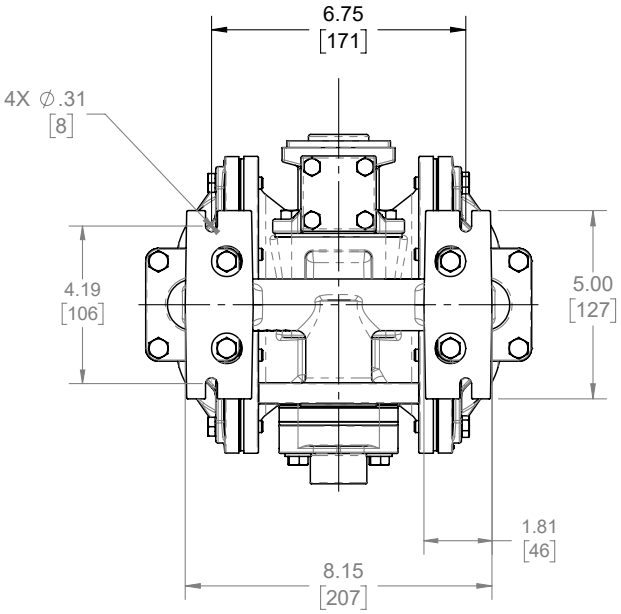


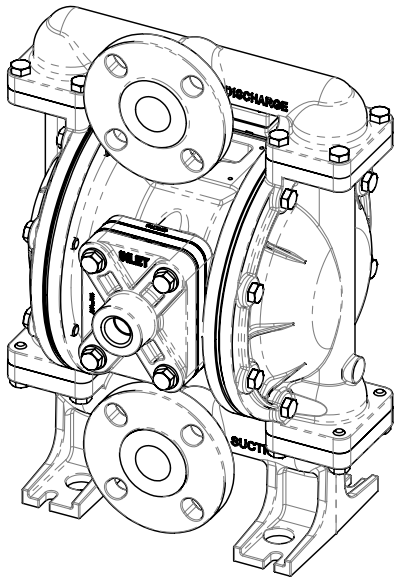

# Dimensional Drawings

## G1F Metallic - ANSI Flange (Aluminum / Cast Iron)

Dimensions in inches (mm dimensions in brackets). Dimensional Tolerance:±1/8" (± 3mm)

*The dimensions on this drawing are for reference only. A certified drawing can be requested if physical dimensions are needed.*

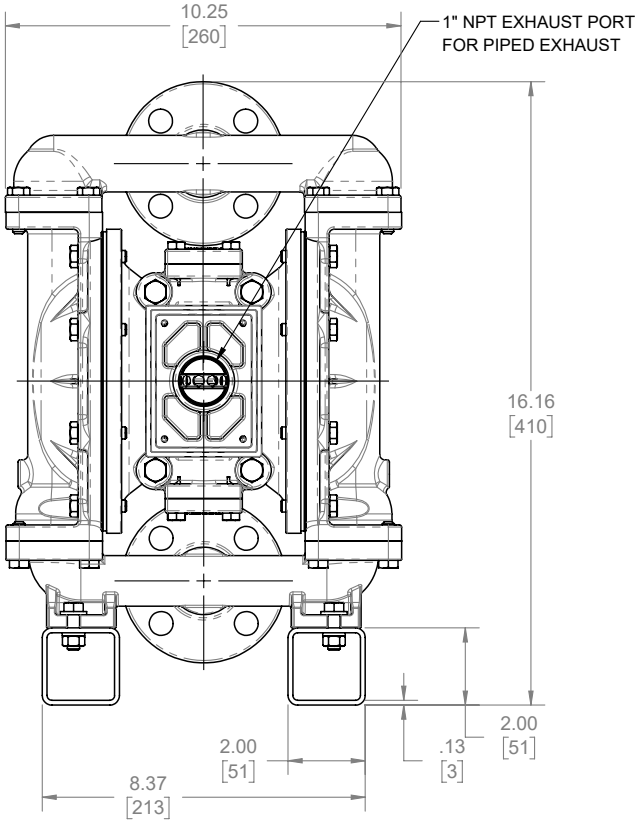


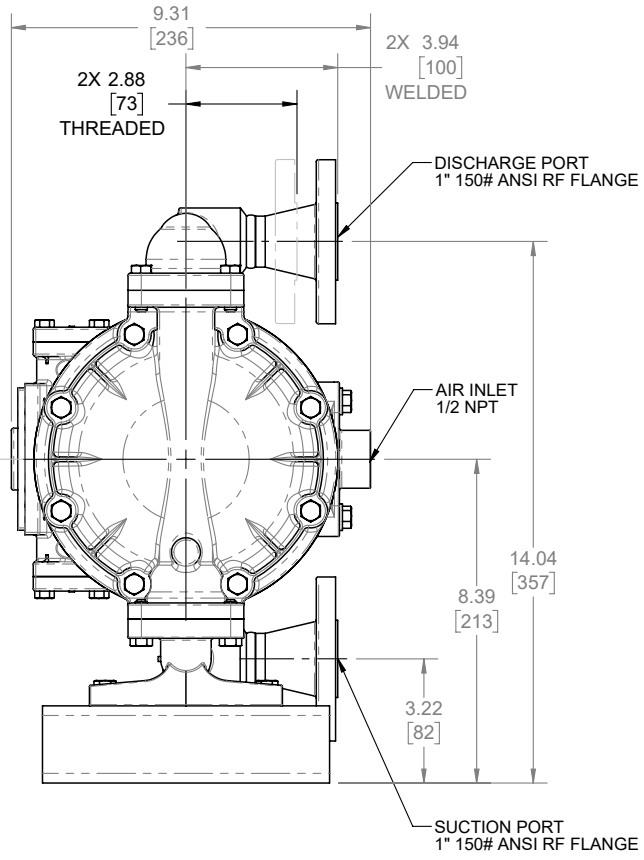


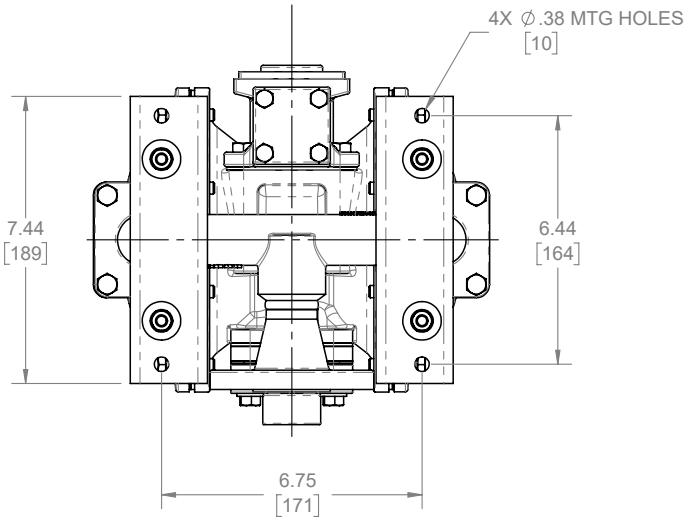


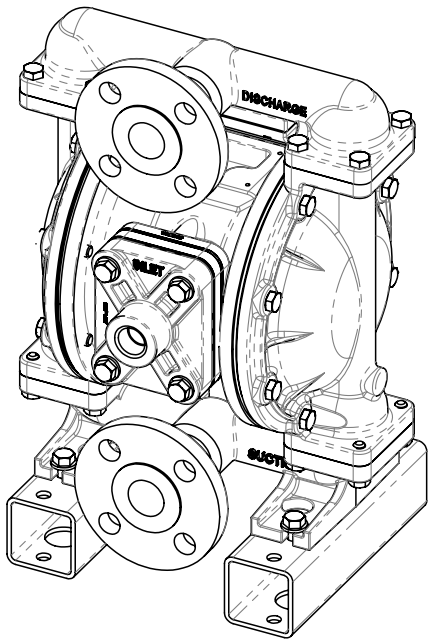

# Principle of Pump Operation

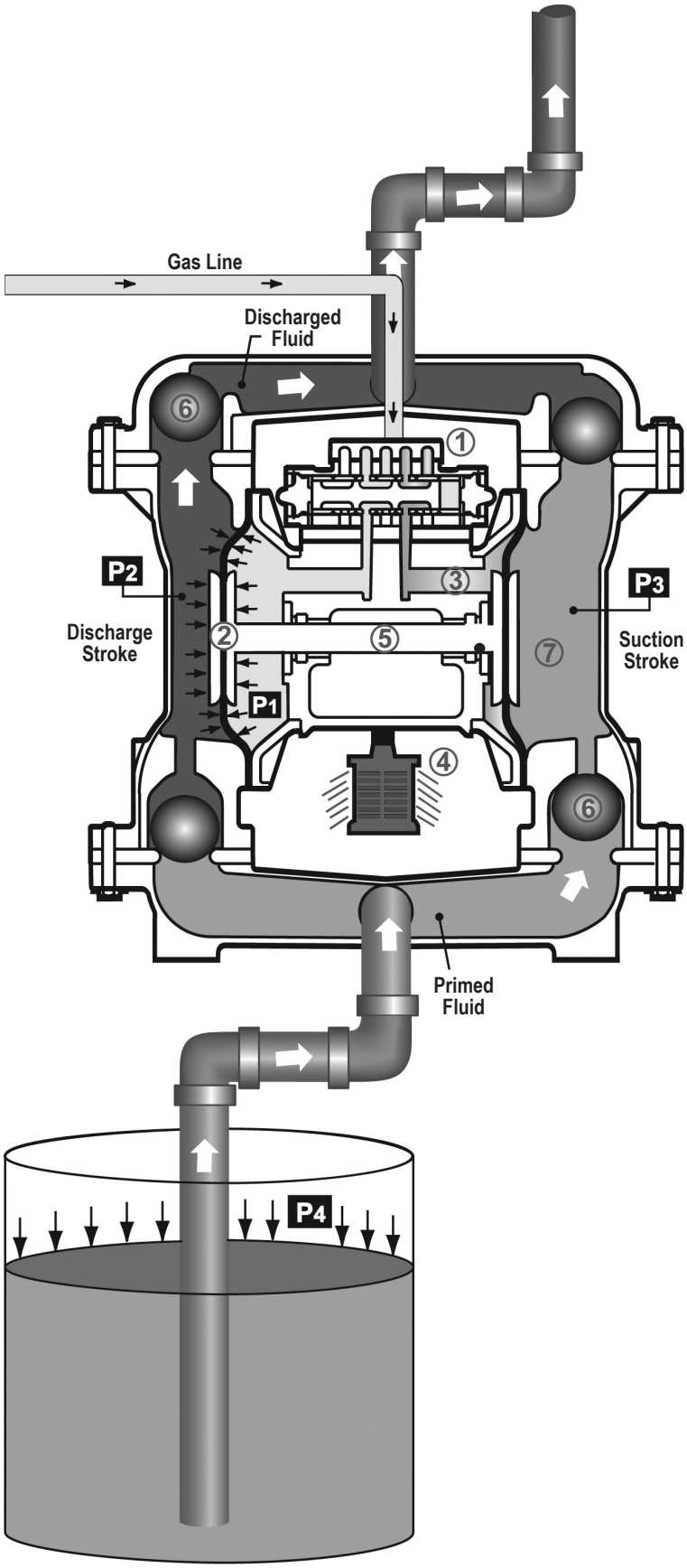


Gas-Operated Double Diaphragm pumps are powered by compressed gas, nitrogen or natural gas.

The main directional (gas) control valve ① distributes compressed gas to an gas chamber, exerting uniform pressure over the inner surface of the diaphragm ②. At the same time, the exhausting gas ③ from behind the opposite diaphragm
is directed through the gas valve assembly(s) to an exhaust port ④.

As inner chamber pressure **(P1)** exceeds liquid chamber pressure **(P2)**, the rod ⑤ connected diaphragms shift together creating discharge on one side and suction on the opposite side. The discharged and primed liquid's directions are controlled by the check valves (ball or flap)⑥ orientation.

The pump primes as a result of the suction stroke. The suction stroke lowers the chamber pressure **(P3)** increasing the chamber volume. This results in a pressure differential necessary for atmospheric pressure **(P4)** to push the fluid through the suction piping and across the suction side check valve and into the outer fluid chamber ⑦.

Suction (side) stroking also initiates the reciprocating (shifting, stroking or cycling) action of the pump. The suction diaphragm's movement is mechanically pulled through its stroke. The diaphragm's inner plate makes contact with an actuator plunger aligned to shift the pilot signaling valve. Once actuated, the pilot valve sends a pressure signal to the opposite end of the main directional gas valve, redirecting the compressed gas to the opposite inner chamber.

## SUBMERGED ILLUSTRATION

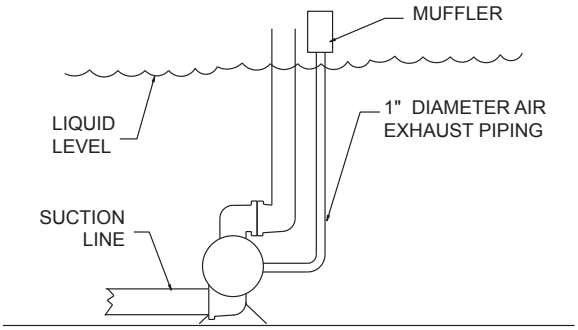


Pump can be submerged if the pump materials of construction are compatible with the liquid being pumped. The gas exhaust must be piped above the liquid level. When the pumped product source is at a higher level than the pump (flooded suction condition), pipe the exhaust higher than the product source to prevent siphoning spills.

# Recommended Installation Guide

Top Discharge Ball Valve Pump



① **020.063.000 Filter**
VENTING WARNING: This filter is equipped with a stainless steel manual drain. The port is 1/8" NPT. When draining moisture from the filter, first shut off the natural gas supply.

② **020.058.000 REGULATOR WITH GAGE**
PRESSURE WARNING: This regulator is to be installed at point of use with the pump. The maximum gas supply is 400psi. Full line pressure needs to be regulated below 400psi prior to the regulator installation position.

**VENTING WARNING:** This regulator is equipped with a 1/4" NPT vent port. In the event of a diaphragm rupture, natural gas can be exhausted into the surrounding environment. Connect a conductive hose or
pipe to the vent port to send the escaping natural gas to a safe area for gas reclamation. Make sure to ground the regulator, hose, and/or pipe.

**CAUTION**



***The gas exhaust should be piped to an area for safe disposition of the product being pumped, in the event of a diaphragm failure.***

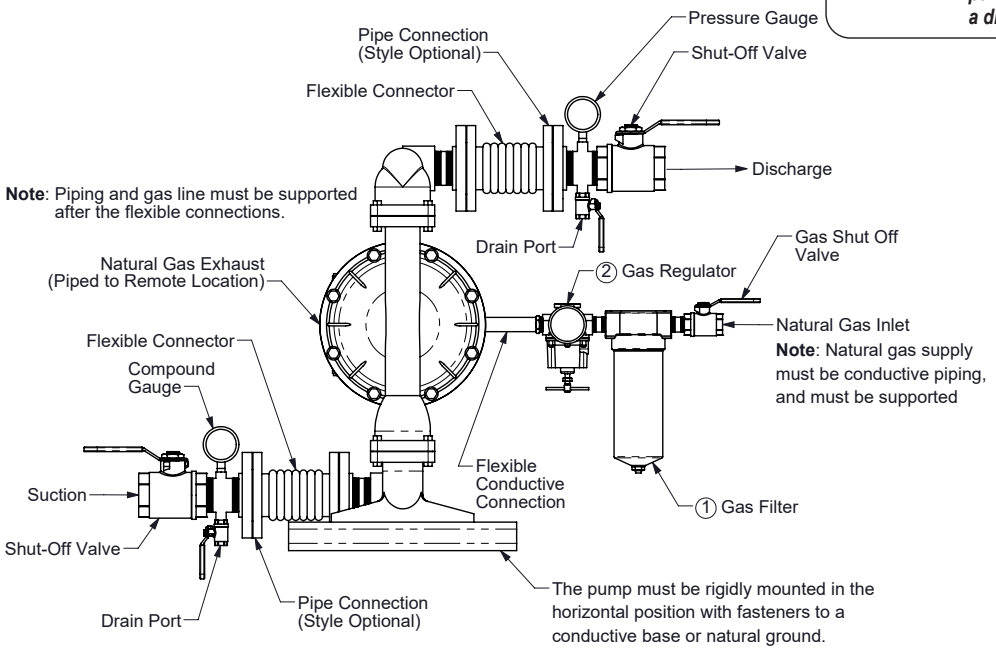


**Installation And Start-Up**
Locate the pump as close to the product being pumped as possible. Keep the suction line length and number of fittings to a minimum. Do not reduce the suction line diameter.

**Gas Supply**
Connect the pump gas inlet to an gas supply with sufficient capacity and pressure to achieve desired performance. A pressure regulating valve should be installed to insure gas supply pressure does not exceed recommended limits.

**Gas Valve Lubrication**
The gas distribution system is designed to operate WITHOUT lubrication. This is the standard mode of operation. If lubrication is desired, install an gas line lubricator set to deliver one drop of SAE 10 non-detergent oil for every 20 SCFM (9.4 liters/sec.) of gas the pump consumes. Consult the Performance Curve to determine gas consumption.

**Gas Line Moisture**
Water in the compressed gas supply may cause icing or freezing of the exhaust gas, causing the pump to cycle erratically or stop operating. Water in the gas supply can be reduced by using a point-of-use gas dryer.

**Gas Inlet And Priming**
To start the pump, slightly open the gas shut-off valve. After the pump primes, the gas valve can be opened to increase gas flow as desired. If opening the valve increases cycling rate, but does not increase the rate of flow, cavitation has occurred. The valve should be closed slightly to obtain the most efficient gas flow to pump flow ratio.

# Troubleshooting Guide



| Symptom: | Potential Cause(s): | Recommendation(s): |
|---|---|---|
| **Pump Cycles Once** | Deadhead (system pressure meets or exceeds gas supply pressure). | Increase the inlet gas pressure to the pump. Pump is designed for 1:1 pressure ratio at zero flow. (Does not apply to high pressure 2:1 units). |
| | Gas valve or intermediate gaskets installed incorrectly. | Install gaskets with holes properly aligned. |
| | Bent or missing actuator plunger. | Remove pilot valve and inspect actuator plungers. |
| **Pump Will Not Operate / Cycle** | Pump is over lubricated. | Set lubricator on lowest possible setting or remove. Units are designed for lube free operation. |
| | Lack of gas (line size, PSI, CFM). | Check the gas line size and length, compressor capacity (HP vs. cfm required). |
| | Check gas distribution system. | Disassemble and inspect main gas distribution valve, pilot valve and pilot valve actuators. |
| | Discharge line is blocked or clogged manifolds. | Check for inadvertently closed discharge line valves. Clean discharge manifolds/piping. |
| | Deadhead (system pressure meets or exceeds gas supply pressure). | Increase the inlet gas pressure to the pump. Pump is designed for 1:1 pressure ratio at zero flow. (Does not apply to high pressure 2:1 units). |
| | Blocked gas exhaust muffler. | Remove muffler screen, clean or de-ice, and re-install. |
| | Pumped fluid in gas exhaust muffler. | Disassemble pump chambers. Inspect for diaphragm rupture or loose diaphragm plate assembly. |
| | Pump chamber is blocked. | Disassemble and inspect wetted chambers. Remove or flush any obstructions. |
| **Pump Cycles and Will Not Prime or No Flow** | Cavitation on suction side. | Check suction condition (move pump closer to product). |
| | Check valve obstructed. Valve ball(s) not seating properly or sticking. | Disassemble the wet end of the pump and manually dislodge obstruction in the check valve pocket. Clean out around valve ball cage and valve seat area. Replace valve ball or valve seat if damaged. Use heavier valve ball material. |
| | Valve ball(s) missing (pushed into chamber or manifold). | Worn valve ball or valve seat. Worn fingers in valve ball cage (replace part). Check Chemical Resistance Guide for compatibility. |
| | Valve ball(s) / seat(s) damaged or attacked by product. | Check Chemical Resistance Guide for compatibility. |
| | Check valve and/or seat is worn or needs adjusting. | Inspect check valves and seats for wear and proper setting. Replace if necessary. |
| | Suction line is blocked. | Remove or flush obstruction. Check and clear all suction screens or strainers. |
| | Excessive suction lift. | For lifts exceeding 20' of liquid, filling the chambers with liquid will prime the pump in most cases. |
| | Suction side gas leakage or gas in product. | Visually inspect all suction-side gaskets and pipe connections. |
| | Pumped fluid in gas exhaust muffler. | Disassemble pump chambers. Inspect for diaphragm rupture or loose diaphragm plate assembly. |
| **Pump Cycles Running Sluggish / Stalling, Flow Unsatisfactory** | Over lubrication. | Set lubricator on lowest possible setting or remove. Units are designed for lube free operation. |
| | Icing. | Remove muffler screen, de-ice, and re-install. Install a point of use gas drier. |
| | Clogged manifolds. | Clean manifolds to allow proper gas flow. |
| | Deadhead (system pressure meets or exceeds gas supply pressure). | Increase the inlet gas pressure to the pump. Pump is designed for 1:1 pressure ratio at zero flow. (Does not apply to high pressure 2:1 units). |
| | Cavitation on suction side. | Check suction (move pump closer to product). |
| | Lack of gas (line size, PSI, CFM). | Check the gas line size, length, compressor capacity. |
| | Excessive suction lift. | For lifts exceeding 20' of liquid, filling the chambers with liquid will prime the pump in most cases. |
| | Gas supply pressure or volume exceeds system hd. | Decrease inlet gas (press. and vol.) to the pump. Pump is cavitating the fluid by fast cycling. |
| | Undersized suction line. | Meet or exceed pump connections. |
| | Restrictive or undersized gas line. | Install a larger gas line and connection. |
| | Suction side gas leakage or gas in product. | Visually inspect all suction-side gaskets and pipe connections. |
| | Suction line is blocked. | Remove or flush obstruction. Check and clear all suction screens or strainers. |
| | Pumped fluid in gas exhaust muffler. | Disassemble pump chambers. Inspect for diaphragm rupture or loose diaphragm plate assembly. |
| | Check valve obstructed. | Disassemble the wet end of the pump and manually dislodge obstruction in the check valve pocket. |
| | Check valve and/or seat is worn or needs adjusting. | Inspect check valves and seats for wear and proper setting. Replace if necessary. |
| | Entrained gas or vapor lock in chamber(s). | Purge chambers through tapped chamber vent plugs. Purging the chambers of gas can be dangerous. |
| **Product Leaking Through Exhaust** | Diaphragm failure, or diaphragm plates loose. | Replace diaphragms, check for damage and ensure diaphragm plates are tight. |
| | Diaphragm stretched around center hole or bolt holes. | Check for excessive inlet pressure or gas pressure. Consult Chemical Resistance Chart for compatibility with products, cleaners, temperature limitations and lubrication. |
| **Premature Diaphragm Failure** | Cavitation. | Enlarge pipe diameter on suction side of pump. |
| | Excessive flooded suction pressure. | Move pump closer to product. Raise pump/place pump on top of tank to reduce inlet pressure. Install Back pressure device (Tech bulletin 41r). Add accumulation tank or pulsation dampener. |
| | Misapplication (chemical/physical incompatibility). | Consult Chemical Resistance Chart for compatibility with products, cleaners, temperature limitations and lubrication. |
| | Incorrect diaphragm plates or plates on backwards, installed incorrectly or worn. | Check Operating Manual to check for correct part and installation. Ensure outer plates have not been worn to a sharp edge. |
| **Unbalanced Cycling** | Excessive suction lift. | For lifts exceeding 20' of liquid, filling the chambers with liquid will prime the pump in most cases. |
| | Undersized suction line. | Meet or exceed pump connections. |
| | Pumped fluid in gas exhaust muffler. | Disassemble pump chambers. Inspect for diaphragm rupture or loose diaphragm plate assembly. |
| | Suction side gas leakage or gas in product. | Visually inspect all suction-side gaskets and pipe connections. |
| | Check valve obstructed. | Disassemble the wet end of the pump and manually dislodge obstruction in the check valve pocket. |
| | Check valve and/or seat is worn or needs adjusting. | Inspect check valves and seats for wear and proper setting. Replace if necessary. |
| | Entrained gas or vapor lock in chamber(s). | Purge chambers through tapped chamber vent plugs. |

***For additional troubleshooting tips contact After Sales Support at service.warrenrupp@idexcorp.com or 419-524-8388***

# Composite Repair Parts Drawing

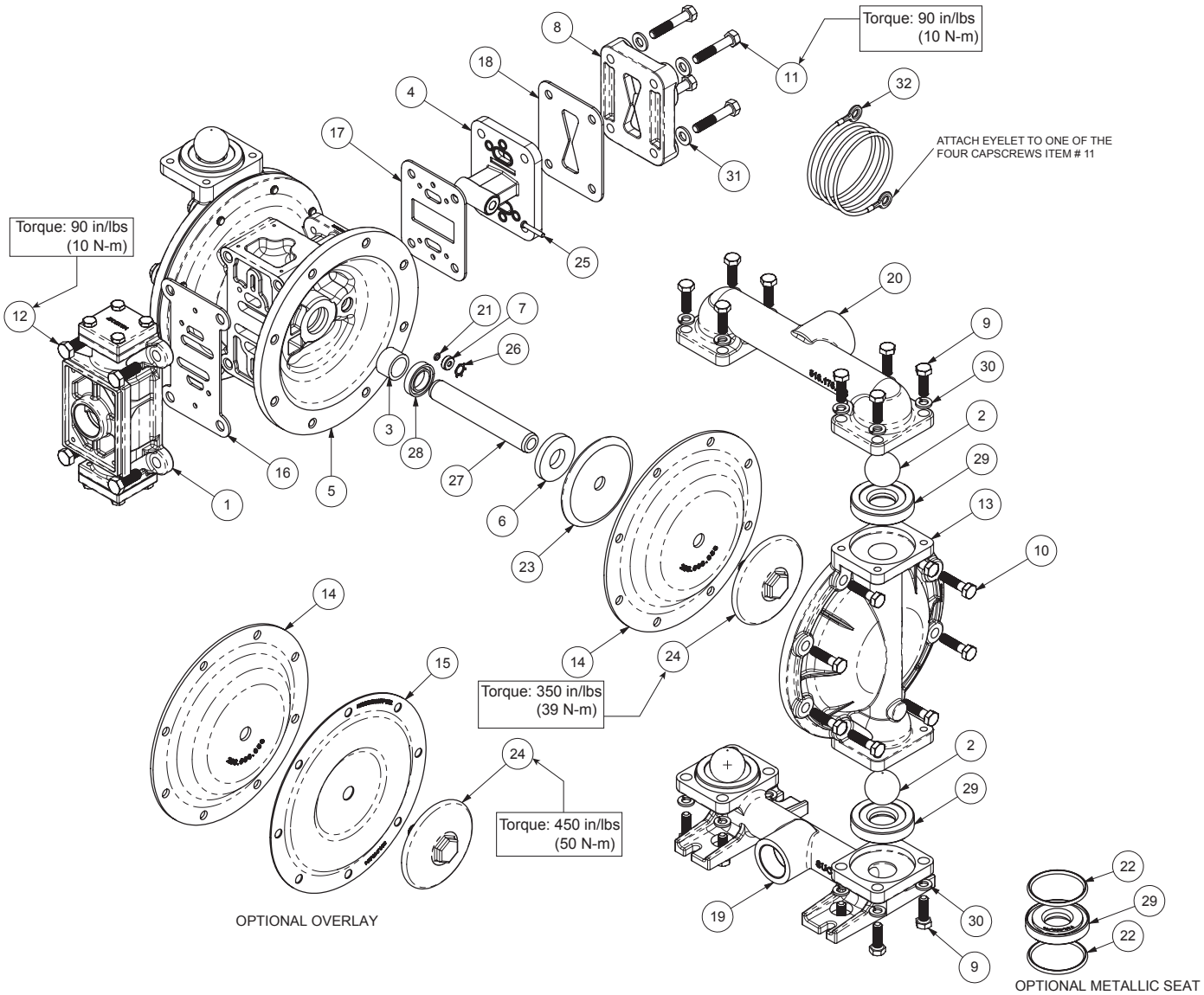




# Service & Repair Kits

**476.228.000** **Gas End Kit**
Seals, O-Rings, Gaskets, Retaining Rings, Valve Assembly and Pilot Valve Assembly

**476.228.363** **Gas End Kit**
FKM Seals, O-Rings, Gaskets, Retaining Rings, Valve Assembly and Pilot Valve Assembly

**476.204.360** **Wetted End Kit**
Nitrile Diaphagms, Nitrle Check Balls and PTFE Check Valve Seats

**476.204.649** **Wetted End Kit**
Nitrile Diaphragms, PTFE Overlay Diaphragms, PTFE Check Balls and PTFE Check Valve Seats

**476.204.672** **Wetted End Kit**
Nitrile Diaphragms, PTFE Check Balls and PTFE Check Valve Seats

**476.319.000** **Gas End Wear Kit**
Nitrile 0-rings, Bumpers and Seals

**476.319.363** **Gas End Wear Kit**
FKM 0-rings, Bumpers, and Seals

**474.008.360** **Wet End Wear Kit**
Nitrile Diaphagms

**474.015.604** **Wet End Wear Kit**
Nitrile Backer Diaphragms PTFE Overlay Diaphragms

**475.212.330** **Hardware Kit**
Zinc Plated Capscrews, Washers, and Hex Nuts

**475.305.000** **Installation Conversion Kit**
(Convert stainless steel pumps with threaded / welded flanges to cast flanges) Includes: Spacer Foot and Harware

# Composite Repair Parts List

| Item | Part Number | Description | Qty |
|---|---|---|---|
| ◯1 | 031.179.000 | Stainless Steel Gas Valve Assembly (use with Option B) | 1 |
| | 031.179.363 | Stainless Steel Gas Valve Assembly with FKM O-rings (used with Option D) | 1 |
| | 031.183.000 | Gas Valve Assembly | 1 |
| | 031.183.363 | Gas Valve Assembly | 1 |
| □2 | 050.028.360 | Ball, Check | 4 |
| | 050.028.600 | Ball, Check | 4 |
| 3 | 070.012.170 | Bushing | 2 |
| ◯4 | 095.110.000 | Pilot Valve Assembly | 1 |
| | 095.110.363 | Pilot Valve Assembly with FKM O-rings | 1 |
| 5 | 114.025.157 | Intermediate Bracket | 1 |
| ◯6 | 132.019.357 | Bumper, Diaphragm | 2 |
| | 132.019.363 | Bumper, Diaphragm | 2 |
| ◯7 | 135.036.506 | Bushing, Plunger | 2 |
| 8 | 165.120.000 | Cap, Gas Inlet Assembly | 1 |
| 9 | 170.044.330 | Capscrew, Hex Hd 5/16.18 X .1.00 | 16 |
| 10 | 170.045.330 | Capscrew, Hex Hd 5/16.18 X 1.25 | 16 |
| 11 | 170.069.330 | Capscrew, Hex Hd 5/16.18 X 1.75 | 4 |
| 12 | 170.006.330 | Capscrew, Hex 3/8.16 X 1.00 | 4 |
| 13 | 196.173.157 | Chamber, Outer | 2 |
| | 196.173.110 | Chamber, Outer | 2 |
| □14 | 286.008.360 | Diaphragm | 2 |
| □15 | 286.015.604 | Diaphragm, Overlay | 2 |
| ◯16 | 360.093.360 | Gasket, Natural Gas Valve | 1 |
| ◯17 | 360.114.360 | Gasket, Pilot Valve | 1 |
| ◯18 | 360.104.379 | Gasket, Gas Inlet | 1 |
| 19 | 518.175.156 | Manifold, Suction | 1 |
| | 518.175.156E | Manifold, Suction 1"BSP (Tapered) | 1 |
| | 518.175.156W | Welded Raised Face 150# 1" ANSI Flanged Manifold | 1 |
| | 518.175.110 | Manifold, Suction | 1 |
| | 518.175.110E | Manifold, Suction 1"BSP (Tapered) | 1 |
| | 518.240.110 | Manifold, Suction ANSI/DIN Flange | 1 |
| 20 | 518.176.156 | Manifold, Discharge | 1 |
| | 518.176.156E | Manifold, Discharge 1"BSP (Tapered) | 1 |
| | 518.176.156W | Welded Raised Face 150# 1" ANSI Flanged Manifold | 1 |
| | 518.176.110 | Manifold, Discharge | 1 |
| | 518.176.110E | Manifold, Discharge 1"BSP (Tapered) | 1 |
| | 518.241.110 | Manifold, Discharge ANSI/DIN Flange | 1 |

| Item | Part Number | Description | Qty |
|---|---|---|---|
| ◯21 | 560.001.363 | O-Ring | 2 |
| | 560.001.360 | O-Ring | 2 |
| □22 | 560.091.360 | O-Ring (metallic seats only) | 8 |
| | 560.091.611 | O-Ring (metallic seats only) | 8 |
| 23 | 612.022.330 | Plate, Inner Diaphragm | 2 |
| 24 | 612.108.157 | Plate, Outer Diaphragm Assembly | 2 |
| | 612.101.110 | Plate, Outer Diaphragm Assembly | 2 |
| ◯25 | 620.022.115 | Pin, Actuator | 2 |
| ◯26 | 675.042.115 | Ring, Retaining | 2 |
| 27 | 685.060.120 | Rod, Diaphragm | 1 |
| ◯28 | 720.010.363 | Seal, U.Cup | 2 |
| | 720.010.360 | Seal, U.Cup | 2 |
| □29 | 722.098.600 | Seat, Check Valve | 4 |
| | 722.098.110 | Seat, Check Valve | 4 |
| | 722.098.150 | Seat, Check Valve | 4 |
| 30 | 900.004.330 | Washer, Lock, 5/16 | 16 |
| 31 | 901.038.330 | Flat, Washer | 4 |
| 32 | 920.025.000 | Ground Strap | 1 |

Parts not shown used with ANSI Flange Options R (Aluminum & Cast Iron), and W (Aluminum only)

| | | |
|---|---|---|
| 170.045.330 | Hex Cap Screw | 4 |
| 326.050.080 | Mounting Foot | 2 |
| 545.003.330 | Hex Nut | 4 |
| 900.001.330 | Lock Washer | 4 |
| 901.002.330 | Flat Washer | 8 |

Parts not shown used with Raised Face ANSI Flange Option R ONLY:

| | | |
|---|---|---|
| 334.112.110 | 1" ANSI 150# Raised Face Flange and Threaded Pipe Connection | 2 |
| 538.035.110 | 1" NPT Pipe Nipple x 1 1/2 Long | 2 |

**LEGEND:**

◯ = Items contained within Gas End Kits

□ = Items contianed within Wet End Kits

***Note:*** *Kits contain components specific to the material codes.*

**ATEX Compliant**

# Material Codes - The Last 3 Digits of Part Number

000.....Assembly, sub-assembly; and some purchased items
010.....Cast Iron
015.....Ductile Iron
020.....Ferritic Malleable Iron
080.....Carbon Steel, AISI B-1112
110.....Alloy Type 316 Stainless Steel
111.....Alloy Type 316 Stainless Steel (Electro Polished)
112.....Alloy C
113.....Alloy Type 316 Stainless Steel (Hand Polished)
114.....303 Stainless Steel
115.....302/304 Stainless Steel
117.....440-C Stainless Steel (Martensitic)
120.....416 Stainless Steel (Wrought Martensitic)
148.....Hardcoat Anodized Aluminum
150.....6061-T6 Aluminum
152.....2024-T4 Aluminum (2023-T351)
155.....356-T6 Aluminum
156.....356-T6 Aluminum
157.....Die Cast Aluminum Alloy #380
158.....Aluminum Alloy SR-319
162.....Brass, Yellow, Screw Machine Stock
165.....Cast Bronze, 85-5-5-5
166.....Bronze, SAE 660
170.....Bronze, Bearing Type, Oil Impregnated
180.....Copper Alloy
305.....Carbon Steel, Black Epoxy Coated
306.....Carbon Steel, Black PTFE Coated
307.....Aluminum, Black Epoxy Coated
308.....Stainless Steel, Black PTFE Coated
309.....Aluminum, Black PTFE Coated
313.....Aluminum, White Epoxy Coated
330.....Zinc Plated Steel
332.....Aluminum, Electroless Nickel Plated
333.....Carbon Steel, Electroless Nickel Plated
335.....Galvanized Steel
337.....Silver Plated Steel
351.....Food Grade Santoprene®
353.....Geolast; Color: Black
354.....Injection Molded #203-40 Santoprene® Duro 40D +/-5; Color: RED
356.....Hytrel®
357.....Injection Molded Polyurethane
358.....Urethane Rubber (Some Applications) (Compression Mold)
359.....Urethane Rubber
360.....Nitrile Rubber Color coded: RED
363.....FKM (Fluorocarbon) Color coded: YELLOW
364.....EPDM Rubber Color coded: BLUE
365.....Neoprene Rubber Color coded: GREEN
366.....Food Grade Nitrile
368.....Food Grade EPDM
371.....Philthane (Tuftane)
374.....Carboxylated Nitrile
375.....Fluorinated Nitrile
378.....High Density Polypropylene
379.....Conductive Nitrile
408.....Cork and Neoprene
425.....Compressed Fibre
426.....Blue Gard
440.....Vegetable Fibre
500.....Delrin® 500
502.....Conductive Acetal, ESD-800
503.....Conductive Acetal, Glass-Filled
506.....Delrin® 150
520.....Injection Molded PVDF Natural color
540.....Nylon
542.....Nylon
544.....Nylon Injection Molded
550.....Polyethylene
551.....Glass Filled Polypropylene
552.....Unfilled Polypropylene
555.....Polyvinyl Chloride
556.....Black Vinyl
558.....Conductive HDPE
570.....Rulon II®
580.....Ryton®
600.....PTFE (virgin material) Tetrafluorocarbon (TFE)
603.....Blue Gylon®
604.....PTFE
606.....PTFE
607.....Envelon
608.....Conductive PTFE
610.....PTFE Encapsulated Silicon
611.....PTFE Encapsulated FKM
632.....Neoprene/Hytrel®
633.....FKM/PTFE
634.....EPDM/PTFE
635.....Neoprene/PTFE
637.....PTFE, FKM/PTFE
638.....PTFE, Hytrel®/PTFE
639.....Nitrile/TFE
643.....Santoprene®/EPDM
644.....Santoprene®/PTFE
656.....Santoprene® Diaphragm and Check Balls/EPDM Seats
661.....EPDM/Santoprene®
666.....FDA Nitrile Diaphragm, PTFE Overlay, Balls, and Seals
668.....PTFE, FDA Santoprene®/PTFE

- Delrin and Hytrel are registered tradenames of E.I. DuPont.
- Nylatron is a registered tradename of Polymer Corp.
- Gylon is a registered tradename of Garlock, Inc.
- Santoprene is a registered tradename of Exxon Mobil Corp.
- Rulon II is a registered tradename of Dixion Industries Corp.
- Ryton is a registered tradename of Phillips Chemical Co.
- Valox is a registered tradename of General Electric Co.

## RECYCLING

Many components of SANDPIPER® AODD pumps are made of recyclable materials. We encourage pump users to recycle worn out parts and pumps whenever possible, after any hazardous pumped fluids are thoroughly flushed.

# Gas Distribution Valve Assembly

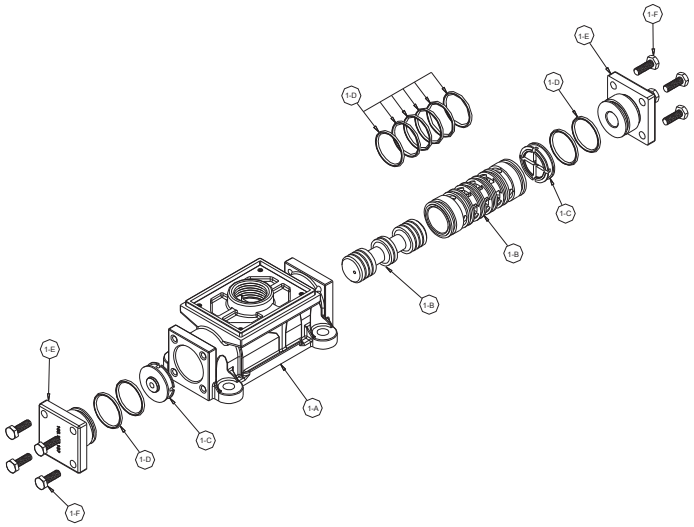


### Valve Assembly for Aluminum Mid Sections

## Natural Gas Assembly Parts List

| Item | Part Number | Description | Qty |
|---|---|---|---|
| **1** | **031-183-000** | **Gas Valve Assembly** | **1** |
| 1-A | 095-109-157 | Valve Body | 1 |
| 1-B | 031-139-000 | Sleeve and Spool Set | 1 |
| 1-C | 132-029-552 | Bumper | 2 |
| 1-D | 560-020-360 | O-Ring | 10 |
| 1-E | 165-127-157 | Cap, End | 2 |
| 1-F | 170-032-330 | Capscrew | 8 |

| Item | Part Number | Description | Qty |
|---|---|---|---|
| **1** | **031-183-363** | **Gas Valve Assembly (FKM)** | **1** |
| 1-D | 560-020-363 | O-Ring (FKM) | 10 |

(includes all other items used on 031.183.000)

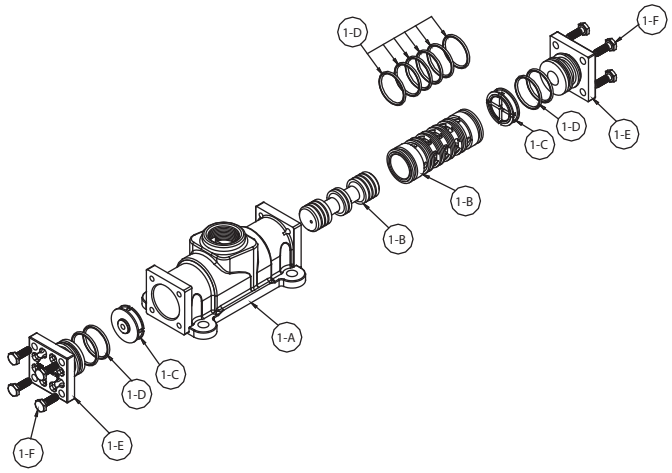


### Valve Assembly for Stainless Steel Mid Sections

## Natural Gas Assembly Parts List

| Item | Part Number | Description | Qty |
|---|---|---|---|
| **1** | **031-179-000** | **Gas Valve Assembly** | **1** |
| 1-A | 095-109-110 | Valve Body | 1 |
| 1-B | 031-139-000 | Sleeve and Spool Set | 1 |
| 1-C | 132-029-552 | Bumper | 2 |
| 1-D | 560-020-360 | O-Ring | 10 |
| 1-E | 165-127-110 | Cap, End | 2 |
| 1-F | 170-032-115 | Capscrew | 8 |
| | 170-032-110 | 3/16" Stainless Steel Option | 8 |

| Item | Part Number | Description | Qty |
|---|---|---|---|
| **1** | **031-179-363** | **Gas Valve Assembly (FKM)** | **1** |
| 1-D | 560-020-363 | O-Ring (FKM) | 10 |

(includes all other items used on 031.179.000)

## Gas Distribution Valve Servicing

**Step 1:** Remove cap screws (1-F).

**Step 2:** Remove end cap (1-E) and bumper (1-C).

**Step 3:** Remove spool part of (1-B) (caution: do not scratch).

**Step 4:** Press sleeve (1-B) from body (1-A).

**Step 5:** Inspect O-Ring (1-C) and replace if necessary.

**Step 6:** Lightly lubricate O-Rings (1-C) on spool (1-B).

**Step 7:** Press sleeve (1-B) into body (1-A).

**Step 8:** Reassemble in reverse order, starting with step 3.

**Note:** Sleeve and spool (1-B) set is match ground to a specified clearance sleeve and spools (1-B) cannot be interchanged.

**IMPORTANT**

***Read these instructions completely, before installation and start-up. It is the responsibility of the purchaser to retain this manual for reference. Failure to comply with the recommendations stated in this manual will damage the pump, and void factory warranty.***

**ATEX Compliant**

# Pilot Valve Assembly

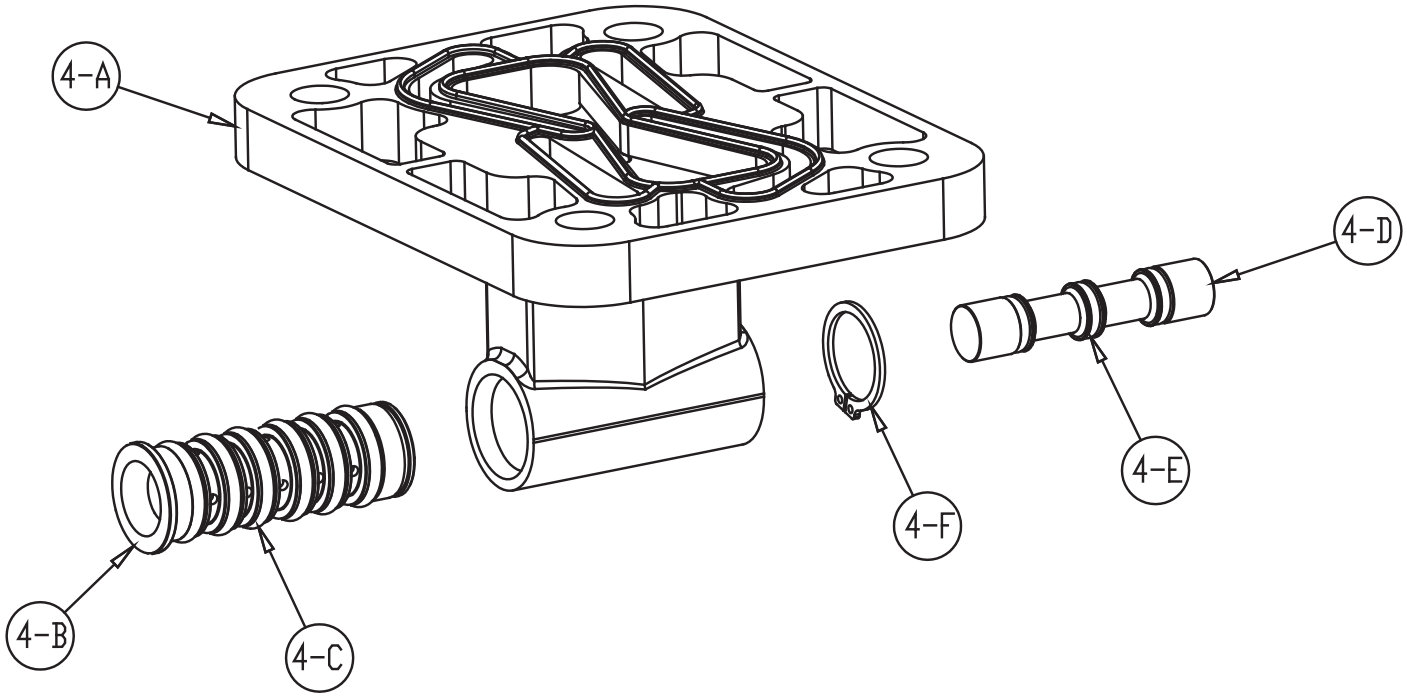


## Pilot Valve Servicing

With Pilot Valve removed from pump.

**Step 1:** Remove snap ring (4-F).

**Step 2:** Remove sleeve (4-B), inspect O-Rings (4-C), replace if required.

**Step 3:** Remove spool (4-D) from sleeve (4-B), inspect O-Rings (4-E), replace if required.

**Step 4:** Lightly lubricate O-Rings (4-C) and (4-E).

Reassemble in reverse order.

## Pilot Valve Assembly Parts List

| Item | Part Number | Description | Qty |
|---|---|---|---|
| 4 | 095-110-000 | Pilot Valve Assembly | 1 |
| 4-A | 095-095-157 | Valve Body | 1 |
| 4-B | 755-052-000 | Sleeve (With O-Rings) | 1 |
| 4-C | 560-033-360 | O-Ring (Sleeve) | 6 |
| 4-D | 775-055-000 | Spool (With O-Rings) | 1 |
| 4-E | 560-023-360 | O-Ring (Spool) | 3 |
| 4-F | 675-037-080 | Retaining Ring | 1 |

| Item | Part Number | Description | Qty |
|---|---|---|---|
| 4 | 095-110-363 | Pilot Valve Assembly | 1 |
| 4-B | 755-052-363 | Sleeve (With O-Rings) (FKM) | 1 |
| 4-C | 560-033-363 | O-Ring (Sleeve) (FKM) | 6 |
| 4-D | 775.055.363 | Spool (With O-Rings) (FKM) | 1 |
| 4-E | 560-023-363 | O-Ring (Spool) (FKM) | 3 |

(includes all other items used on 095-110-000)

# Intermediate Assembly

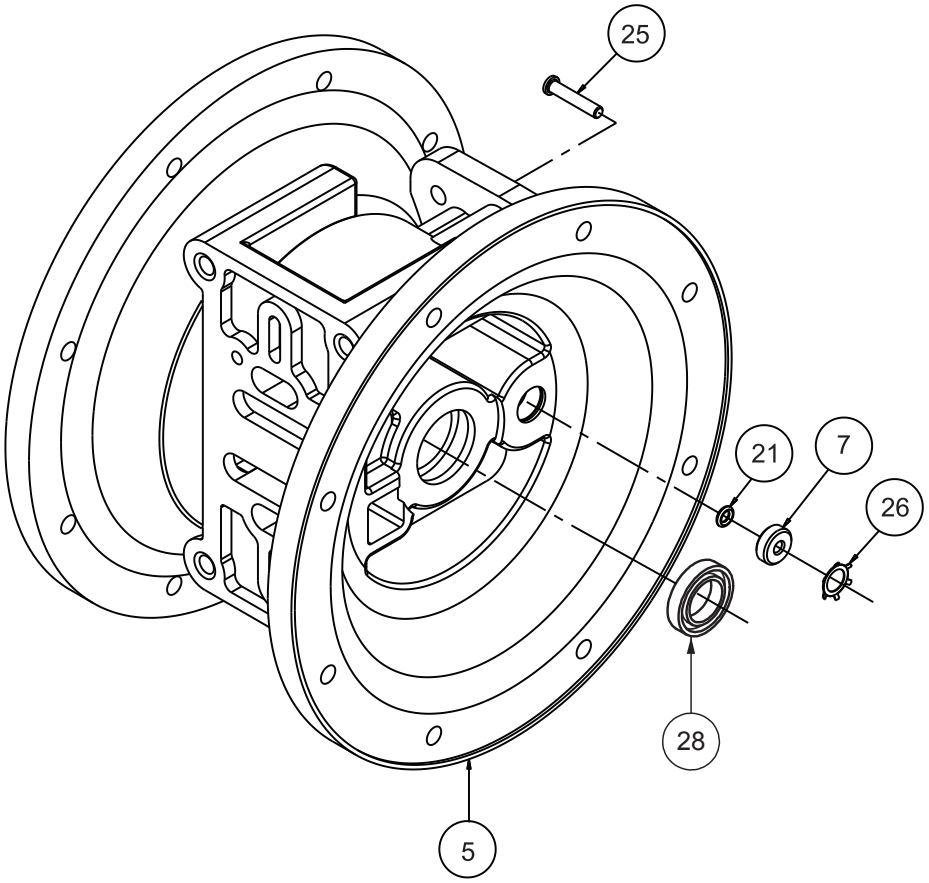




## Intermediate Assembly Drawing

**Step 1:** Remove plunger, actuator (25) from center of intermediate pilot valve cavity.

**Step 2:** Remove Ring, Retaining (26), discard.

**Step 3:** Remove bushing, plunger (7), inspect for wear and replace if necessary with genuine parts.

**Step 4:** Remove O-Ring (21), inspect for wear and replace if necessary with genuine parts.

**Step 5:** Lightly lubricate O-Ring (21) and insert into intermediate.

**Step 6:** Utilizing a new Ring, Retaining (26) reassemble in reverse order

**Step 7:** Remove Seal, Diaphragm Rod (28).

**Step 8:** Clean seal area, lightly lubricate and install new Seal, Diaphragm Rod (28).

**⚠ IMPORTANT**



***When the pumped product source is at a higher level than the pump (flooded suction condition), pipe the exhaust higher than the product source to prevent siphoning spills. In the event of a diaphragm failure a complete rebuild of the center section is recommended.***

## Intermediate Assembly Parts List

| Item | Part Number | Description | Qty |
|---|---|---|---|
| 5 | 114-025-157 | Intermediate | 1 |
| 7 | 135-036-506 | Bushing, Plunger* | 2 |
| 21 | 560-001-360 | O-Ring | 2 |
| | 560-001-363 | O-Ring (FKM) | 2 |
| 25 | 620-022-115 | Plunger, Actuator* | 2 |
| 26 | 675-042-115 | Ring, Retaining | 2 |
| 28 | 720-010-375 | Seal, Diaphragm Rod* | 2 |
| | 720-010-363 | Seal, Diaphragm Rod* (FKM) | 2 |

# Diaphragm Service Drawing, with Overlay

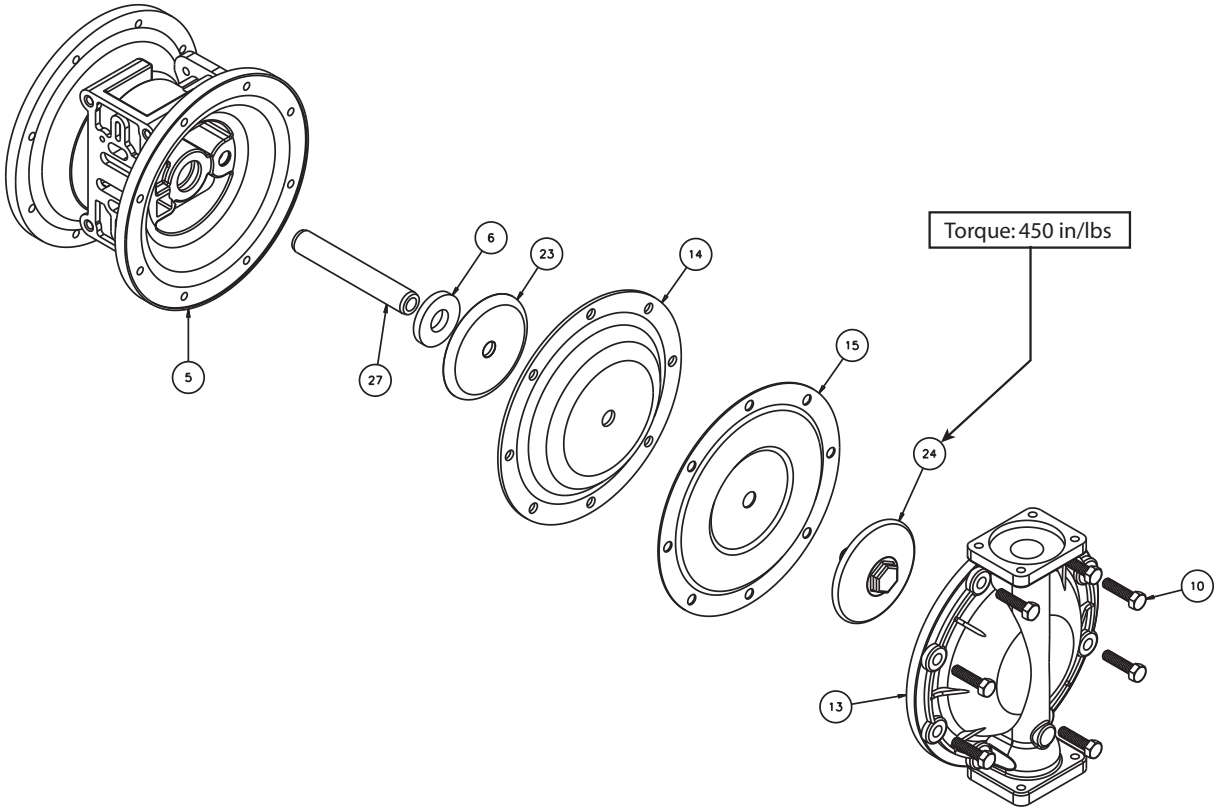


# Diaphragm Service Drawing, Non-Overlay

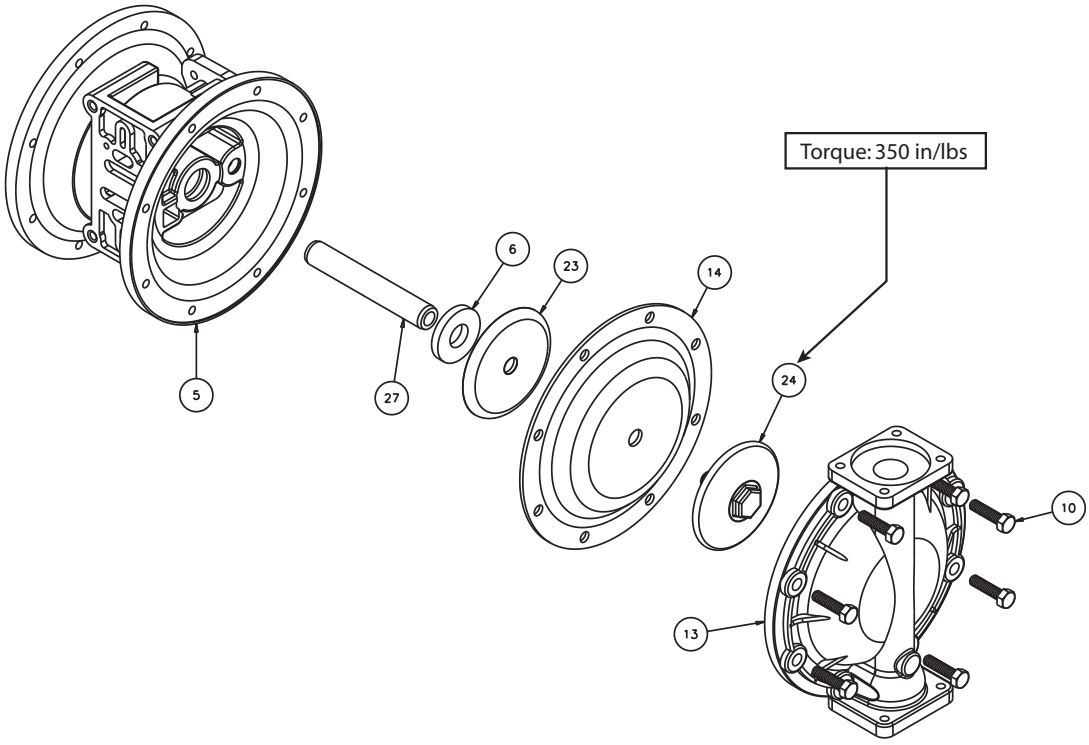

# Diaphragm Servicing

**Step 1:** With manifolds and outer chambers removed, remove diaphragm assemblies from diaphragm rod. **DO NOT** use a pipe wrench or similar tool to remove assembly from rod. Flaws in the rod surface may damage bearings and seal. Soft jaws in a vise are recommended to prevent diaphragm rod damage.

**Step 1.A: NOTE:** Not all inner diaphragm plates are threaded. Some models utilize a through hole in the inner diaphragm plate. If required to separate diaphragm assembly, place assembly in a vise, gripping on the exterior cast diameter of the inner plate. Turn the outer plate clockwise to separate the assembly.

Always inspect diaphragms for wear cracks or chemical attack. Inspect inner and outer plates for deformities, rust scale and wear. Inspect intermediate bearings for elongation and wear. Inspect diaphragm rod for wear or marks.
Clean or repair if appropriate. Replace as required.

**Step 2:** Reassembly: There are two different types of diaphragm plate assemblies utilized throughout the Sandpiper product line: Outer plate with a threaded stud, diaphragm, and a threaded inner plate.

Outer plate with a threaded stud, diaphragm, and an inner plate with through hole. Secure threaded inner plate in a vise. Ensure that the plates are being installed with the outer radius against the diaphragm.

**Step 3:** Lightly lubricate, with a compatible material, the inner faces of both outer and inner diaphragm plates when using on non Overlay diaphragms (For EPDM water is recommended). No lubrication is required.

**Step 4:** Push the threaded outer diaphragm plate through the center hole of the diaphragm. **Note:** Most diaphragms are installed with the natural bulge out towards the fluid side. S05, S07, and S10 non–metallic units are installed with the natural bulge in towards the gas side.

**Step 5:** Thread or place, outer plate stud into the inner plate. For threaded inner plates, use a torque wrench to tighten the assembly together. Torque values are called out on the exploded view.

Repeat procedure for second side assembly. Allow a minimum of 15 minutes to elapse after torquing, then re-torque the assembly to compensate for stress relaxation in the clamped assembly.

**Step 6:** Thread one assembly onto the diaphragm rod with sealing washer (when used) and bumper.

**Step 7:** Install diaphragm rod assembly into pump and secure by installing the outer chamber in place and tightening the capscrews.

**Step 8:** On opposite side of pump, thread the remaining assembly onto the diaphragm rod. Using a torque wrench, tighten the assembly to the diaphragm rod. Align diaphragm through bolt holes, always going forward past the recommended torque. Torque values are called out on the exploded view. **NEVER** reverse to align holes, if alignment cannot be achieved without damage to diaphragm, loosen complete assemblies, rotate diaphragm and reassemble as described above.



**⚠ IMPORTANT**



***Read these instructions completely, before installation and start-up. It is the responsibility of the purchaser to retain this manual for reference. Failure to comply with the recommendations stated in this manual will damage the pump, and void factory warranty.***

# PUMPING HAZARDOUS LIQUIDS

When a diaphragm fails, the pumped liquid or fumes enter the natural gas end of the pump. Fumes are exhausted into the surrounding environment. When pumping hazardous or toxic materials, the exhaust gas must be piped to an appropriate area for safe disposal. See illustration #1 at right.

This pump can be submerged if the pump materials of construction are compatible with the liquid being pumped. The natural gas exhaust must be piped above the liquid level. See illustration #2 at right. Piping used for the gas exhaust must not be smaller than 1" (2.54 cm) diameter. Reducing the pipe size will restrict natural gas flow and reduce pump performance. When the pumped product source is at a higher level than the pump (flooded suction condition), pipe the exhaust gas higher than the product source to prevent siphoning spills. See illustration #3 at right.

### PIPING THE NATURAL GAS EXHAUST

The following steps are necessary to pipe the exhaust gas away from the pump.The gas distribution valve assembly (item 1) has 1" NPT threads for piped exhaust.

**IMPORTANT INSTALLATION NOTE:** The manufacturer recommends installing a flexible conductive hose or connection between the pump and any rigid plumbing. This reduces stresses on the molded threads of the natural gas exhaust port. Failure to do so may result in damage to the natural gas distribution valve body.

Any piping or hose connected to the pump's natural gas exhaust port must be conductive and physically supported. Failure to support these connections could also result in damage to the valve body.

If a high pressure gas spike is possible through the exhaust line, a pressure regulator is required in the exhaust piping.

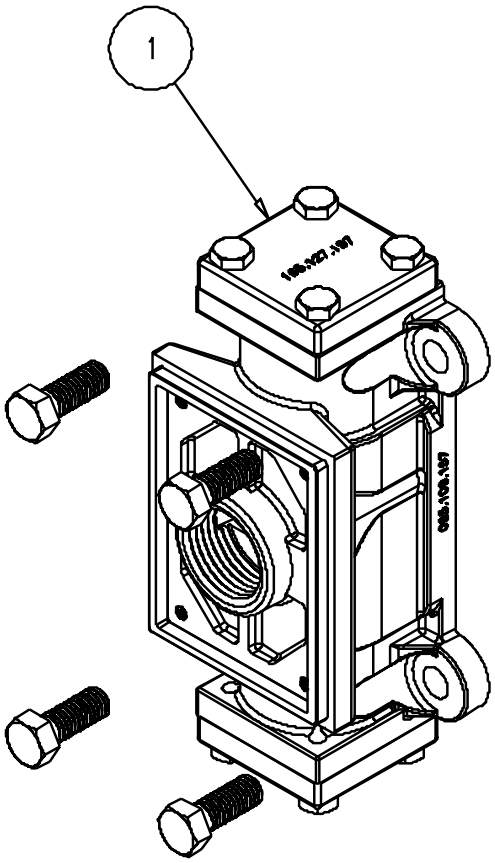


### NATURAL GAS EXHAUST ILLUSTRATION

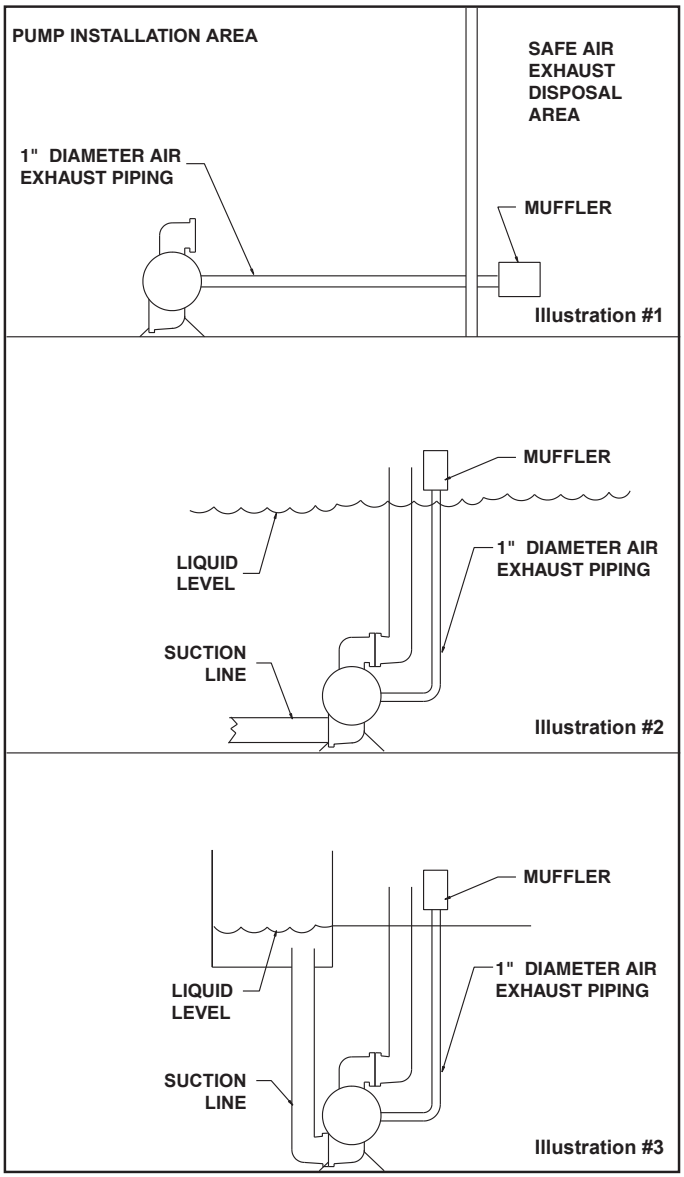


**⚠ WARNING**



***Natural gas exhaust is to be vented to low pressure safe location using conductive Nitrile rubber hose or metal piping in accordance with local fire and environmental codes, or an industry or nationally recognized code having jurisdiction over specific installations, and/or CAN/CGA B149, Installation Codes.***

# 5 - YEAR Limited Product Warranty

*Warren Rupp, Inc. ("Warren Rupp") warrants to the original end-use purchaser that no product sold by Warren Rupp that bears a Warren Rupp brand shall fail under normal use and service due to a defect in material or workmanship within five years from the date of shipment from Warren Rupp's factory. Warren Rupp brands include Warren Rupp®,SANDPIPER®, SANDPIPER Signature Series™, MARATHON®, Porta-Pump®, SludgeMaster™ and Tranquilizer®.*

*The use of non-OEM replacement parts will void (or negate) agency certifications, including CE, ATEX, CSA, 3A and EC1935 compliance (Food Contact Materials). Warren Rupp, Inc. cannot ensure nor warrant non-OEM parts to meet the stringent requirements of the certifying agencies.*

*~ See complete warranty at https://www.sandpiperpump.com/*

SANDPIPER®

# EC Declaration of Conformity

**Manufacturer:**
**Warren Rupp, Inc.**
**800 N. Main Street**
**Mansfield, Ohio, 44902 USA**

Certifies that Air-Operated Double Diaphragm Pump Models: DSB Series, DMF Series, G Series, HDB Series, HDF Series, HP Series, F Series, MS Series, S Series, SL Series, SP Series, SSB Series, T Series, U1F Series, WR Series; High Pressure Pump Models: EH Series, GH Series, SH Series; Submersible Pump Models: SMA3 Series, SPA Series; and Surge Dampener/ Suppressor Models: DA Series, TA Series comply with the European Community Directive 2006/42/EC on Machinery, according to Annex VIII. This product has used Harmonized Standard EN809:2012, Pumps and Pump Units for Liquids - Common Safety Requirements, to verify conformance.

October 3, 2022
DATE/APPROVAL/TITLE:

Technical File on record with:
DEKRA Certification B.V.
Meander 1051
6825 MJ Arnhem
The Netherlands

Signature of authorized person

Dennis Hall
Printed name of authorized person

Engineering Manager
Title

IDEX

CE

SANDPIPER®

# EC Declaration of Conformity

**Manufacturer:**
**Warren Rupp, Inc.**
**800 N. Main Street**
**Mansfield, Ohio, 44902 USA**

Certifies that Air-Operated Double Diaphragm Pump Models: DSB Series, DMF Series, G Series, HDB Series, HDF Series, HP Series, F Series, MS Series, S Series, SL Series, SP Series, SSB Series, T Series, U1F Series, WR Series; High Pressure Pump Models: EH Series, GH Series, SH Series; Submersible Pump Models: SMA3 Series, SPA Series; and Surge Dampener/ Suppressor Models: DA Series, TA Series comply with the United Kingdom Statutory Instruments 2008 No. 1597, The Supply of Machinery (Safety) Regulations 2008, according to Annex VIII. This product has used Designated Standard EN809:2012, Pumps and Pump Units for Liquids - Common Safety Requirements, to verify conformance.

October 17, 2022
DATE/APPROVAL/TITLE:

Technical File on record with:
DEKRA Certification UK Limited
Stokenchurch House
Oxford Road
Stokenchurch
HP14 3SX

Signature of authorized person

Dennis Hall
Printed name of authorized person

Engineering Manager
Title

IDEX

UK CA

SANDPIPER®

# ATEX

# EU Declaration of Conformity

**Manufacturer:**
Warren Rupp, Inc.
A Unit of IDEX Corporation
800 North Main Street
Mansfield, OH 44902 USA

This declaration of conformity is issued under the sole responsibility of the manufacturer. Warren Rupp, Inc. declares that Air Operated Double Diaphragm Pumps (AODD) and Surge Suppressors listed below comply with the requirements of Directive **2014/34/EU** and applicable harmonized standards.

Harmonized Standards:
- EN ISO 80079-36: 2016
- EN ISO 80079-37: 2016
- EN 60079-25: 2010

1. AODD Pumps and Surge Suppressors - Technical File on record with: DEKRA Certification B.V.
Meander 1051
6825 MJ Arnhem
The Netherlands

Hazardous Location Applied:

Ⓔx II 2 G Ex h IIC T5...225°C (T2) Gb
II 2 D Ex h IIIC T100°C...T200°C Db
- Metallic pump models with external aluminum components (DMF Series, EH Series, F Series, G & GH Series, HDB Series, HDF Series, MS Series, S Series, SH Series, SL Series, SPB Series, ST Series, T Series, and U1F Series)
- Conductive plastic pump models with integral muffler (PB1/4 Series, S Series, SL Series, SPE Series)
- Tranquilizer® surge suppressors (TA Series)

Ⓔx II 2 G Ex h IIB T5...225°C (T2) Gb
II 2 D Ex h IIIB T100°C...T200°C Db
- ST Series with sight tubes (VL) and HP Series because of the projected area of non-conductive external components

2. AODD Pumps - EU Type Examination Certificate No.: DEKRA 18ATEX0094X - DEKRA Certification B.V. (0344)
Meander 1051
6825 MJ Arnhem
The Netherlands

Hazardous Location Applied:

Ⓔx I M1 Ex h I Ma
II 1 G Ex h IIC T5...225°C (T2) Ga
II 1 D Ex h IIIC T100°C...T200°C Da
- Metallic pump models with no external aluminum (HDB Series, HDF Series, G Series, S Series, SPB Series)
- Conductive plastic pumps equipped with conductive muffler (S Series, SPE Series)

Ⓔx II 2 G Ex h ia IIC T5 Gb
II 2 D Ex h ia IIIC T100°C Db
- Pump models with ATEX rated pulse output kit option (HDB Series, HDF Series, PB1/4, S Series, SB Series)

Ⓔx II 2 G Ex h mb IIC T5 Gb
II 2 D Ex h mb tb IIIC T100° Db
- Pump model series S05, S1F, S15, S20, S30 equipped with ATEX rated integral solenoid option

➢ See “ATEX Details” page in user’s manual for more information
➢ See “Safety Information” page for conditions of safe use

DATE/APPROVAL/TITLE:
9 NOV 2023

Dennis Hall
Engineering Manager

B

SANDPIPER®

# UKEx

IDEX

# EU Declaration of Conformity

**Manufacturer:**
Warren Rupp, Inc.
A Unit of IDEX Corporation
800 North Main Street
Mansfield, OH 44902 USA

This declaration of conformity is issued under the sole responsibility of the manufacturer.
Warren Rupp, Inc declares that Air Operated Double Diaphragm Pumps (AODD) and Surge Suppressors listed below comply with the requirements of United Kingdom Statutory Instruments **2016 No. 1107** and all the applicable standards.

Designated Standards:

- EN ISO 80079-36: 2016
- EN ISO 80079-37: 2016
- EN 60079-25: 2010

1. AODD Pumps and Surge Suppressors - Technical File on record with: DEKRA Certification UK Limited
Stokenchurch House
Oxford Road
Stokenchurch
HP14 3SX

Hazardous Location Applied:



II 2 G Ex h IIC T5...225°C (T2) Gb
II 2 D Ex h IIIC T100°C...T200°C Db

- Metallic pump models with external aluminum components (DMF Series, EH Series, F Series, G & GH Series, HDB Series, HDF Series, MS Series, S Series, SH Series, SL Series, SPB Series, ST Series, T Series, and U1F Series)
- Conductive plastic pump models with integral muffler (PB1/4 Series, S Series, SL Series, SPE Series)
- Tranquilizer® surge suppressors (TA Series)



II 2 G Ex h IIB T5...225°C (T2) Gb
II 2 D Ex h IIIB T100°C...T200°C Db

- ST Series with sight tubes (VL) and HP Series because of the projected area of non-conductive external components

➢ See “ATEX Details” page in user’s manual for more information
➢ See “Safety Information” page for conditions of safe use

DATE/APPROVAL/TITLE:
9 NOV 2023

Dennis Hall
Engineering Manager