# G30 METALLIC PUMP
# TECHNICAL DATA SHEET

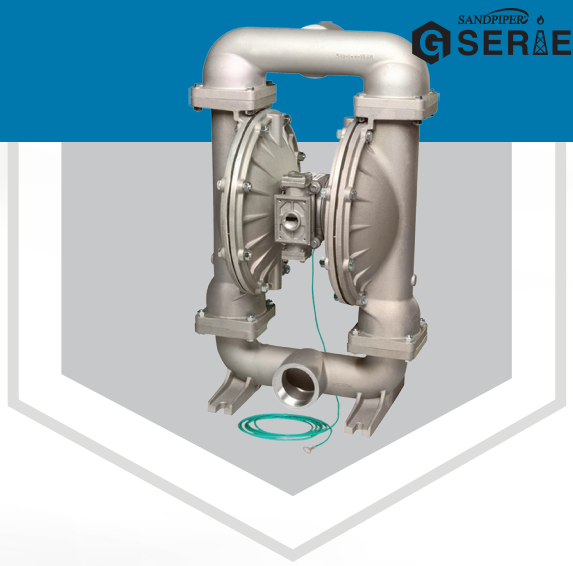


## SERIES

### NATUAL GAS PUMPS

CSA certified to ANSI LC6 standard and Canadian Technical Letter No. R-14 for operation using sweet or sour natural gas

## PERFORMANCE

### SUCTION / DISCHARGE PORT SIZE

- 3" NPT or 3" BSP Tapered
- 3" ANSI Flange or 80 DIN Flange

### CAPACITY

- 0 to 285 gallons per minute (0 to 1079 LPM)

### AIR DISTRIBUTION VALVE

- No-lube, no-stall design

### SOLIDS-HANDLING

- Up to .38 in. (9.65mm)

### HEADS UP TO

- 100 psi or 231 ft. of water (7 bar or 70 meters)

### MAXIMUM OPERATING PRESSURE

- 100 psi (7 bar)

### DISPLACEMENT/STROKE

- .94 Gallon / 3.56 liter

### WEIGHTS

- Aluminum 116 lbs. (53kg)
- Stainless Steel 194 lbs. (87kg)

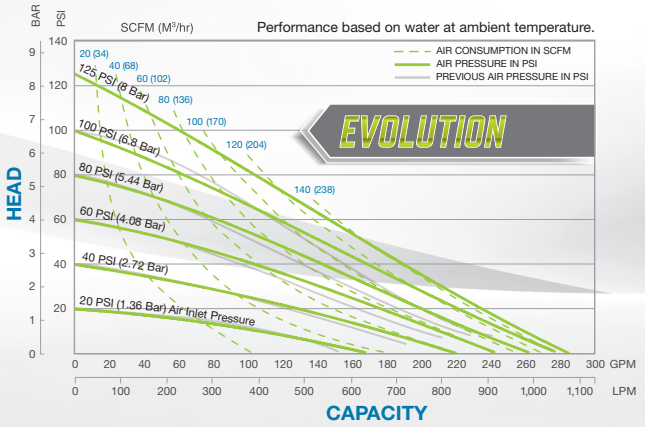


## DIMENSIONS

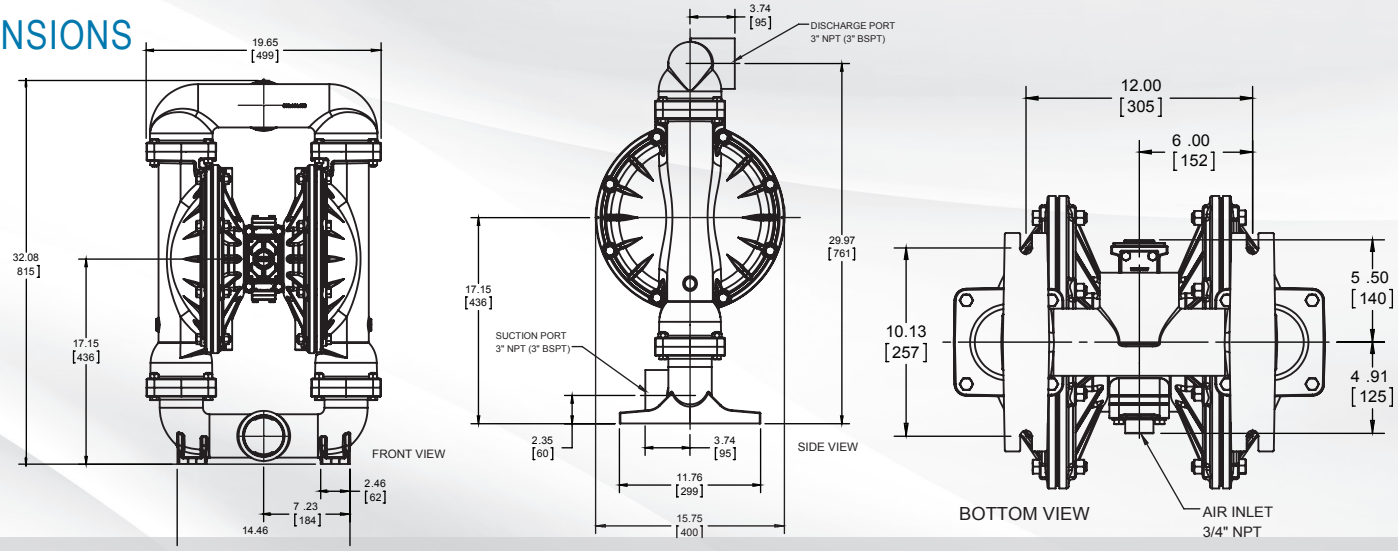


### 5 YEAR LIMITED PRODUCT WARRANTY

5 Year Guarantee for defects in material or workmanship. See sandpiperpump.com/content/warranty-certifications for complete warranty, including terms and conditions, limitations and exclusions.

### USE ONLY GENUINE SANDPIPER PARTS

All certification, standards, guarantees & warranties originally supplied with this pump will be invalidated by the use of service parts not identified as "Genuine SANDPIPER Parts."

SANDPIPER®
SANDPIPERPUMP.COM

Warren Rupp, Inc. • A Unit of IDEX Corporation
800 N. Main St., Mansfield, Ohio 44902 USA
Telephone 419.524.8388 • Fax 419.522.7867

ABS TYPE APPROVED PRODUCT
Member of Hydraulic Institute
SAI GLOBAL ISO 9001 Certified ISO 14001 Certified

# EXPLANATION OF PUMP NOMENCLATURE

**Your Model #:** G _____ _____ _____ _____ _____ _____ _____ _____ _____ _____ _____
*(fill in from pump nameplate)*

| Pump Brand | Pump Size | Check Valve | Design Level | Wetted Material | Diaphragm/ Check Valve | Check Valve Seat | Non-Wetted Material | Porting Options | Pump Style | Muffler Options | Pump Options |
|---|---|---|---|---|---|---|---|---|---|---|---|
| **Model #:** G | XX | X | X | X | X | X | X | X | X | X | XX |

### PUMP BRAND
**G** Gas Operated

### PUMP SIZE
**30** 3”

### CHECK VALVE TYPE
**B** Ball

### DESIGN LEVEL
**1** Design Level

### WETTED MATERIAL
**S** Stainless Steel
**A** Aluminum

### DIAPHRAGM/CHECK VALVE MATERIALS
**B** Nitrile/Nitrile
**T** PTFE -Nitrile/PTFE
**5** Nitrile/PTFE

### CHECK VALVE SEAT
**B** Nitrile
**T** PTFE
**A** Aluminum
**S** Stainless Steel

### NON-WETTED MATERIAL OPTIONS
**A** Painted Aluminum
**B** Unpainted Aluminum with Stainless Steel Gas Valve
**D** Unpainted Aluminum with Stainless Steel Gas Valve with FKM O-rings
**X** Unpainted Aluminum
**0** Unpainted Aluminum/FKM Elastomers
**V** Unpainted Aluminum/FKM Elastomers
**S** Stainless Steel/ S02/304 SS Hardware
**T** Stainless Steel/ 316 Stainless Hardware
**7** Painted Stainless Steel
**8** Stainless Steel/FKM Elastomers
**9** Painted Stainless Steel/FKM Elastomers

### PORTING OPTIONS
**N** NPT Threads
**B** BSP (Tapered) Threads
**A** 150# Raised Face 3” ANSI Flange (Integral Manifold)
**D** 80 DIN Flange (Integral Manifold)

### PUMP STYLE
**S** Standard

### MUFFLER OPTIONS
**X** No Muffler Permitted *

# MATERIALS

| **Material Profile:** ⚠ CAUTION! Operating temperature limitations are as follows: | Operating Temperatures: Max. | Min. |
|---|---|---|
| **CONDUCTIVE ACETAL:** Tough, impact resistant, ductile. Good abrasion resistance and low friction surface. Generally inert, with good chemical resistance except for strong acids and oxidizing agents. | 190°F 88°C | -20°F -29°C |
| **EPDM:** Shows very good water and chemical resistance. Has poor resistance to oils and solvents, but is fair in ketones and alcohols. | 280°F 138°C | -40°F -40°C |
| **FKM (FLUOROCARBON):** Shows good resistance to a wide range of oils and solvents; especially all aliphatic, aromatic and halogenated hydrocarbons, acids, animal and vegetable oils. Hot water or hot aqueous solutions (over 70°F(21°C)) will attack FKM. | 350°F 177°C | -40°F -40°C |
| **HYTREL®:** Good on acids, bases, amines and glycols at room temperatures only. | 220°F 104°C | -20°F -29°C |
| **NEOPRENE:** All purpose. Resistance to vegetable oils. Generally not affected by moderate chemicals, fats, greases and many oils and solvents. Generally attacked by strong oxidizing acids, ketones, esters and nitro hydrocarbons and chlorinated aromatic hydrocarbons. | 200°F 93°C | -10°F -23°C |
| **NITRILE:** General purpose, oil-resistant. Shows good solvent, oil, water and hydraulic fluid resistance. Should not be used with highly polar solvents like acetone and MEK, ozone, chlorinated hydrocarbons and nitro hydrocarbons. | 190°F 88°C | -10°F -23°C |
| **NYLON:** 6/6 High strength and toughness over a wide temperature range. Moderate to good resistance to fuels, oils and chemicals. | 180°F 82°C | 32°F 0°C |
| **POLYPROPYLENE:** A thermoplastic polymer. Moderate tensile and flex strength. Resists stong acids and alkali. Attacked by chlorine, fuming nitric acid and other strong oxidizing agents. | 180°F 82°C | 32°F 0°C |
| **PVDF:** (Polyvinylidene Fluoride) A durable fluoroplastic with excellent chemical resistance. Excellent for UV applications. High tensile strength and impact resistance. | 250°F 121°C | 0°F -18°C |
| **SANTOPRENE®:** Injection molded thermoplastic elastomer with no fabric layer. Long mechanical flex life. Excellent abrasion resistance. | 275°F 135°C | -40°F -40°C |
| **UHMW PE:** A thermoplastic that is highly resistant to a broad range of chemicals. Exhibits outstanding abrasion and impact resistance, along with environmental stress-cracking resistance. | 180°F 82°C | -35°F -37°C |
| **URETHANE:** Shows good resistance to abrasives. Has poor resistance to most solvents and oils. | 150°F 66°C | 32°F 0°C |
| **VIRGIN PTFE:** (PFA/TFE) Chemically inert, virtually impervious. Very few chemicals are known to chemically react with PTFE; molten alkali metals, turbulent liquid or gaseous fluorine and a few fluoro-chemicals such as chlorine trifluoride or oxygen difluoride which readily liberate free fluorine at elevated temperatures. | 220°F 104°C | -35°F -37°C |

Maximum and Minimum Temperatures are the limits for which these materials can be operated. Temperatures coupled with pressure affect the longevity of diaphragm pump components. Maximum life should not be expected at the extreme limits of the temperature ranges.

## Metals:

**ALLOY C:** Equal to ASTM494 CW-12M-1 specification for nickel and nickel alloy.

**STAINLESS STEEL:** Equal to or exceeding ASTM specification A743 CF-8M for corrosion resistant iron chromium, iron chromium nickel and nickel based alloy castings for general applications. Commonly referred to as 316 Stainless Steel in the pump industry.

For specific applications, always consult the Chemical Resistance Chart.

**NOTE: See service manual for ATEX details.**

SANDPIPER®
SANDPIPERPUMP.COM
Warren Rupp, Inc. • A Unit of IDEX Corporation
800 N. Main St., Mansfield, Ohio 44902 USA
Telephone 419.524.8388 • Fax 419.522.7867