CALL TOLL FREE 877-742-2878 FOR SALES AND SUPPORT
RETURN TO BurtProcess.com

Signet 2540 Stainless Steel High Performance Paddlewheel Flow Sensor



Standard Sensor



Hot-Tap Sensor

Features

- **Operating range 0.1 to 6 m/s (0.3 to 20 ft/s)**
- **Field replaceable electronics**
- **Non-magnetic RF detection**
- **Standard NPT or ISO process connections**
- **Hot-tap versions for installation/service without system shutdown**
- **For pipe sizes up to DN900 (36 in.)**
- **Adjustable sensor - one size for entire pipe range**
- **7.6 m (25 ft) cable**

The Signet 2540 Paddlewheel Flow Sensor offers the strength and corrosion resistance of stainless steel for liquid applications with low velocity measurements. Unique internal circuitry eliminates the need for magnets in the process fluid, enabling flow measurement of 0.1 to 6 m/s (0.3 to 20 ft/s) while maintaining the advantages of insertion sensor design. Ultraflon 500C bearings and Tungsten Carbide pin provide exceptional wear resistance.

The Signet 2540 offers field replaceable electronics and transient voltage suppression (TVS) to provide greater immunity to large voltage disturbances (i.e. lightning) sometimes encountered in field wiring. Sensors can be installed in DN40 to DN600 (1½ to 24 in.) pipes using the 1½ in. or ISO 7/1-R 1.5 threaded process connection.

The sensors are also offered in a hot-tap configuration with a bleed valve service without process shutdown in pipes up to DN900 (36 in.). Both styles of sensors must be used in full pipes and can be used in low pressure systems.

Applications

- **HVAC**
- **Turf Irrigation**
- **Cooling Systems**
- **Filtration Systems**
- **Water Distribution**
- **Leak Detection**
- **Pump Protection**
- **Clarified Effluent Totalization**
- **Ground Water Remediation**
- **Gravity Feed Line**

Specifications

General			
Operating Range	0.1 to 6 m/s	0.3 to 20 ft/s	
Pipe Size Range	Standard Version	DN40 to DN600	1½ to 24 in.
	Hot-Tap Version	DN40 to DN900	1½ to 36 in.
Sensor Fitting Options	1½ in. NPT threads	ISO 7/1-R 1.5 threads	
Linearity	±1% of full range		
Repeatability	±0.5% of full range		
Min. Reynolds Number Required	4500		
Wetted Materials			
Body	316 stainless steel (1.4401)		
Fitting	316 stainless steel (1.4401)		
Fitting O-rings	FKM, optional EPR (EPDM)		
Rotor	17-4PH-1 Stainless Steel		
Rotor Pin	Tungsten Carbide GRP 1 (standard) stainless steel (optional)		
Retainers (2)	316 stainless steel (1.4401)		
Rotor Bearings (2)	Carbon fiber reinforced PTFE		
Electrical			
Frequency	49 Hz per m/s nominal	15 Hz per ft/s nominal	
Power	5 to 24 VDC ±10%, regulated, 1.5 mA max.		
Output Type	Open collector, sinking, max 10.0 mA		
Cable Length	7.6 m (25 ft), can be extended up to 305 m (1,000 ft)		
Cable Type	2-conductor twisted-pair with shield, 22 AWG		
Max. Temperature/Pressure Rating			
Sensor with standard FKM sensor fitting O-rings	17 bar @ 82 °C	250 psi @ 180 °F	
Sensor with optional EPR (EPDM) sensor fitting O-rings	17 bar @ 100 °C	250 psi @ 212 °F	
Operating Temperature	-18 °C to 100 °C	0 °F to 212 °F	
Shipping Weight			
	3-2540-1/-2/-1S/-2S	1.79 kg	3.9 lb
	3-2540-3/-4/-3S/-4S	2.15 kg	4.7 lb
Standards and Approvals			
	CE, FCC		
	RoHS compliant, China RoHS		
	Manufactured under ISO 9001 for Quality and ISO 14001 for Environmental Management and OHSAS 18001 for Occupational Health and Safety		

See Temperature and Pressure graphs for more information.

Dimensions

2540 High Performance Flow Sensor for 1½ to 24 in. pipes

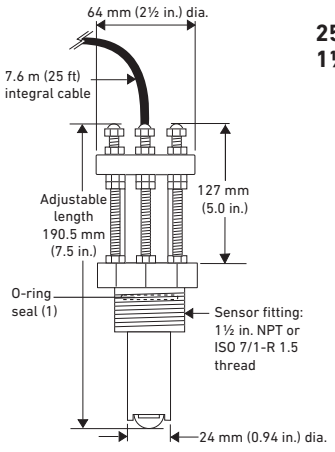

2540 Hot-Tap for 1½ to 36 in. pipes

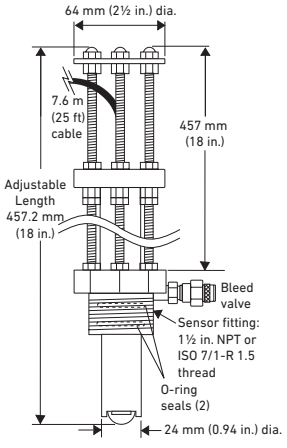

System Overview

Panel Mount	Pipe, Tank, Wall Mount	Field (Integral) Mount	Automation System
Signet Instruments - 8900 - 9900 - 9900-1BC - 9950	Signet Instruments - 9900-1P with Rear Enclosure - 9900-1BC with Rear Enclosure - 9900 with 3-8050-1 Universal Mount Kit - 9950 with 3-8050-1 Universal Mount Kit	Signet Instruments - 9900-1 with 3-8050-1 Universal Mount Kit	- 0486 Profibus Concentrator and Customer Supplied Programmable Logic Controller or - Programmable Automation Controll
Signet 2536PVC, Standard, Wet-Tap or 8512 Integral Mount Flow Sensors			
Signet Fittings			All sold separately

Application Tips

- For systems with components of more than one material, the maximum temperature/pressure specification must always be referenced to the component with the lowest rating.
- Use the Conduit Adapter Kit to protect the cable-to-sensor connection when used in outdoor environments.
- Sensor electronics can be easily replaced by 3-2541.260-1 or 3-2541.260-2.

Temperature/Pressure Graphs

Note:
The pressure/temperature graphs are specifically for the Signet sensor. During system design the specifications of all components must be considered. In the case of a metal piping system, a plastic sensor will reduce the system specification. When using a PVDF sensor in a PVC piping system, the fitting will reduce the system specification.

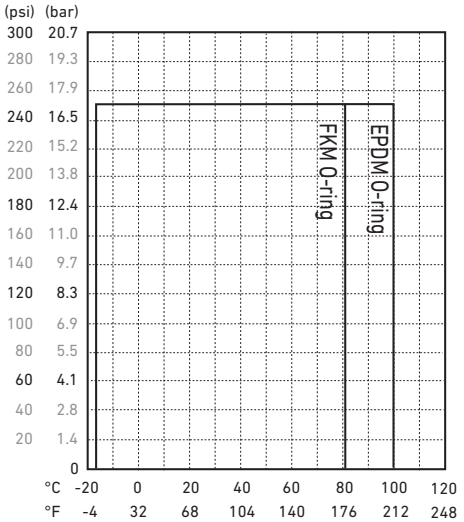

Please refer to Wiring, Installation, and Accessories sections for more information.

Ordering Information

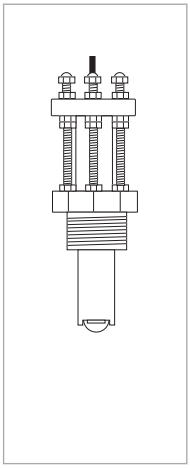

Mfr. Part No.	Code	Mounting Option	Rotor Pin Material
Stainless Steel High Performance Flow Sensor with Removable Electronics			
3-2540-1	**198 840 035**	1½ in. NPT thread	Tungsten Carbide
3-2540-2	**198 840 036**	1½ in. ISO thread	Tungsten Carbide
3-2540-3	**198 840 037**	1½ in. NPT thread, Hot-Tap design*	Tungsten Carbide
3-2540-4	**198 840 038**	1½ in. ISO thread, Hot-Tap design*	Tungsten Carbide
3-2540-1S	**159 001 501**	1½ in. NPT thread	316 Stainless Steel
3-2540-2S	**159 001 502**	1½ in. ISO thread	316 Stainless Steel
3-2540-3S	**159 001 503**	1½ in. NPT thread, Hot-Tap design*	316 Stainless Steel
3-2540-4S	**159 001 504**	1½ in. ISO thread, Hot-Tap design*	316 Stainless Steel

*Must use 3-1500.663 Hot-Tap installation tool (ordered separately)

Ordering Notes
Installation fittings and Hot-Tap valves are customer supplied.

Accessories and Replacement Parts

Mfr. Part No.	Code	Description
3-1500.663	**198 820 008**	Hot-Tap Installation Tool (see Installation for more info)
1220-0021	**198 801 000**	O-ring, FKM (2 required per sensor)
1224-0021	**198 820 006**	O-ring, EPR (EPDM) (2 required per sensor)
1228-0021	**198 820 007**	O-ring, FFKM (2 required per sensor)
3-2540.320	**198 820 040**	Rotor Kit, 2540 PEEK® Bearing (old version)
3-2540.321	**159 000 623**	Rotor Kit, 2540 Tungsten Carbide Pin (new version since January 1, 2000)
3-2540.322	**159 000 864**	Rotor Kit, stainless steel pin and rotor
P52504-3	**159 000 866**	Rotor Pin, Tungsten Carbide
P52504-4	**159 000 867**	Rotor Pin, 316 SS
P52503	**198 820 013**	Bearing, carbon reinforced PTFE
P52527	**159 000 481**	Retainers, SS (1.4401)
3-2541.260-1	**159 000 849**	Standard replacement electronics module
3-2541.260-2	**159 000 850**	Hot-Tap replacement electronics module
5523-0222	**159 000 392**	Cable (per foot), 2 cond. w/shield, 22 AWG
P51589	**159 000 476**	Conduit Adapter Kit
P31934	**159 000 466**	Conduit Cap

3-2540.099 Rev H (02/20)
© Georg Fischer Signet LLC
3401 Aero Jet Avenue, El Monte, CA 91731-2882 U.S.A. • Tel. (626) 571-2770 • Fax (626) 573-2057 • www.gfsignet.com • e-mail: signet.ps@georgfischer.com
Specifications subject to change without notice. All rights reserved. All corporate names and trademarks stated herein are the property of their respective companies.