CALL TOLL FREE 877-742-2878 FOR SALES AND SUPPORT
RETURN TO BurtProcess.com

+GF+

English

Signet 2552 Metal Magmeter

3-2552.090 Rev. 8 10/19

Operating Instructions

3-2552-2 3-2552-3



- English
- Deutsch
- Français
- Español
- Italiano
- Português
- 中文

Description

The Signet 2552 Metal Magmeter from Georg Fischer features all-stainless steel construction. The PVDF nosepiece and FPM O-rings are the only other wetted materials.

The 2552 installs quickly into standard 1¼ in. or 1½ in. pipe outlets, and is adjustable to fit pipes from DN50 to DN2550 (2 to 102 inches). Two sensor lengths allow maximum flexibility to accommodate a variety of hardware configurations, including ball valves for hot-tap installations.

When equipped with the frequency output, the 2552 is compatible with any Signet flow instrument, while the S³L Digital output enables multi-channel compatibility with the Signet 8900 Multi-Parameter Flow Controller. Select the blind 4 to 20 mA current output to interface directly with dataloggers, PLCs or telemetry systems.

Key features include Empty Pipe Detection, LED-assisted troubleshooting, and Bi-Directional span capability (in 4 to 20 mA models).

The Signet 3-0252 Configuration Tool is available to customize every performance feature in the 2552 so it can be adapted to the user's application requirements.

Table of Contents

Warranty Information 2
Product Registration 2
Safety Information 2
Environmental Recomendations 2
Specifications 2-3
Dimensions 4
Overview 4
Selecting a Location 4
General Installation 4
Vertical Installation 5
Horizontal Installation 5
Sensor Conditioning 5
Grounding 5
Preparing for Installation 6
H-Dimension 6
Magmeter Installation 7-8
Frequency Output Wiring 9
Digital (S³L) Output Wiring 9-10
4 to 20 mA Loop Output Wiring 10
Calibration Data 11-12
Technical Support Information 13
Troubleshooting 14
Maintenance 14
Sensor Selection Guide 15
Ordering Information 16

Warranty Information

Refer to your local Georg Fischer Sales office for the most current warranty statement.

All warranty and non-warranty repairs being returned must include a fully completed Service Form and goods must be returned to your local GF Sales office or distributor.
Product returned without a Service Form may not be warranty replaced or repaired.

Signet products with limited shelf-life (e.g. pH, ORP, chlorine electrodes, calibration solutions; e.g. pH buffers, turbidity standards or other solutions) are warranted out of box but not warranted against any damage, due to process or application failures (e.g. high temperature, chemical poisoning, dry-out) or mishandling (e.g. broken glass, damaged membrane, freezing and/or extreme temperatures).

Product Registration

Thank you for purchasing the Signet line of Georg Fischer measurement products.
If you would like to register your product(s), you can now register online in one of the following ways:

- Visit our website **www.gfsignet.com.**
  Under **Service and Support** click on
  Product Registration Form
- If this is a pdf manual (digital copy), **click here**

Safety Information

1. Depressurize and vent systems without Hot-tap valve prior to installation or removal.
2. Confirm chemical compatibility before use.
3. Do not exceed maximum temperature/pressure specifications.
4. Wear safety goggles or face shield during installation/service.
5. Do not disassemble or alter product construction.
6. Disconnect power before attempting any service or wiring.

	**Caution / Warning / Danger** Indicates a potential hazard. Failure to follow all warnings may lead to equipment damage, injury, or death
	**Electrostatic Discharge (ESD) / Electrocution Danger** Alerts user to risk of potential damage to product by ESD, and/or risk of potential of injury or death via electrocution.
	**Personal Protective Equipment (PPE)** Always utilize the most appropriate PPE during installation and service of Signet products.
	**Pressurized System Warning** Sensor may be under pressure, take caution to vent system prior to installation or removal. Failure to do so may result in equipment damage and/or serious injury.
	**Note / Technical Notes** Highlights additional information or detailed procedure.

Environmental Recommendations

When used properly, this product presents no inherent danger to the environment.
Please follow all appropriate local ordinances when disposing of this or any product with electronic components.

Specifications

Performance
Pipe size range.....DN50 to DN2550 (2 in. to 102 in.)

Flow Range
Minimum.....0.05 m/s (0.15 ft/s)
Maximum.....10 m/s (33 ft/s) for pipes up to DN 1200 (48 in.)
3 m/s (10 ft./s) for pipes over DN 1200 (48 in.)
Linearity.....±(1% reading + 0.01 m/s)
±(1% reading + 0.033 ft/s)
Repeatability.....±0.5% of reading @ 25 °C
Accuracy:
±2% of measured value (in reference conditions where the fluid is water at ambient temperature, the sensor is inserted at the correct depth and there is a fully developed flow profile which is in compliance with ISO 7145-1982 (BS 1042 section 2.2))
Minimum Conductivity .....20 µS/cm

Wetted Materials
Body and Electrodes .....316L Stainless Steel
Insulator.....PVDF
O-rings.....FKM (standard)
Cable .....4-cond + shield, PVC jacket (Fixed cable models) or Water-resistant rubber cable assembly with Turck® NEMA 6P connector

Power Requirements
4 to 20 mA .....24 VDC ± 10%, regulated, 22.1 mA maximum
Frequency.....5 to 24 VDC ± 10%, regulated, 15 mA maximum
Digital (S^3L).....5 to 6.5 VDC, 15 mA maximum
Reverse polarity and short circuit protected

Cable Options
- Fixed 7.6 m (25 ft) cable
- Custom lengths available, contact Georg Fischer Signet signet-specialproduct@georgfischer.com
- Detachable water tight sensor cable with Turck® connector sold separately, two lengths: 4 m (13 ft) or 6 m (19.5 ft)

Current Output (4 to 20 mA): Programmable and reversible
Factory Range.....4 to 20 mA = 0 to 5 m/s
Loop Accuracy.....32 µA max. error (@ 25 °C @ 24 VDC)
Temp. drift.....±1 µA per °C max.
Power supply rejection .....±1 µA per V
Isolation .....Low voltage < 48 VAC/DC from electrodes and auxiliary power
Maximum cable .....300 m (1000 ft)
Max. Loop Resistance.....300 Ω
Error condition .....22.1 mA

Specifications Cont.

Frequency Output

Compatible .....Signet 8900, 9900, 9900-1BC and 9950
Max. Pull-up Voltage.....30 VDC
Short Circuit Protected .....≤ 30 V @ 0 Ω pull-up for one hour
Reverse Polarity .....Protected to -40 V for 1 hour
Overvoltage .....Protected to +40 V for 1 hour
Max. Current Sink.....50 mA, current limited
Maximum cable .....300 m (1000 ft)

Digital (S^3L) Output

Compatible with Signet 8900, 9900, 9950 and 0486
Serial ASCII, TTL level 9600 bps
Maximum cable .....Application dependent (See 8900 manual)

Environmental

- NEMA 4 (IP65) (fixed cable models)
- NEMA 6P (IP68) (Submersible cable models only): Signet recommends maximum 3 m. (10 ft) submersion depth for maximum 10 days continuous submersion.

Standards and Approvals

- CE, RoHS Compliant
- U.S. Patent No.: 7,055,396 BI
- Manufactured under ISO 9001 for Quality, ISO 14001 for Environmental Management and OHSAS 18001 for Occupational Health and Safety.

China RoHS (visit gfsignet.com for details)

This device complies with Part 15 of the FCC rules. Operation is subject to the following two conditions:
(1) This device may not cause harmful interference, and
(2) This device must accept any interference received, including interference that may cause undesired operation.

Warning: For applications with diameters greater than DN1200 (122 cm or 48 inches) with a fluid velocity exceeding 3 m / s (10 ft / s), contact your local sales office for technical assistance.

Temperature Rating

Storage Temperature.....-15 °C to 70 °C (5 °F to 158 °F) in non-icing conditions

Operating Temperature

Ambient .....-15 °C to 70 °C (5 °F to 158 °F) in non-icing conditions
Media.....-15 °C to 85 °C (5 °F to 185 °F)

Max. Operating Pressure

20.7 bar @ 25 °C (300 psi @ 77 °F)

Hot-Tap Installation Requirements

Maximum Pressure.....20.7 bar (300 psi)
Maximum Temp. .....40 °C (104 °F)

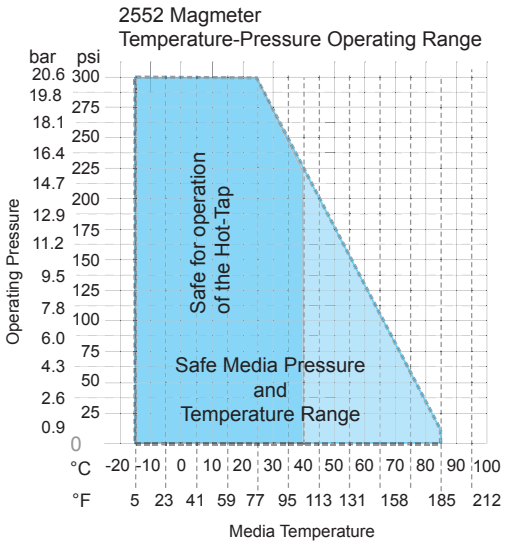

Do not use hot-tap installation where temperatures will exceed 40 °C or if hazardous liquids are present.

Dimensions

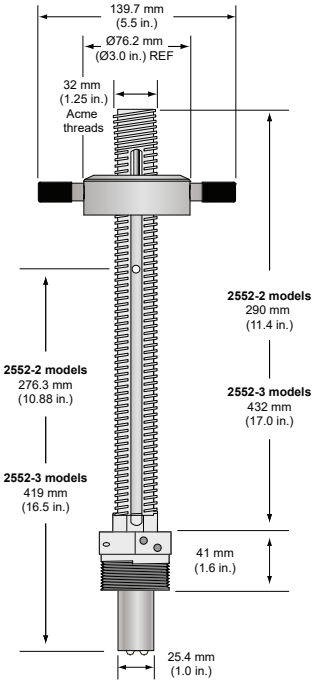

Overview

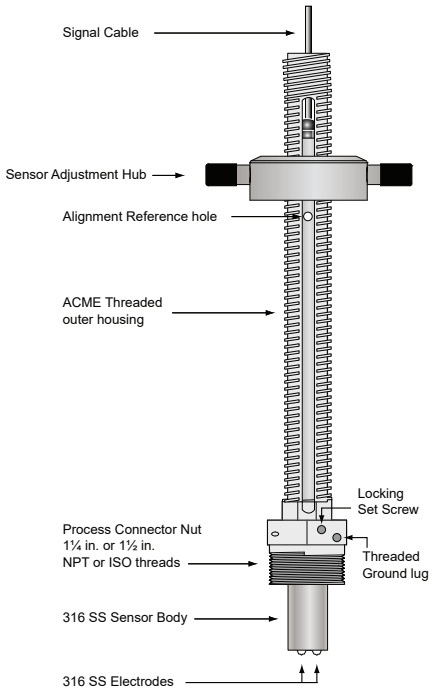

Selecting a Location

- The 2552 requires a fully developed turbulent flow profile for accurate measurement. Selecting the correct location in the piping system is critical to the performance of the magmeter.
- Locate the magmeter where air bubbles will not contact the electrodes.
- Placing the sensor in a vertical section of pipe, with flow going UPHILL is the first choice for this requirement.
- The piping system should be designed to keep the sensor wet at all times.
- In applications where the conductivity of the process liquid is less than 100 µS, magmeters should be allowed to soak in a full pipe for 24 hours before operation.
- Chemical injection systems can temporarily alter the fluid conductivity and cause anomalies in the magmeter measurement.
- To avoid this problem, install the magmeter UPSTREAM of the injection point.

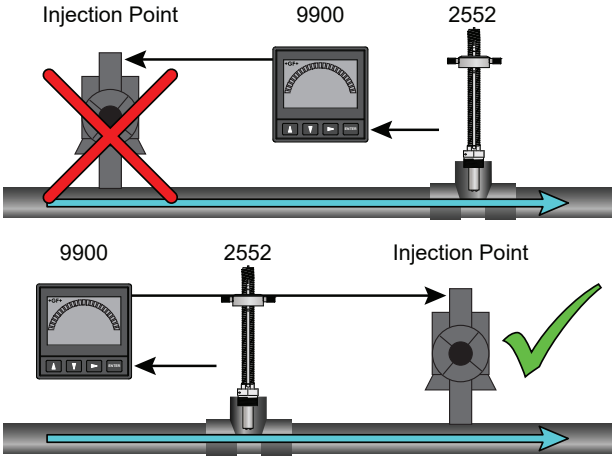

General Installation

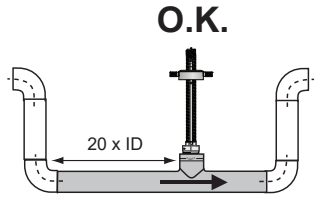

Located the magmeter in a "trap" to prevent air bubbles and to keep the electrodes wetted for best performance.

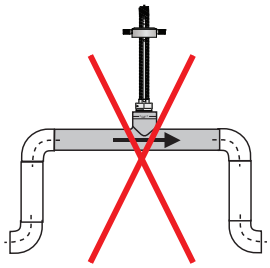

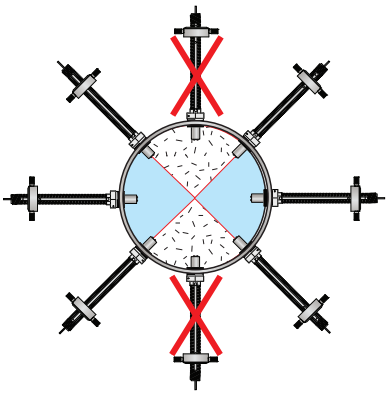

Air pockets and bubbles will travel at the top of a horizontal pipe, so avoid vertical installations.

Sediments and debris that collect at the bottom of a horizontal pipe will interference with the operation.

Vertical Installation

Recommended Installation

Locating the sensor where the flow is upward protects the sensor from exposure to air bubbles and may offset upstream turbulence caused by pipe conditions and other hardware.

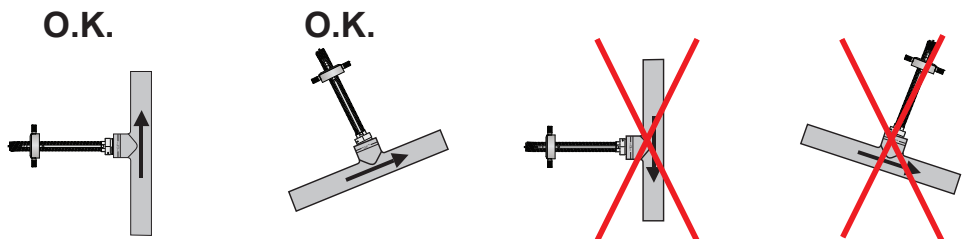

Horizontal Installation

If the magmeter must be mounted in a horizontal section of pipe, take extra precautions to prevent air bubbles from passing over the sensor.

Select a location with sufficient distance of straight pipe immediately upstream of the sensor. The dimensions illustrated here are intended for general guidance. Every piping system has unique characteristics, and requires individual evaluation.

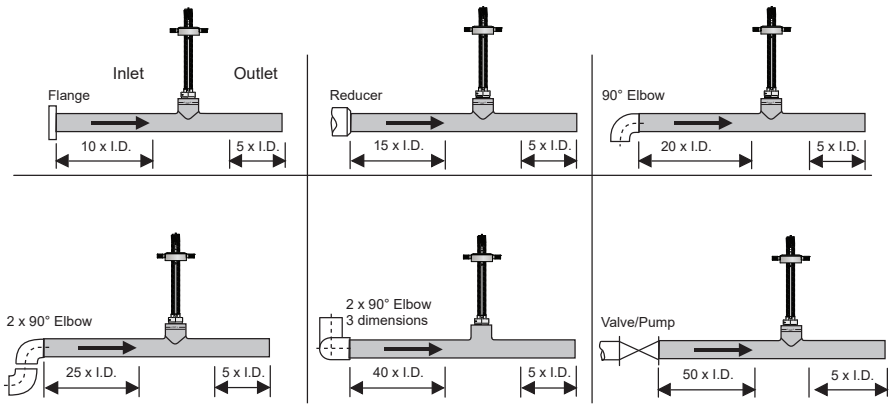

Sensor Conditioning

The Magmeter output signal may be unstable immediately after installation. Allowing the sensor to soak in a full pipe (or in any container of water) for 24 hours will stabilize the performance.

- **Very low conductivity fluids may require a longer conditioning period.**
- **The Magmeter may not operate properly in fluids where the conductivity is less than 20 µS/cm.**

Grounding

The 2552 Magmeter is unaffected by moderate levels of electrical noise, especially if installed in a properly grounded metal piping system. However, in some applications it may be necessary to ground portions of the system to eliminate electrical interference. The grounding requirements will vary with each installation.

One or more of the following steps may be applied if the 2552 Magmeter is affected by electrical noise:

① Connect a wire (14 AWG/2.08 mm² recommended) from the ground terminal screw on the sensor nut directly to a local Earth ground.

② Install fluid grounding devices immediately upstream and downstream of the Magmeter.
Connect the fluid grounds to the Earth ground terminal on the 2552.
Use flanged grounding rings or metal electrodes on plastic pipes, or metal clamps on metal pipes.
Fluid grounds must be in direct contact with the fluid, and as near to the Magmeter as possible.

③ Connect the SHIELD conductor to Earth ground near the instrument.

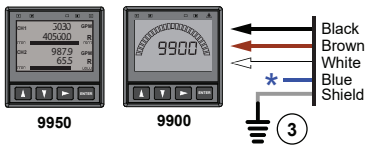

* See page 9 for wiring details.

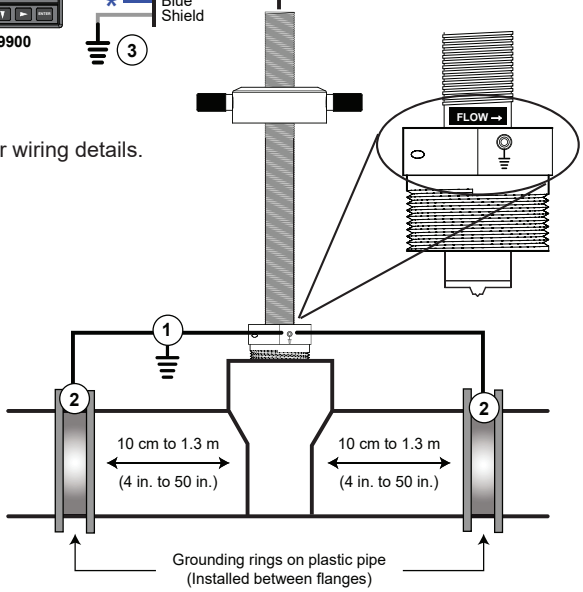

Preparing for Installation

The alignment of the electrodes in the pipe and the insertion depth of the electrodes in relation to the inside diameter of the pipe are critical to the successful operation and calibration of the system. The brass rod that is supplied with the 2552 is used to assist with this requirement.

H-Dimension

The H-dimension is the distance from the TOP OF THE PIPE to the BOTTOM OF THE BRASS ROD.

The tables on pages 11-12 include the H-dimension for two of the most common pipe schedules from DN50 to DN2550 (2 in. to 102 in.). If the pipe is not represented in the tables on pages 11-12, use the procedure below to determine the H-dimension.

The goal of the procedure is to place the Magmeter electrodes 10% inside of the pipe

1. The height from the magmeter electrodes to the alignment rod is:

-2 Versions: 276.3 mm (10.88 in.)
-3 Versions: 419.0 mm (16.50 in.)

2. Subtract the wall thickness of the pipe:

- Wall Thickness: -_____ mm (_____ in.)

3. Subtract 10% of the pipe inside diameter:

- 10% of pipe id: -_____ mm (_____ in.)

4. The result is the H-dimension. Record the result here for reference at the installation site:

= H dimension: =_____ mm (_____ in.)

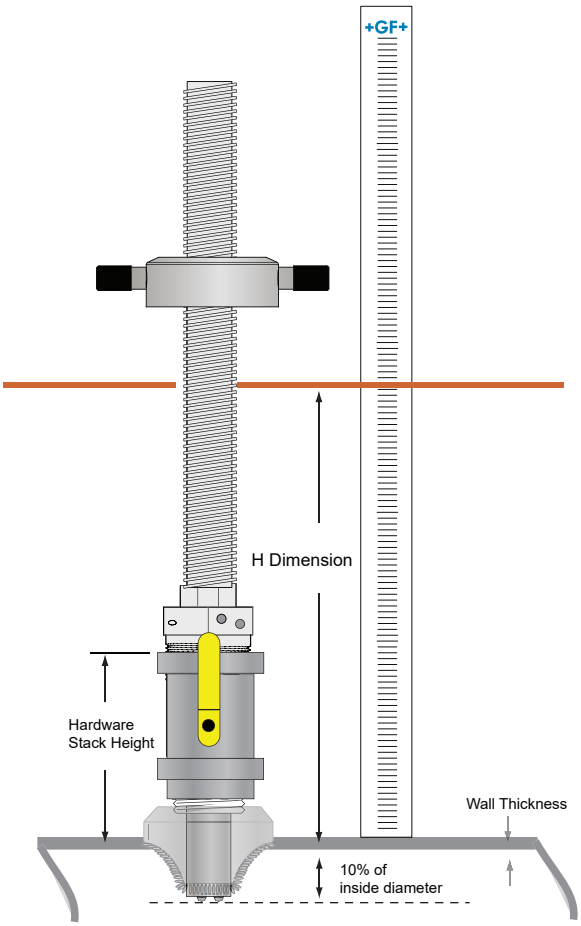

Hardware stack height is important
The H-dimension represents the total height available for the installation hardware.

If there is insufficient clearance to accommodate the hardware, select a longer 2552 Magmeter or modify the hardware to reduce the stack height.

Magmeter Installation

The following items are required to properly install the Magmeter:

Supplied with 2552 Magmeter:

- Ruler
- Brass alignment rod
- H-dimension value for your pipe (See pages 6)
- Hex wrench
- 2 clamp rings
- Grounding screw
- Anti-Seize Lubricant for stainless steel

Not supplied with the 2552 Magmeter:

- Female pipe fitting (weld-on or saddle) with:
  - 1¼ in. NPT or ISO 7/Rc 1¼ threads (2552-2)
  - 1½ in. NPT or ISO 7/Rc 1½ threads (2552-3)
- 32 mm (1¼ in.) or 40 mm (1½ in.) ball valve (for hot tap installations)
- 32 mm (1¼ in.) or 40 mm (1½ in.) diameter drill
- 32 mm (1¼ in.) pipe nipple
- Pipe thread sealant suitable for application
- Pipe wrench

1. Determine the H-dimension for the pipe

- The tables on pages 11-12 list the H-dimension metal pipe per ANSI 36.10 and ANSI 36.19.
- Use the procedure on page 6 to determine the H-dimension for other types of pipe.

2. Prepare the pipe

a. Cut a 32 mm (1¼ in.) opening in the pipe.

b. Install a 32 mm (1¼ in.) for 2552-2, or 40 mm (1½ in.) for 2552-3 outlet onto the pipe.

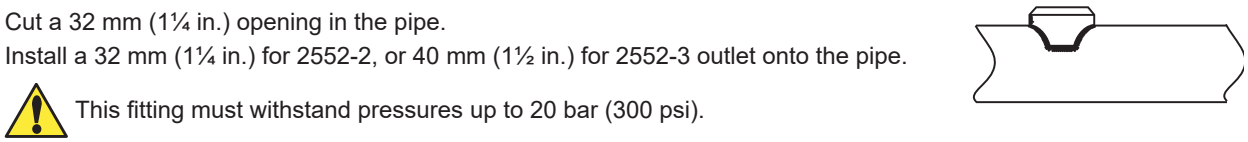

This fitting must withstand pressures up to 20 bar (300 psi).

For Hot-tap installations:

- Thread a matching pipe nipple and ball valve into the outlet.
- Use a suitable paste or sealing tape to provide a leakproof connection.

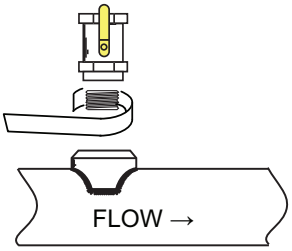

Hot- tap drilling requires special tools and skills.
This task should only be performed by qualified personnel.

For Ball Valve installations:

Position the ball valve handle so it is parallel to the pipe. This will prevent the valve handle from interfering with the adjustment and alignment of the magmeter.

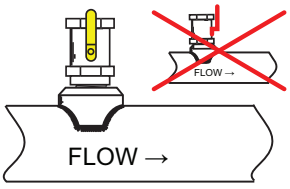

Remember to tilt the magmeter to avoid air bubbles (see General Installation, page 4).

3. Install the Magmeter into the pipe

a. Apply sealing tape or paste to the male threads of the process connector nut.

b. Tighten the process connector into the pipe.
- Do not damage the locking set screw when using tools.
- The sensor is marked to identify the downstream alignment. The arrow MUST point DOWNSTREAM.
- Hold the outer sensor housing securely while threading the process connector nut into the fitting. This will prevent the cable from becoming twisted around the sensor while the process connector is tightened into the pipe.

c. Loosen the set screw in the process connector nut.

d. Rotate the Acme threaded outer housing until the flow arrow is aligned in the proper direction.

e. Secure the set screw sufficiently to prevent the outer housing from spinning.
Do not tighten the set screw yet. It may require additional adjustment.

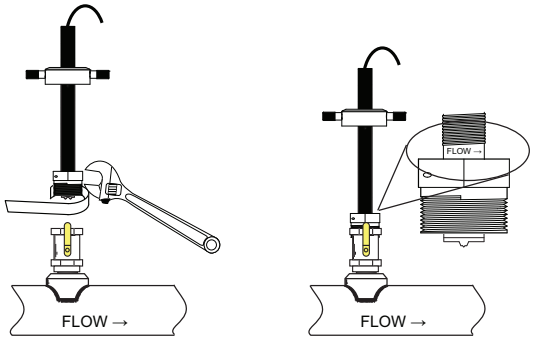

Wear gloves to grip the outer sensor housing.

4. Adjust the magmeter position and insertion depth

a. Insert the brass rod through the alignment reference hole located directly below the sensor adjustment hub.

b. **IMPORTANT!** Apply Anti-Seize Lubricant for stainless steel ("Permatex" brand or equivalent) to the acme threads on the housing. Apply fresh lubricant whenever servicing and before retracting sensor. **Dry operation under high fluid pressure may cause permanent damage!**

c. Adjust the height of the magmeter by turning the sensor adjustment hub clockwise until the distance from the OUTSIDE of the pipe to the bottom of the alignment rod is equal to the H-dimension (as recorded on pg. 6).

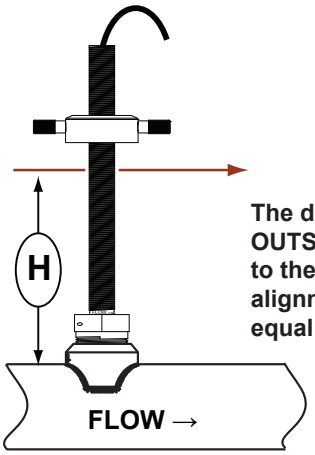

The distance from the OUTSIDE of the pipe to the bottom of the alignment rod must be equal to the H-dimension

d. Loosen the locking set screw and rotate the outer housing to align the brass rod with the centerline if the pipe.

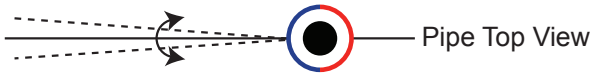

Align Magmeter with pipe ±1°

CAUTION:
Overtightening the set screw may damage the hex key.

e. When the magmeter is adjusted for the proper height and alignment, tighten the locking set screw firmly.

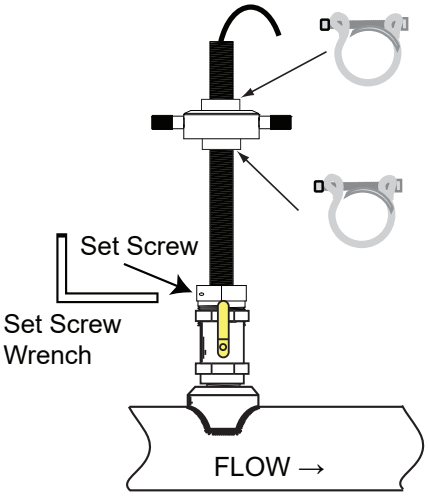

5. Secure the Magmeter in position

a. Secure the height adjustment by installing the two pipe clamps above and below the sensor adjustment hub.
b. Spread the clamp apart to wrap it around the outer housing.
c. Place one clamp immediately above and one clamp immediately below the magmeter adjustment hub.
d. Squeeze the clamp together until it is firmly locked around the housing.

6. Removal Instructions for Hot-tap Installations



- **REDUCE THE PROCESS TEMPERATURE TO LESS THAN 40 °C (104 °F).**
- **REDUCE THE SYSTEM PRESSURE TO A SAFE LEVEL.**
- **WEAR SUITABLE PROTECTIVE EQUIPMENT WHEN WORKING WITH PRESSURIZED PIPES.**

a. Remove the steel clamp from the top of the assembly.
b. Turn the sensor adjustment hub counter-clockwise until the sensor is fully retracted. (The alignment sensor hole should be at the top of the outer housing slot.)
Apply a suitable lubricant to the ACME threads to ease the retraction.
c. Close the valve after raising the magmeter to the top of the housing.

Install a LOCKOUT TAG on the closed valve to prevent accidents!

d. Remove the magmeter from the top of the valve.
e. Loosen the locking set screw on the process connector nut.
f. Use one pipe wrench to hold the valve in place while turning the process connector nut with a second wrench.
g. Do not damage the locking set screw when using tools.

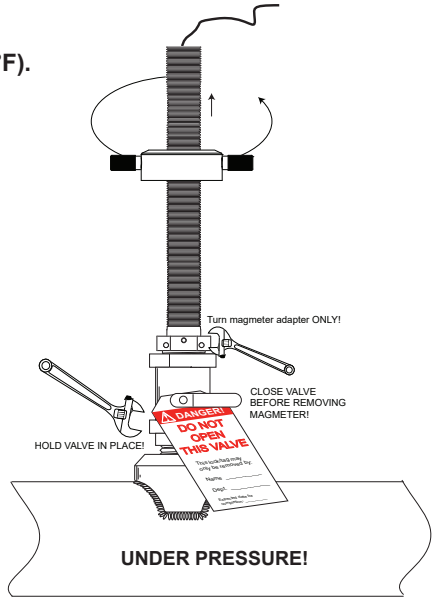

Frequency Output Wiring

The 2552 outputs an open collector frequency signal that can be connected to:

- 8900 Multi-Parameter Controller
- 9900 Transmitter
- 9950 Transmitter

DC power is provided to the 2552 Magmeter by all Signet instruments. **No additional power is required.**

ALWAYS connect AUX power on the 9900 to provide power for the 2552 output signal.

8900 Frequency Wiring

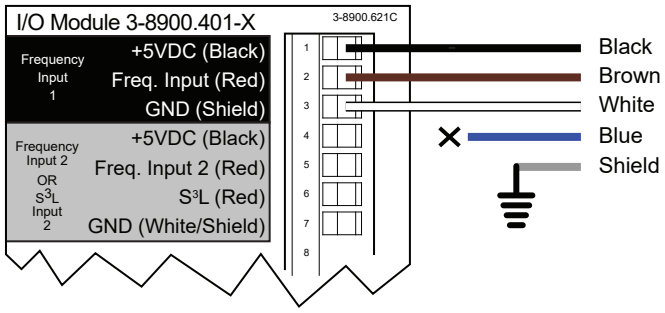

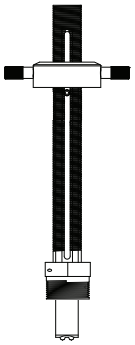

9900 Frequency Wiring

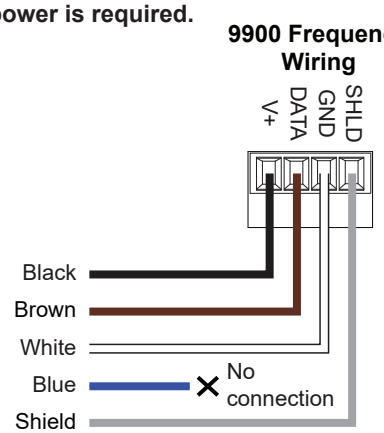

9950 Transmitter

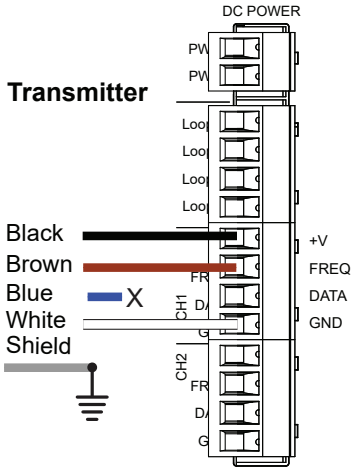

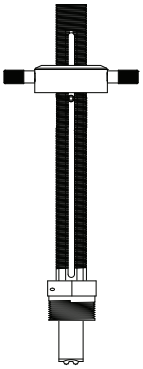

9950 Frequency

Non-Signet Instrument

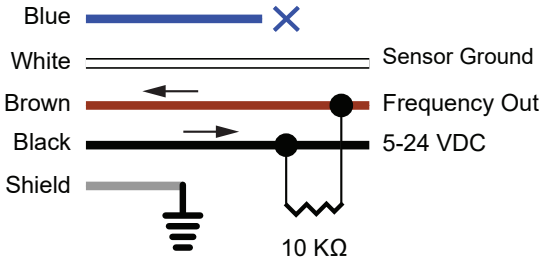

9950/2552 Frequency Output Technical Notes:

- The frequency output will be displayed as positive flow regardless of the flow direction.
- 5 VDC power required by the 2552 is supplied by the 9950. No additional power is required.
- Connect the silver wire (shield) to earth ground in case of EMI noise interference.

Non-Signet Instrument/2552 Frequency Output Technical Notes:

- If connecting the 2552 Magmeter to a flow instrument from another manufacturer, 5 to 24 VDC power must be provided to the 2552.
- A 10 KΩ pull up resistor must also be connected between the +V (Black) and the Freq. Out (Brown) wires.

Digital (S³L) Output Wiring

9950 Input Wiring for 2552 sensors

- Either Frequency or Digital (S³L) may be used.
- **Signet recommends configuring these sensors with the Digital (S³L) output to display reverse flow (negative numbers).**
- Input type is selected by choosing between “SENSOR FREQ” and "SENSOR S3L" in the FLOW sensor type INPUT menu.

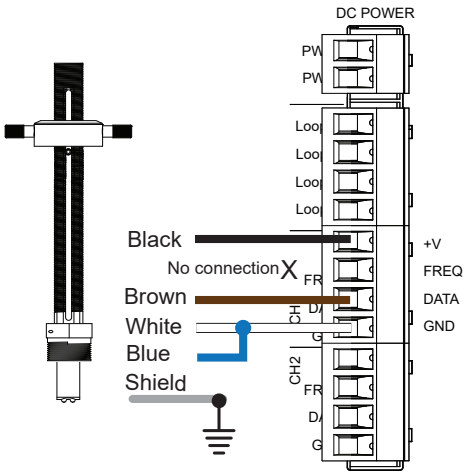

9950 S³L Inputs

Digital (S³L) Output Wiring

DC power is provided to the 2552 Magmeter by all Signet instruments. **No additional power is required.**

ALWAYS connect AUX power on the 8900 and 9900 to provide power for the 2552 output signal.

8900 Digital (S³L) Wiring

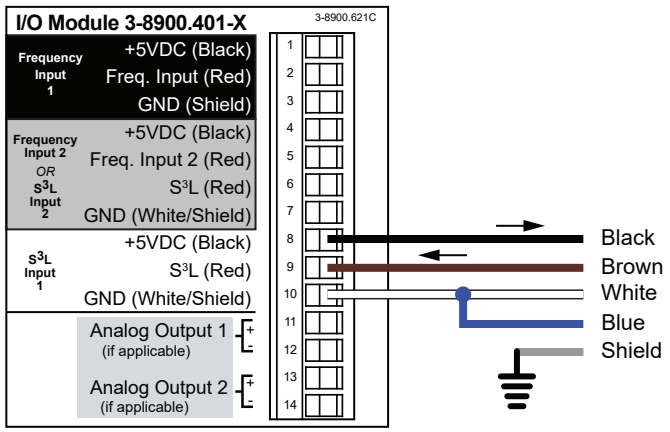

9900 Digital (S³L) Wiring

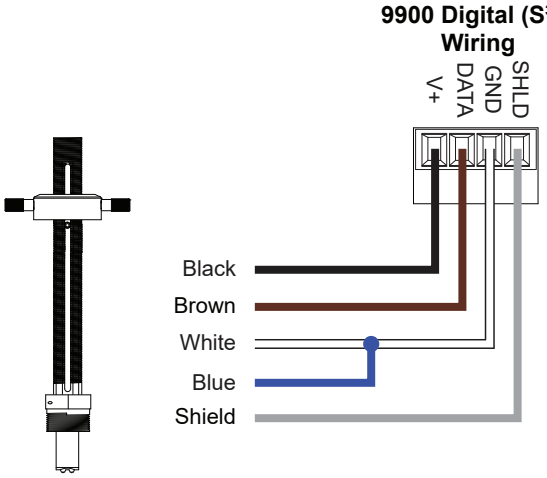

The maximum cable length from the 2552 to the 8900 depends on the 8900 configuration. Refer to the 8900 manual for complete information.

4 to 20 mA Loop Output Wiring

Wiring the 2552-XX-12 Magmeter with 4 to 20 mA Loop Output

The 2552 Magmeter is a traditional 2-wire passive 4 to 20 mA loop transmitter.

- External loop power (21.6 to 26.4 VDC, 22.1 mA maximum) is required. (See Power Requirements on pg. 2)

⚠ **The maximum loop resistance the Magmeter can accomodate is 300 Ω.**

⚠ **The cable length from the Magmeter to the loop monitor cannot exceed 300 m (1000 ft).**

- All 2552 Magmeters are shipped from the factory with the 4 to 20 mA output scaled for 0 to 5 m/s (0 to 16.4 ft/s). If this operating range is suitable, no adjustments are necessary. The calibration charts in this manual list the 20 mA setpoint for each pipe size. Use this information to program the 4 to 20 mA range of the loop device (PLC, Datalogger, recorder, etc.).

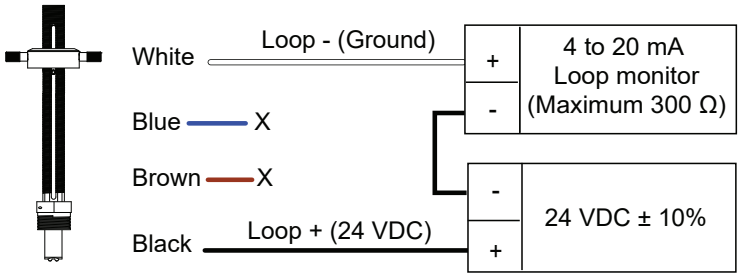

Calibration Data

K-Factors and Full Scale Current Values for 3-2552-2x - x - xx and 3-2552-3x - x - xx Magmeters

The data in these tables is based on dimensions of metal pipe per ANSI 36.10 and ANSI 36.19.
Stainless steel and carbon steel pipe schedules have the same dimensions according to ANSI standards.
Contact the local Georg Fischer Signet distributor for assistance with pipe sizes and materials not listed.

Pipe Size (ANSI)	Schedule	OD (Inches)	WALL (Inches)	ID (Inches)	H Dim -2 Version		H Dim mm -3X Version		K-Factor Pulse/liter	K-Factor Pulse/Gal	Factory set 20 mA (liter/min)	Factory set20 mA (GPM)
					Inch	mm	Inch	mm				
2	40	2.375	0.15	2.07	10 16/32	267.0	16 5/32	409.9	46.19	174.83	649.5	171.6
	80	2.375	0.22	1.94	10 15/32	265.9	16 3/32	408.6	52.49	198.68	571.5	151.0
2½	40	2.875	0.20	2.47	10 14/32	264.9	16	407.7	32.37	122.54	926.7	244.8
	80	2.875	0.28	2.32	10 12/32	263.4	16	406.2	36.57	138.42	820.3	216.7
3	40	3.500	0.22	3.07	10 12/32	263.1	15 31/32	405.8	20.97	79.36	1431	378.0
	80	3.500	0.30	2.90	10 9/32	261.4	15 29/32	404.1	23.47	88.82	1278	337.8
3½	40	4.000	0.23	3.55	10 10/32	261.6	15 29/32	404.4	15.68	59.34	1914	505.6
	80	4.000	0.32	3.36	10 8/32	259.7	15 27/32	402.5	17.44	66.01	1720	454.5
4	40	4.500	0.24	4.03	10 8/32	260.1	15 28/32	402.9	12.18	46.09	2464	651.0
	80	4.500	0.34	3.83	10 5/32	258.1	15 25/32	400.9	13.48	51.03	2225	587.9
5	40	5.563	0.26	5.05	10 4/32	257.0	15 24/32	399.7	7.748	29.33	3872	1023
	80	5.563	0.38	4.81	10	254.6	15 21/32	397.4	8.519	32.25	3521	930.4
6	40	6.625	0.28	6.07	10	253.8	15 20/32	396.6	5.365	20.31	5591	1477
	80	6.625	0.43	5.76	9 28/32	250.8	15 16/32	393.5	5.946	22.51	5045	1333
8	40	8.625	0.32	7.98	9 24/32	247.9	15 12/32	390.7	3.098	11.73	9683	2558
	80	8.625	0.50	7.63	9 20/32	244.3	15 8/32	387.0	3.394	12.85	8838	2335
10	40	10.75	0.37	10.0	9 16/32	241.6	15 4/32	384.4	1.966	7.440	15262	4032
	80	10.75	0.59	9.56	9 11/32	237.00	14 30/32	379.8	2.158	8.170	13899	3672
12	STD	12.75	0.38	12.0	9 10/32	236.4	14 30/32	379.1	1.371	5.187	21890	5783
	XHY	12.75	0.50	11.8	9 6/32	233.8	14 26/32	376.6	1.429	5.410	20987	5545
14	30	14.00	0.38	13.3	9 6/32	233.2	14 26/32	375.9	1.124	4.255	26688	7051
	XHY	14.00	0.50	13.0	9 3/32	230.6	14 22/32	373.4	1.168	4.420	25690	6787
16	30	16.00	0.38	15.3	9	228.1	14 19/32	370.8	0.849	3.212	35352	9340
	40/XHY	16.00	0.50	15.0	8 28/32	225.6	14 16/32	368.3	0.877	3.320	34202	9036
18	STD	18.00	0.38	17.3	8 25/32	223.0	14 13/32	365.8	0.663	2.510	45233	11950
	XHY	18.00	0.50	17.0	8 22/32	220.5	14 10/32	363.2	0.683	2.585	43931	11610
20	20/STD	20.00	0.38	19.3	8 19/32	217.9	14 6/32	360.7	0.533	2.016	56330	14880
	30/XHY	20.00	0.50	19.0	8 16/32	215.39	14 3/32	358.1	0.547	2.069	54876	14500
22	20/STD	22.00	0.38	21.3	8 12/32	212.85	14	355.6	0.437	1.654	68643	18136
	30/XHY	22.00	0.50	21.0	8 9/32	210.31	13 29/32	353.1	0.448	1.694	67037	17711
24	20/STD	24.00	0.38	23.3	8 6/32	207.77	13 26/32	350.5	0.365	1.382	82172	21710
	XHY	24.00	0.50	23.0	8 3/32	205.23	13 22/32	348.0	0.373	1.412	80414	21246

Calibration Data

K-Factors and Full Scale Current Values for 3-2552-2x - x - xx and 3-2552-3x - x - xx Magmeters

The data in these tables is based on dimensions of metal pipe per ANSI 36.10 and ANSI 36.19.
Stainless steel and carbon steel pipe schedules have the same dimensions according to ANSI standards.
Contact the local Georg Fischer Signet distributor for assistance with pipe sizes and materials not listed.

Pipe Size (ANSI)	Schedule	OD (Inches)	WALL (Inches)	ID (Inches)	H Dim -2 Version		H Dim mm -3X Version		K-Factor Pulse/liter	K-Factor Pulse/Gal	Factory set 20 mA (liter/min)	Factory set20 mA (GPM)
					Inch	mm	**Inch**	**mm**				
26	STD	26	0.38	25.25	8	202.69	13 19/32	345.4	0.310	1.172	96917	25606
	20/XHY	26	0.50	25.00	7 28/32	200.15	13 16/32	342.9	0.316	1.195	95008	25101
28	STD	28	0.38	27.25	7 25/32	197.61	13 13/32	340.4	0.266	1.006	112879	29823
	20/XHY	28	0.50	27.00	7 22/32	195.07	13 10/32	337.8	0.271	1.025	110817	29278
30	STD	30	0.38	29.25	7 19/32	192.53	13 6/32	335.3	0.231	0.873	130056	34361
	20/XHY	30	0.50	29.00	7 16/32	189.99	13 3/32	332.7	0.235	0.888	127842	33776
32	STD	32	0.38	31.25	7 12/32	187.45	13	330.2	0.202	0.765	148449	39220
	20/XHY	32	0.50	31.00	7 9/32	184.91	12 29/32	327.7	0.205	0.777	146084	38595
34	STD	34	0.38	33.25	7 6/32	182.37	12 26/32	325.1	0.179	0.676	168059	44401
	20/XHY	34	0.50	33.00	7 3/32	179.83	12 22/32	322.6	0.181	0.686	165541	43736
36	STD	36	0.38	35.25	7	177.29	12 19/32	320.0	0.159	0.601	188885	49903
	20/XHY	36	0.50	35.00	6 28/32	174.75	12 16/32	317.5	0.161	0.610	186215	49198
38	STD	38	0.38	37.25	6 25/32	172.21	12 13/32	315.0	0.142	0.538	210926	55727
	XHY	38	0.50	37.00	6 22/32	169.67	12 10/32	312.4	0.144	0.546	208105	54981
40	STD	40	0.38	39.25	6 19/32	167.13	12 6/32	309.9	0.128	0.485	234184	61872
	XHY	40	0.50	39.00	6 16/32	164.59	12 3/32	307.3	0.130	0.491	231210	61086
42	STD	42	0.38	41.25	6 12/32	162.05	12	304.8	0.116	0.439	258658	68338
	XHY	42	0.50	41.00	6 9/32	159.51	11 29/32	302.3	0.117	0.444	255532	67512
48	STD	48	0.38	47.25	5 25/32	146.81	11 13/32	289.6	0.088	0.335	339377	89664
	XHY	48	0.50	47.00	5 22/32	144.27	10 26/32	274.32	0.089	0.338	335795	88717
54	STD	54.00	0.38	53.25	5 6/32	131.57	10 22/32	271.78	0.07	0.2634	431040	113881
	XHY	54.00	0.50	53.00	5 3/32	129.03	10 6/32	259.08	0.06	0.2659	427002	112814
60	STD	60.00	0.38	59.25	4 19/32	116.33	10 3/32	256.54	0.06	0.2128	533648	140990
	XHY	60.00	0.50	59.00	4 16/32	113.79	9 19/32	243.84	0.06	0.2146	529154	139802
66	STD	66.00	0.38	65.25	4	101.09	9 16/32	241.30	0.05	0.1754	647201	170991
	XHY	66.00	0.50	65.00	3 29/32	98.55	9	228.60	0.05	0.1768	642251	169683
72	STD	72.00	0.38	71.25	3 13/32	85.85	8 29/32	226.06	0.04	0.1471	771699	203883
	XHY	72.00	0.50	71.00	3 10/32	83.31	8 13/32	213.36	0.04	0.1482	766293	202455
78	STD	78.00	0.38	77.25	2 26/32	70.61	8 10/32	210.82	0.03	0.1252	907141	239667
	XHY	78.00	0.50	77.00	2 22/32	68.07	7 26/32	198.12	0.03	0.1260	901280	238119
84	STD	84.00	0.38	83.25	2 6/32	55.37	7 22/32	195.58	0.03	0.1078	1053529	278343
	XHY	84.00	0.50	83.00	2 3/32	52.83	7 6/32	182.88	0.03	0.1084	1047211	276674
90	STD	90.00	0.375	89.25	1 19/32	40.13	7 3/32	180.34	0.02	0.0938	1210862	319910
	XHY	90.00	0.500	89.00	1 16/32	37.59	6 19/32	167.64	0.02	0.0943	1204087	318120
96	STD	96.00	0.375	95.25	1	24.89	6 16/32	165.10	0.02	0.0823	1379139	364369
	XHY	96.00	0.500	95.00	29/32	22.35	6	152.40	0.02	0.0828	1371909	362459
102	STD	102.00	0.38	101.25	13/32	9.65	5 29/32	149.86	0.02	0.0729	1558362	411720
	XHY	102.00	0.50	101.00	10/32	7.11	10/32	7.11	0.02	0.0732	1550676	409690

Bi-Directional Flow

The 2552 magmeter is designed to measure bi-directional flow.

- **4 to 20 mA output models:** May be scaled to span any flow range:
  For example: "4 to 20 mA = -100 GPM to +100 GPM"
- **Frequency output models:** The 2552 will generate a frequency regardless of flow direction. Signet instrumentation cannot distinguish bi-directional flow from frequency inputs.
- **Digital (S^3L) output models**: Reverse flow results in 0 flow rate displayed on the 8900 Multi-Parameter Controller.
- The forward flow direction is indicated at the base of the sensor. The arrow must point DOWNSTREAM.

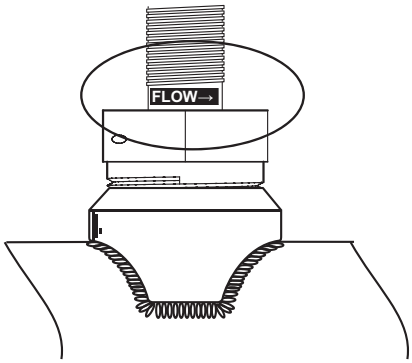

0252 Configuration Tool

No calibration is necessary to begin using the 2552.
The application and performance settings are selected by the factory to meet the requirements of most applications.

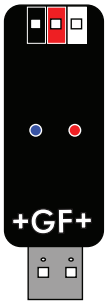

The 2552 application and performance settings can be customized using the 3-0252 Configuration Tool.

The following parameters can be modified with the 3-0252 USB Setup tool and software. A Windows PC is required:

- **4 to 20 mA span**: Factory setting is 0 to 5 m/s.
  Can be customized to any range, including bi-directional flow ranges, ±10 m/s maximum.
- **Noise Rejection Filter**: Factory set for 60 Hz.
  Can be changed to 50 Hz.
- **Low Flow Cutoff**: Factory setting is 0.05 m/s.
  Can be increased to meet specific application requirements.
- **Averaging Time**:Factory setting is 14 seconds
  Can be customized from 0.1 seconds to 100 seconds
- **Sensitivity**: Factory setting is 25% of full scale
  Can be customized to any % of full scale

MONITOR/VERIFY SENSOR

The **MONITOR/VERIFY SENSOR** function in the Signet 3-0252 Setup Tool software is very useful as a system troubleshooting tool.

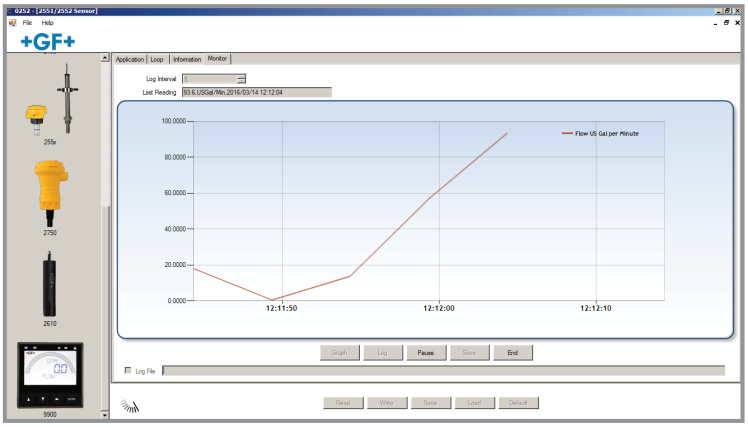

Troubleshooting

Troubleshooting with the RED and BLUE lights

The 2552 uses two colored LEDs to indicate the status of the measurement. They are located at the top of the magmeter, recessed inside the threaded steel housing. Look down the outer housing to see them.

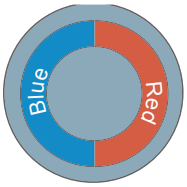

No Lights:	The power is off or the sensor is not connected
Solid Blue:	The power is on but there is no flow in the pipe.
Blinking Blue:	Normal operation, blink rate is proportional to the flow rate.
Alternating Red-Blue:	Empty pipe indication (electrodes are not wet.)
Blinking Red:	System errors (Generally indicates electrical noise interference)
Solid Red:	Instrument error (Generally indicates defective electronics component)

The lights are for troubleshooting guidance only and are not absolute fault indicators.

Troubleshooting Table

Symptom	Possible Cause	Possible Solution
• Frequency, Digital or Current output is erratic.	• Magmeter installed too close to upstream obstruction. • Magmeter electrodes are coated. • Magmeter electrodes exposed to air bubbles/pockets. • Electrical noise is interfering with the measurement. • New sensor, metal surface not properly conditioned.	• Move the Magmeter upstream at least 10 pipe diameters from obstruction. • Clean the electrodes with soft cloth. Do not use abrasives. • Eliminate air bubbles in the pipe. • Remove the Magmeter and reinstall with the flow direction arrow on the sensor body pointed DOWNSTREAM. • Modify grounding as required to protect the Magmeter from interference. • Soak sensor overnight in fluid.
• Output is not 0 when flow is stopped.	• Electrodes not adequately conditioned. • Flow rate is less than Low flow cutoff value. • Electrical noise is interfering with the measurement. • Defective Magmeter	• Soak sensor overnight in fluid. • Configure pipe so electrodes are always in fluid. • Modify grounding as required to protect the Magmeter from interference. • Adjust low flow cutoff higher. • Return to factory for service.
• 4 to 20 mA output is incorrect.	• 4 to 20 mA is not scaled same as Loop device. • Loop device is not scaled same as Magmeter. • Defective Magmeter	• Use 3-0252 Span and Setup tool to set output range. • Respan Loop device to match Magmeter. • Return to factory for service.
• Frequency output is inoperative • Digital (S^3L) output is inoperative. • Loop output is inoperative.	• 2552 is wrong model. • Wiring is not correct. • Frequency input to other manufacturer's flow instrument does not have pull-up resistor.	• Freq/S^3L model is 3-2552-XX-11. • Blue wire must be grounded for freq out, open for S^3L out. • 4 to 20 mA model is 3-2552-XX-12. • Check wiring, make corrections. • Install 10kΩ resistor.
• Output is 22.1 mA.	• Conductivity is less than 20 µS/cm. • Electrical noise • Electronic component failure.	• Unsuitable application for Magmeter. • Check grounding, eliminate noise source • Return to factory for service.

Maintenance

There are no user-serviceable components in the Magmeter.

- If the fluid contains deposits and solids that may coat the electrodes, a regular cleaning schedule is recommended.
- Do not use abrasive materials on the metal electrodes. Clean with soft cloth and mild detergent only.
- Use a cotton swab and mild detergent to remove deposits on the metal electrodes at the tip of the sensor.
- If the sensor nut will not turn smoothly, a light lubricant can be applied to the threads.
- Re-apply Anti-Seize Lubricant for stainless steel ("Permatex" brand or equivalent) to the acme threads whenever servicing and before retracting sensor.

Sensor Selection Guide

The 2552 Magmeter can be installed into a variety of pipe sizes. Follow the steps below to ensure that you choose the right sensor for your application.

Step 1: Determine how the sensor will be installed

A. For standard (non Hot-Tap) installations:
The height of the weldolet (threadolet) and pipe adapter(s) should be determined before the sensor is purchased.

- For retrofit installations, the stack height, or "A" dimension (see Fig. 1), is the overall height from the top of the pipe to the highest point of the stack before the sensor is connected.
- For new installations, Signet recommends a weldolet (threadolet) and an adapter to accommodate the 1¼ in. (or 1½ in. for 2552-3) sensor process threads. The stack height, or "A" dimension (see Fig. 1), is the overall height from the top of the pipe to the highest point of the stack.

B. For Hot-Tap installations:
The stack height of the ball valve, nipple weldolet (threadolet) and pipe adapters should be determined before the sensor is purchased.

- For retrofit installations, the ball valve must be at least a 1¼ in. (or 1½ in. for 2552-3) full port valve. The stack height, or "A" dimension (see Fig. 2), is the overall height from the top of the pipe to the top of the ball valve, or the top of the highest point of the stack before the sensor is connected.
- For new installations, Signet recommends a 1¼ in. or 1½ in. full port ball valve, a short nipple and a weldolet (threadolet). The stack height or "A" dimension (see Fig. 2) is the overall height from the top of the pipe to the top of the ball valve.

Fig. 1
Standard installation with "A" dimension using a weldolet (threadolet)

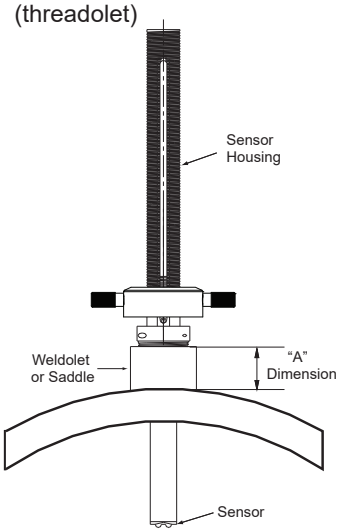

Step 2: Determine how the sensor will be installed

Once the "A" dimension is determined, go to the sensor selection table and find your "A" dimension on the left column. Next, find the appropriate pipe size at the top of the chart. To determine the correct sensor size locate where the pipe size column meets the max "A" dimension row.

Max. "A" Dim			Pipe Size																																		
			inches	2	2.5	3 to 31/2"	4	5	6 to 8"	10	12 to 14"	16	18	20	22	24	26 to 28"	30 to 32"	34	36 to 38"	40 to 42"	48	54	60	66	72	78	84	102
			DN	50	65	80 to 90	100	125	150 to 200	250	300 to 350	400	450	500	550	600	650 to 700	750 to 800	850	900 to 950	1000 to 1100	1200	1400	1500	1700	1800	2000	2100	2550
	mm	inches																																			
	50.8	2		2	2	2	2	2	2	2	2	2	2	2	2	2	2	2	2	2	2	2	3	3	3	3	3	3	3
	63.5	2.5		2	2	2	2	2	2	2	2	2	2	2	2	2	2	2	2	2	2	2	3	3	3	3	3	3	3
	76.2	3		2	2	2	2	2	2	2	2	2	2	2	2	2	2	2	2	2	2	2	3	3	3	3	3	3	3
	88.9	3.5		2	2	2	2	2	2	2	2	2	2	2	2	2	2	2	2	2	2	2	3	3	3	3	3	3	3
	101.6	4		2	2	2	2	2	2	2	2	2	2	2	2	2	2	2	2	2	2	2	3	3	3	3	3	3	3
	114.3	4.5		2	2	2	2	2	2	2	2	2	2	2	2	2	2	2	2	2	2	3	3	3	3	3	3	3	
	127	5		2	2	2	2	2	2	2	2	2	2	2	2	2	2	2	2	2	3	3	3	3	3	3	3	3	
	139.7	5.5		2	2	2	2	2	2	2	2	2	2	2	2	3	2	2	3	3	3	3	3	3	3	3	3	3	
	152.4	6		2	2	2	2	2	2	2	2	2	2	2	3	3	2	3	3	3	3	3	3	3	3	3	3	3	
	165.1	6.5		2	2	2	2	2	2	2	2	2	3	3	3	3	3	3	3	3	3	3	3	3	3	3	3		
	177.8	7		2	2	2	2	2	2	2	3	3	3	3	3	3	3	3	3	3	3	3	3	3	3	3			
	190.5	7.5		2	2	2	2	2	2	2	3	3	3	3	3	3	3	3	3	3	3	3	3	3	3				
	228.6	9		2	3	3	3	3	3	3	3	3	3	3	3	3	3	3	3	3	3	3	3						
	241.3	9.5		3	3	3	3	3	3	3	3	3	3	3	3	3	3	3	3	3	3	3							
	254	10		3	3	3	3	3	3	3	3	3	3	3	3	3	3	3	3	3	3								
	266.7	10.5		3	3	3	3	3	3	3	3	3	3	3	3	3	3	3	3	3									
	279.4	11		3	3	3	3	3	3	3	3	3	3	3	3		3	3	3										
	292.1	11.5		3	3	3	3	3	3	3	3	3	3	3			3												
	304.8	12		3	3	3	3	3	3	3	3	3	3																
	317.5	12.5		3	3	3	3	3	3	3	3																		
	330.2	13		3	3	3	3	3	3	3																			
	342.9	13.5		3	3	3	3	3	3																				
	355.6	14		3	3	3	3	3																					
	375.9	14.8		3	3																								
	381	15																											

Legend:

2: Use 3-2552-2, max. insertion = 236 mm (9.3 in.)

3: Use 3-2552-3, max. insertion = 368 mm (14.8 in)

This chart is based on the thickest commonly available pipe.

Fig. 2
Hot-Tap installation with "A" dimension using a ball valve, short nipple and weldolet (threadolet)

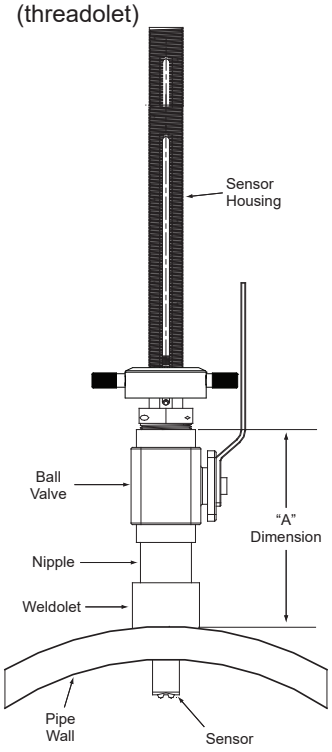

Step 3: Refer to Ordering Information to select corresponding part numbers

Ordering Information

Model 2552 Metal Magmeter

Mfr. Part No.	Code	Description
Sensor insertion depth 9.3 inches*, 1¼ inch NPT Process Connection Threads**		
3-2552-21-A-11	159 001 513	Fixed Cable, 7.6m (25 ft); no connector, Frequency or Digital (S^3L); for use with any Signet Flow Instrument or the 8900 Multi-Parameter Controller
3-2552-21-A-12	159 001 514	Fixed Cable, 7.6m (25 ft); no connector, 4 to 20 mA output
3-2552-21-B-11	159 001 515	Watertight sensor connector (cable sold separately), 7.6m (25 ft); Frequency or Digital (S^3L); for use with any Signet Flow Instrument or the 8900 Multi-Parameter Controller
3-2552-21-B-12	159 001 516	Watertight sensor connector (cable sold separately), 4 to 20 mA output
Sensor insertion depth 9.3 inches*, 1¼ inch ISO Process Connection Threads**		
3-2552-22-A-11	159 001 517	Fixed Cable, 7.6m (25 ft); no connector, Frequency or Digital (S^3L); for use with any Signet Flow Instrument or the 8900 Multi-Parameter Controller
3-2552-22-A-12	159 001 518	Fixed Cable, 7.6m (25 ft); no connector, 4 to 20 mA output
3-2552-22-B-11	159 001 519	Watertight sensor connector (cable sold separately), Frequency or Digital (S^3L); for use with any Signet Flow Instrument or the 8900 Multi-Parameter Controller
3-2552-22-B-12	159 001 520	Watertight sensor connector (cable sold separately), 4 to 20 mA output
Sensor insertion depth = 14.8 inches*, 1½ inch (2552-3 only) NPT Process Connection Threads**		
3-2552-33-A-11	159 001 521	Fixed Cable, 7.6m (25 ft); no connector, Frequency or Digital (S^3L); for use with any Signet Flow Instrument or the 8900 Multi-Parameter Controller
3-2552-33-A-12	159 001 525	Fixed Cable, 7.6m (25 ft); no connector, 4 to 20 mA output
3-2552-33-B-11	159 001 523	Watertight sensor connector (cable sold separately), Frequency or Digital (S^3L); for use with any Signet Flow Instrument or the 8900 Multi-Parameter Controller
3-2552-33-B-12	159 001 527	Watertight sensor connector (cable sold separately), 4 to 20 mA output
Sensor insertion depth = 14.8 inches*, 1½ inch (2552-3 only) ISO Process Connection Threads**		
3-2552-34-A-11	159 001 522	Fixed Cable, 7.6m (25 ft); no connector, Frequency or Digital (S^3L); for use with any Signet Flow Instrument or the 8900 Multi-Parameter Controller
3-2552-34-A-12	159 001 526	Fixed Cable, 7.6m (25 ft); no connector, 4 to 20 mA output
3-2552-34-B-11	159 001 524	Watertight sensor connector (cable sold separately), Frequency or Digital (S^3L); for use with any Signet Flow Instrument or the 8900 Multi-Parameter Controller
3-2552-34-B-12	159 001 528	Watertight sensor connector (cable sold separately), 4 to 20 mA output
Accessories and Replacement Parts		
2120-1512	159 001 425	1½ x 1¼ inch NPT adapter for retrofitting 2540 installation to 2552 - 316 stainless steel
2120-2012	159 001 426	2 x 1¼ inch NPT adapter for retrofitting 2550 installation to 2552 - 316 stainless steel
3-2552.392	159 001 530	1¼ inch NPT full port stainless steel ball valve and nipple kit
3-2552.393	159 001 531	1¼ inch NPT full port brass ball valve & nipple kit
3-2552.394	159 001 532	1½ inch NPT conduit adapter, aluminum
4301-2125	159 001 533	1¼ inch NPT full port ball valve - brass
4301-3125	159 001 387	1¼ inch NPT full port ball valve - stainless steel
3-0252	159 001 808	Configuration tool
5541-4184	159 001 388	4-conductor, 22 AWG, water-tight connector, 4m (13 ft)
5541-4186	159 001 389	4-conductor, 22 AWG, water-tight connector, 6m (19.5 ft)
special order	special order	4-conductor, 22 AWG, water-tight connector, cable length in 25 ft increments
special order	special order	1¼ in. NPT or ISO Process Connection threads to replace 1½ in. NPT or ISO threads

* Customer must determine stack height (ball valve, nipple, weldolet, etc.). Refer to Sensor Selection on previous page to determine “A” dimension.

** 1¼ inch process connection is the standard thread size on the 2552-2. For the 2552-3, the 1½ inch process connection is standard and the 1¼ inch is available as a special order.

+GF+

Georg Fischer Signet LLC, 3401 Aerojet Avenue, El Monte, CA 91731-2882 U.S.A. • Tel. (626) 571-2770 • Fax (626) 573-2057
For Worldwide Sales and Service, visit our website: www.gfsignet.com • Or call (in the U.S.): (800) 854-4090
For the most up-to date information, please refer to our website at www.gfsignet.com

© Georg Fischer Signet LLC 2019