CALL TOLL FREE 877-742-2878 FOR SALES AND SUPPORT
RETURN TO BurtProcess.com

+GF+

English

Signet 2610 Process Optical Dissolved Oxygen Sensor

3-2610.090 Rev. 5 05/19

Operator's Manual

Gen II



Description

Your new GF Signet Gen II Dissolved Oxygen Sensor (RDO® Pro) is a rugged, reliable sensor designed to deliver accurate dissolved oxygen (DO) data across a wide measuring range while reducing maintenance costs. It features the latest optical technology for DO measurement.

The Gen II DO sensor comes with three standard outputs:
- Digital (S^3L) to communicate with Signet 9900, 9950 and 8900 instruments
- 4 to 20 mA, factory default ranged 0.2 to 20 ppm
- ModBus RS485

The Gen II system consists of the following:

- Sensor body with removable nose cone
- 10 m (32.8 ft) cable with stripped and tinned ends
- Optical DO sensing cap
- Titanium Temperature Sensor

RDO is a registered trademark of In-Situ® Inc., Fort Collins, CO USA

Table of Contents

Warranty Information 2
Product Registration 2
Safety Information 2
Chemical Compatibility 2
Care and Maintenance 2
Specifications 3
Dimensions 3
Serial Numbers 3
Unpacking the Sensor 4
Calibration 4
Wiring 5
Sensor Cap Replacment 6
Sensor Installation 6-7
Ordering Information 8



- English
- Deutsch
- Français
- Español
- 中文

Warranty Information

Refer to your local Georg Fischer Sales office for the most current warranty statement.

All warranty and non-warranty repairs being returned must include a fully completed Service Form and goods must be returned to your local GF Sales office or distributor. Product returned without a Service Form may not be warranty replaced or repaired.

Signet products with limited shelf-life (e.g. pH, ORP, chlorine electrodes, calibration solutions; e.g. pH buffers, turbidity standards or other solutions) are warranted out of box but not warranted against any damage, due to process or application failures (e.g. high temperature, chemical poisoning, dry-out) or mishandling (e.g. broken glass, damaged membrane, freezing and/or extreme temperatures).

Product Registration

Thank you for purchasing the Signet line of Georg Fischer measurement products.
If you would like to register your product(s), you can now register online in one of the following ways:

- Visit our website **www.gfsignet.com.** Under **Service and Support** click on **Product Registration Form**
- If this is a pdf manual (digital copy), **click here**

Safety Information

	**Caution / Warning / Danger** Indicates a potential hazard. Failure to follow all warnings may lead to equipment damage, injury, or death
	**Personal Protective Equipment (PPE)** Always utilize the most appropriate PPE during installation and service of Signet products.
	**Hand Tighten Only** Overtightening may permanently damage product threads and lead to failure of the retaining nut.
	**Do Not Use Tools** Use of tool(s) may damage product beyond repair and potentially void product warranty.
	**Do Not Freeze** Products are temperature sensitive and may contain freezable liquids. Freezing damage to pH, ORP, and Chlorine electrodes voids product warranty.

Chemical Compatibility

- Do not use organic solvents - they will damage the foil.
- Do not wet the lens area with water or any solution.
- Use Alconox to remove grease or other matter.
- Soak in vinegar and deionized (DI) water to remove mineral deposits or extensive fouling.

Care and Maintenance

Cleaning the Sensor Cap

1. Leave the cap and nose cone on the sensor!
2. Rinse the sensor with clean water from a squirt bottle or spray bottle.
3. Gently wipe with a soft-bristled brush or soft cloth if biofouling is present. Use Alconox® to remove grease.
4. If extensive fouling or mineral build-up is present, soak the cap end in vinegar for 15 min., then soak in deionized water for 15 min.



Do not use organic solvents - they will damage the foil.
Do not remove the cap from the sensor prior to brushing.

Cleaning the Optical Window

Perform only when changing the cap. See full instructions in the sensor replacement cap kit.



Do not wet the lens area with water or any solution. Remove the cap and gently wipe the window with the supplied lens wipe. Use only the supplied lens wipe for cleaning. Do not use any other wipe or material.

Cleaning the Sensor Body

With the sensor cap installed on sensor, gently scrub sensor body with a soft-bristled brush or nylon dish scrubber. Use Alconox to remove grease or other matter. Soak in vinegar and deionized (DI) water to remove mineral deposits or extensive fouling as in step 4, above.

Cap Storage

- Prior to installation: Store in factory supplied container.
- Installed: Keep or store in the calibration chamber with the storage cap attached and a few drops of clean water.

Specifications

General

Sensor type	Luminescent dissolved oxygen sensor
Transmitter/local display	Optional, not required
Communications options	Digital (S^{3}L) Modbus (RS485), 4 to 20 mA,
Cable length	32.8 ft/10 meters
Internal mounting thread	1¼ NPT

Performance

Salinity range	0 to 42 PSU, fixed or real-time capable
pH range	2 to 10 pH
Barometric range	507 to 1115 mbar, fixed or real-time capable
Idle current	160 µA typical at 24 VDC
Maximum pressure	300 psi
Range	0.2 to 20 mg/L concentration, 0 to 200% saturation
Accuracy (DO)	±0.1 mg/L, 0 to 8 mg/L, ±0.2 mg/L, 8 to 20 mg/L
Response time	Cap T90: 30 sec Cap T95: 37 sec @ 25 °C
Resolution	0.01 mg/L
Measure current	6 mA typical at 24 VDC

Environmental

Wetted Materials	ABS, Titanium, FKM
Usage life of cap	2 year from the first instrument reading
Shelf life of cap	36 months from date of manufacture (install w/in 12 mo. of manufacture)
Operating temperature	0 °C to 50 °C (32 °F to 122 °F)
IP rating	IP-67 with cap off, IP-68 with cap installed
Storage conditions, cap	1 °C to 60 °C (33 °F to 140 °F), in factory container
Storage conditions, sensor:	-5 °C to 60 °C (23 °F to 140 °F)

Warranty

Sensor	3 years from date of manufacture
Cap	2 years from date of manufacture or 2 years from first reading, whichever comes first

Standards and Approvals

CE
RoHS Compliant

China RoHS (Go to www.gfsignet.com for details)

This device complies with Part 15 of the FCC rules. Operation is subject to the following two conditions: (1) This device may not cause harmful interference, and, (2) This device must accept any interference received, including interference that may cause undesired operation.

Dimensions

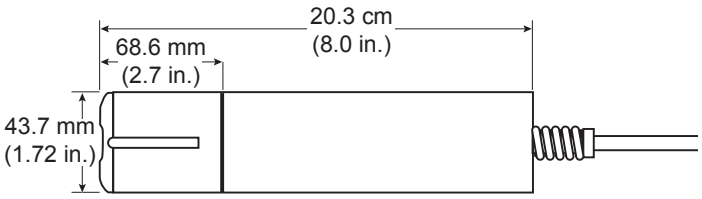

Serial Numbers

The instrument part number, code number and serial number is engraved on the side of the unit.

Unpacking the Sensor

1. Remove from the shipping box the GEN II DO sensor and the cylindrical storage container containing the sensor cap.
2. Hold the main body with one hand and with your pother hand turn the nose cone counter clockwise to remove the nose cone.
3. Remove the RED dust cap by gently pulling the cap with your fingers.
4. Open the small cylindrical container and remove the sensor cap.
5. Inspect the two contacts on the sensor tip for damage.
6. Aligh the sensor cap internal flat to the sensor tip flat and install.
7. Verify the cap is sitting flush with the sensor tip base.
8. Reinstall the nose cone.

CAUTION: Twisting the sensor cap can permanently damage both the cap and the sensor.

- Avoid allowing moisture, including atmospheric humidity, inside the cap. Keep the cap in its sealed packaging until you are ready to install it. Install promptly. Make sure that O-ring grooves are dry and the O-ring is not rolled or pinched inside the cap.
- The cap's lifetime is 2 years after the first reading has been taken. Install by the date printed on the packaging.

Calibration

Calibration is not required. The unit, as shipped from the factory, will measure within 2% of reading for the life of the sensor cap.

Replacing the sensor cap will keep the reading within 2% accuracy.



3-2610-51 to 9900 Wiring

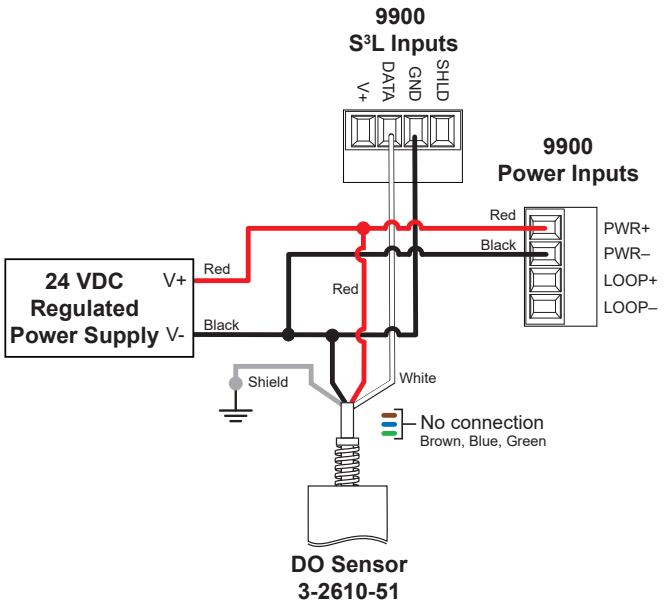

9900 Generation III supports 3-2610-51 direct connection. Please refer to the 9900 product manual for setup instructions.

3-2610 to Modbus Wiring

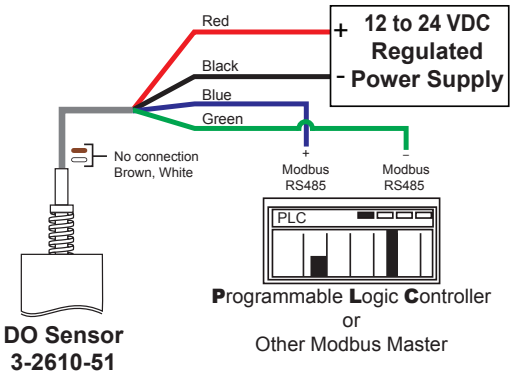

NOTE: The S³L and Modbus connectors can be used simultaneously with the 4 to 20 mA.

Modbus programming manual is available on the web at www.gfsignet.com.

3-2610 to 4 to 20 mA Wiring

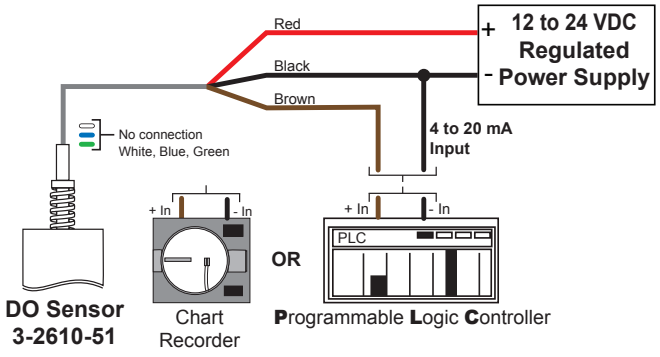

NOTE: The S³L and Modbus connectors can be used simultaneously with the 4 to 20 mA.

For 8900 wiring, contact factory

3-9950 Wiring

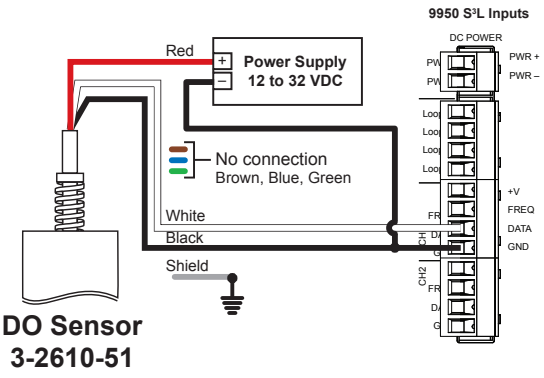

Technical Notes:
The wiring of the 3-2610-51 is non-standard:

- RED is 12 to 24 VDC
- WHITE is Data
- BLACK is VDC Ground (PWR -)
- A jumper MUST be installed between PWR- and S³L GND.

Sensor Cap Replacement

Replace the Sensor Cap

The sensor cap has a 2-year life after the instrument takes its first reading. Install the cap by the date printed on the package. Replacement caps are available from Georg Fischer, part number 3-2610.394 (159 310 301).

Avoid allowing moisture, including atmospheric humidity, inside the cap. Keep the cap in its sealed package until\you are ready to install it. Install promptly. Make sure that O-ring grooves are dry and that the O-rings are not rolled or pinched inside the cap.

1. Pull the used sensor cap off of the sensor. **DO NOT TWIST!**
2. Remove the existing O-rings from the sensor.
3. Use a lint-free cloth to remove any moisture from the sensor body. **NOTE:** Make sure that the O-ring grooves are dry. Avoid touching or cleaning the lens with anything other than the supplied lens wipe.
4. Use your finger to apply a thin layer of lubricant around the O-ring grooves. Place the O-rings on the sensor. **NOTE:** Do not transfer lubricant to the lens or sensor pins.
5. Clean the lens on the sensor with the wipe provided in the kit and allow to dry thoroughly. Inspect for scratches or dirt.
6. Remove the new cap from its sealed package.
7. Align the arrow on the cap with the index mark on the sensor and press it firmly until it seals over the probe body. **DO NOT TWIST.** Make sure that the O-rings are not pinched or rolled between the cap and sensor.
8. Replace the nose cone on the sensor.



Sensor Cap Replacement Kit Contents:

- Sensor cap
- O-rings (2)
- O-ring lubricant
- Lens wipe
- Instruction sheet

Sensor Installation

The cable end of the Gen II DO sensor is internally threaded (1¼ NPT) and can be attached to an externally threaded pipe.

When installed, make sure that the nose cone and Temperature sensor are completely submerged.

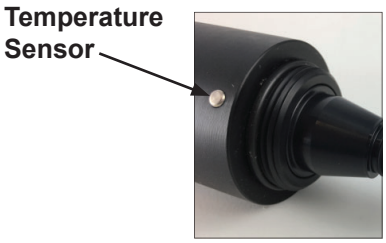

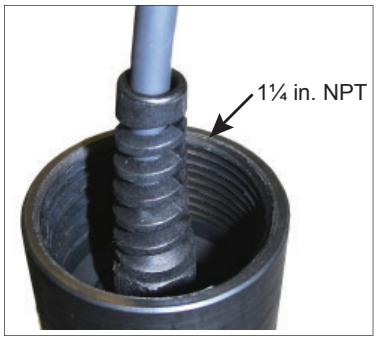

2610 DO Threadded Pipe Adapter Kit

The adapter kit allows a 9900 to be installed right on the 3-2610-51 sensor assembly to measure dissolved oxygen in a pressurized piping system. The kit includes a ¾" NPT closed nipple, 1¼" NPT closed nipple and 2" male threaded pipe adapter.

Use the 1¼" NPT closed nipple to install in a straight pipe for submersible installation with monitoring instrumention in a panel.

3-2610.501 DO Threaded Pipe Adapter kit

Includes one (1) each:

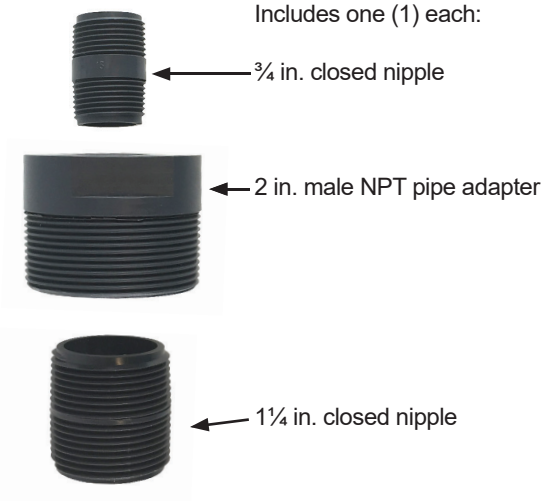

Sensor Installation cont.

In-Line installations

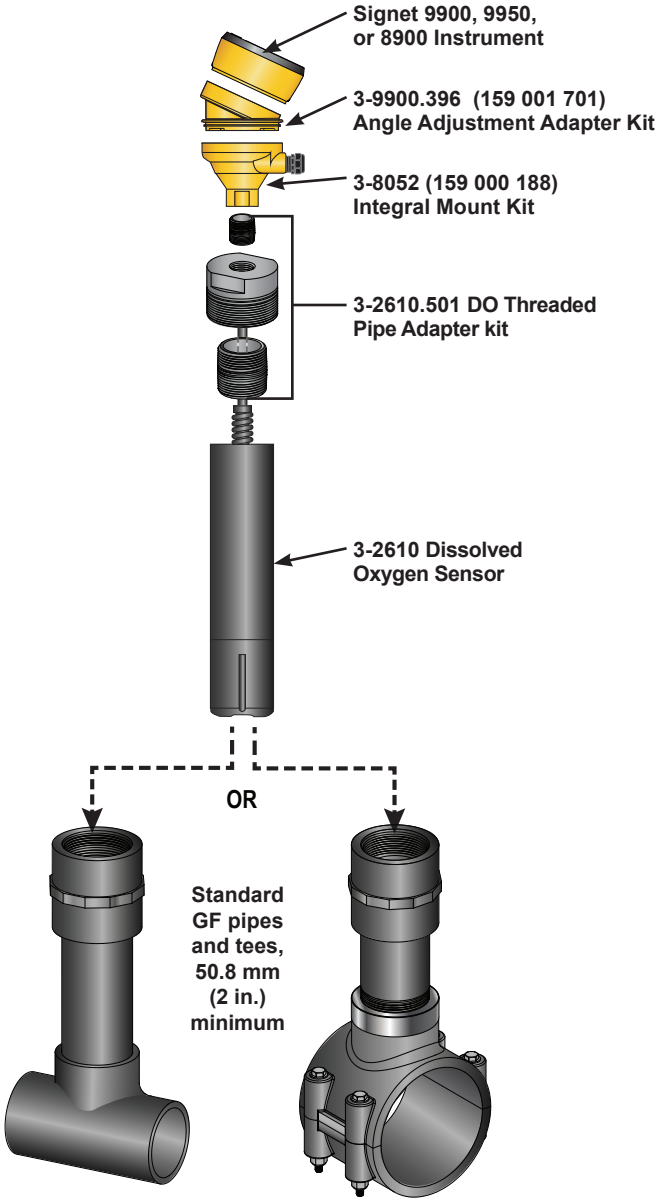

Adapters, Saddles and Tees

GF Signet has a line of tees and saddle assemblies in PVC and CPVC for pipes ranging 2 inch to 8 inches, to allow in-line measuring of dissolved oxygen.

Submersible installations

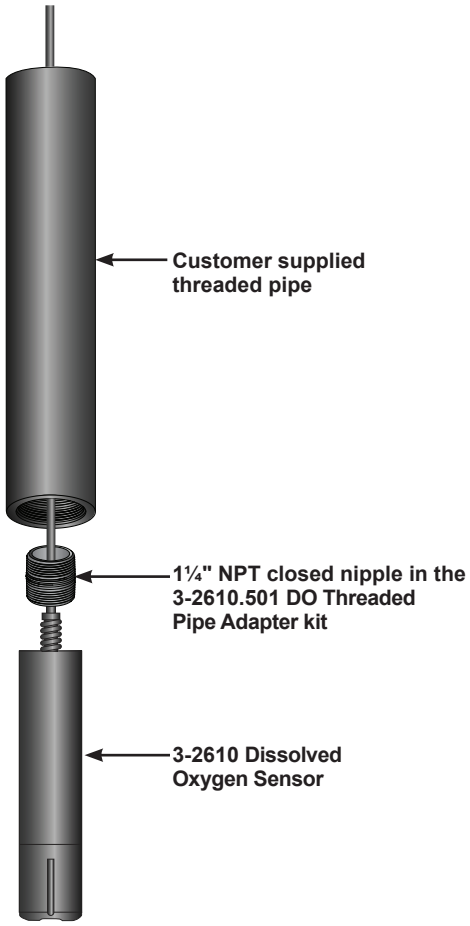

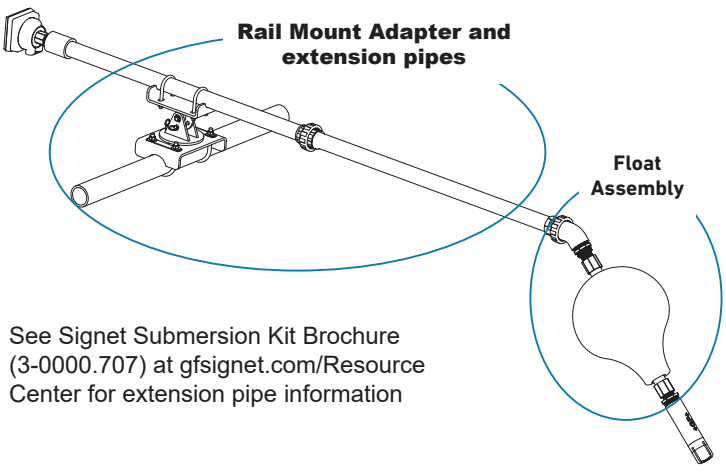

See Signet Submersion Kit Brochure (3-0000.707) at gfsignet.com/Resource Center for extension pipe information

Ordering Information

2610 Optical DO Sensor

Mfr. Part No	Code	Description
3-2610-51	159 001 849	Optical DO Sensor (0.2 to 20 ppm) with S^3L, Modbus, and 4 to 20 mA output

Accessories and Replacement Parts

Mfr. Part No	Code	Description
3-2610.394	159 310 301	Replacement Optical Dissolved Oxygen Sensor Cap (0.2 to 20 ppm) for Gen II 3-2610-51 DO Sensor
3-2610.392	159 310 122	Replacement Optical Dissolved Oxygen Sensor Cap (0.2 to 20 ppm) for 3-2610-31 and 3-2610-41 DO Sensors
3-2610.501	159 500 413	DO Threaded Pipe Adapter kit, includes one each: 2 in. male NPT pipe adapter, 1¼ in. closed nipple, ¾ in. closed nipple.
3-2610.312	Special*	Rail Mount Adapter and extension pipes for Dissolved Oxygen, pH, ORP, and Conductivity sensors
3-2610.FLT	Special*	Float assembly for Dissolved Oxygen, pH, ORP, and Conductivity sensors
3-2610.81950	Special*	DO Sensor Air-Blast
3-2610.81300	Special*	DO Sensor Anti-Fouling Guard
3-2610.100	Special*	2 in. Tee Assembly, PVC
3-2610.101-01	Special*	3 in. Saddle Assembly
3-2610.101-02	Special*	4 in. Saddle Assembly
3-2610.101-03	Special*	6 in. Saddle Assembly
3-2610.101-04	Special*	8 in. Saddle Assembly

* Special only. Contact GF Signet for more information.



Rail mount adapter, extension pipes and float assembly for Dissolved Oxygen, pH, ORP, and Conductivity sensors.
The rail mount adapter has a dual pivot point which allows any GF Signet sensor pipe assembly (sold separately) to move, both vertically and horizontally, over an open channel, tank, or process weir. Once the sensor is brought out of the solution vertically, a safety pin locks the sensor into position, and the horizontal axis is used to swing the sensor assembly safely outside the process area for maintenance and cleaning. Manufactured out of SS for corrosion resistance.

The GF Signet float assembly allows any Signet electrode to be placed into a process at a specific depth.
The float comes complete with a 1 inch male NPT nipple assembly, which threads into a customer supplied piping system.

Call the factory for ISO piping requirements.



DO Sensor Air-Blast (3-2610-81950)
Attach an air blast adapter to the DO sensor and a 20 psi air source using a ¼" OD tube, this allows the sensor to be cleaned. A 60 second blast every four hours extends the length of time between overall maintenance and cleaning. Wetted material: Acetal, SS set screw



DO Anti Fouling Guard (3-2610-81300)
Reduces biological fouling while improving measurement accuracy and extends the length of time between cleaning of the sensor. Simply attach the copper guard onto the front of the sensor. It is recommended the guard be replaced every 6 months. Wetted material: Delrin, high purity copper

NOTE: Not to be used in Aquatic Applications

+GF+

Georg Fischer Signet LLC, 3401 Aero Jet Avenue, El Monte, CA 91731-2882 U.S.A. • Tel. (626) 571-2770 • Fax (626) 573-2057
For Worldwide Sales and Service, visit our website: www.gfsignet.com • or call (in the U.S.): (800) 854-4090
For the most up-to-date information, please refer to our website at www.gfsignet.com

© Georg Fischer Signet LLC 2019