CALL TOLL FREE 877-742-2878 FOR SALES AND SUPPORT
RETURN TO BurtProcess.com

Signet 2734-2736 pH/ORP Electrodes

General Purpose / Industrial

Compatible with Signet 8900/9900/9950 Instruments



The Signet 2734-2736 pH and ORP electrodes are ideal for a wide range of harsh applications with low concentrations of poisoning ions, and chemicals that react with silver ion, Ag^+. The superior glass formulation provides excellent chemical resistance in acidic and alkaline/caustic environments. The large area PTFE reference junction, salt bridge and reference electrode are constructed to increase the total reference effectiveness, resist chemical attack, help resist coating, and ensure long service life in harsh applications.

The DryLoc® connector with corrosion resistant gold plated contacts readily connects the sensor to the mating 2751 pH/ORP Smart Sensor Electronics. The robust PPS threaded sensor body and choice of flat, bulb pH, or flat ORP sensing elements provide a broad range of chemical compatibility for a wide variety of applications.

There is an optional pH sensing version available for applications with HF. The HF version is for applications where traces of hydrofluoric acid (2% or less) will attack standard pH glass.

The quick temperature response is available in a Pt1000 temperature sensor and allows compatibility with the Signet 8900, 9900 and 9950 instruments.

The sensors incorporate ¾ inch NPT or ISO 7/1-R 3/4 threads for installing into standard pipe-tees. They can also be mounted directly into Signet standard fittings, DN15 to DN100 (½ to 4 inch).

Features

- **Enhanced reference chemistry to resist chemical poisoning and prolong the life of the electrodes in harsh environments**
- **PTFE reference junction resists fouling and chemical attack**
- **Superior pH glass formulation for excellent chemical resistance in acidic and alkaline/ caustic environments**
- **PPS body for broad range of chemical compatibility**
- **Memory chip enabled for access to a range of unique features when connected to the Signet 2751 pH/ORP Smart Sensor Electronics**
- **Patented reference design for exceptional performance***
- **Patented DryLoc® connector with gold plated contacts**
- **Mounts in Signet standard fittings from DN15 to DN100 (½ to 4 in.) or standard pipe fitting, 3/4" NPT or ISO 7/1-R 3/4**
- **Special design allows for installation at any angle, even inverted or horizontal**
- **Quick temperature response**
- **Bulb and flat HF resistant glass available for trace HF, in less than 2% concentration applications**

Applications

- **Water & Wastewater Treatment**
- **Neutralization Systems**
- **Plating Baths**
- **Air Scrubbers**
- **Metal Removal**
- **Process Control**
- **Cooling Towers**

*U.S. Patent Nos.: 6,666,701, 7,799,193 B2, 7,867,371 B2 and 8,211,282 B2

Specifications

General			
Performance	Efficiency	>95% @ 25 °C (77 ° F)	
Operating Range	pH	0 to 14 pH	
	ORP	±2000 mV	
	3-2734-HF, 3-2736-HF	Hydrofluoric acid resistant glass, pH 6 or below; trace HF ≤2%	
Compatibility			
	2751 pH/ORP Smart Sensor Electronics (for 8900, 9900, 9950 , Profibus Concentrator, 4 to 20 mA)		
Temperature Sensor			
	Pt1000	Compatible with Signet 2751 pH/ORP Smart Sensor Electronics for connection to a PLC or to the Signet 8900, 9900 or 9950 instruments and 0486 Profibus Concentrator	
Process Connection			
	¾ in. NPT	ISO 7/1-R ¾	Mounts into Signet fittings
Wetted Materials			
	pH	PPS, glass, PTFE, FKM	
	ORP	PPS, glass, PTFE, FKM, Platinum	
Max. Temperature/Pressure Rating			
Operating Temperature Range		10 °C to 100 °C	50 °F to 212 °F
Operating Pressure Range		0 to 6.9 bar (0 to 100 psi) @ 10 °C to 65 °C (50 °F to 149 °F)	
		Linearity Derated 6.9 to 4.0 bar (100 to 58 psi) @ 65 °C to 100 °C (149 °F to 212 °F)	
Recommended Storage Temperature			
		0 °C to 50 °C	32 °F to 122 °F
The electrode glass will shatter if shipped or stored at temperature below 0 °C (32 °F)			
The performance life of the electrode will shorten if stored at temperatures above 50 °C (122 °F)			
Mounting			
In-line Mounting	Use the sensor threads		
	Use a Signet standard fitting ½ to 4 in.		
	Sensor can be mounted at any angle		
Submersible Mounting	Use threads on model 2751		
	Requires ¾ in. NPT or ISO 7/1-R ¾ male threaded liquid tight extension conduit		
Shipping Weight			
	0.25 kg	0.55 lb	
Standards and Approvals			
	CE, FCC, RoHS compliant, China RoHS		
	Manufactured under ISO 9001, ISO 14001 and ISO 45001		

See Temperature and Pressure graphs for more information

Dimensions

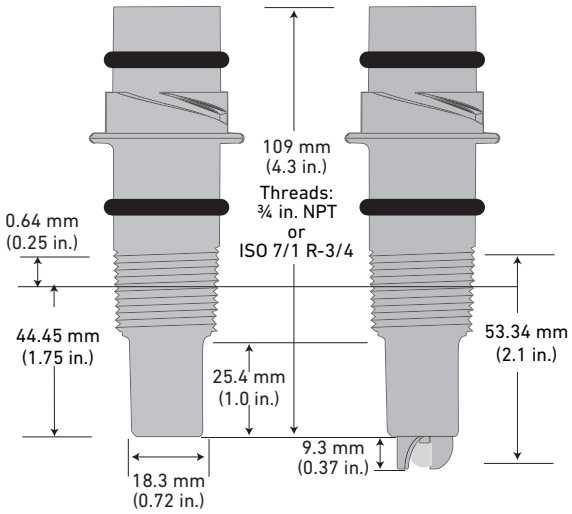

Mounting Angle using GF Signet Fittings
Models 2734-2736 may be mounted at any angle without affecting the performance.
*Avoid locations with air pockets and sediment

When mounting in standard threaded fittings the electrode must be mounted horizontally to 60 degrees below horizontal position only.

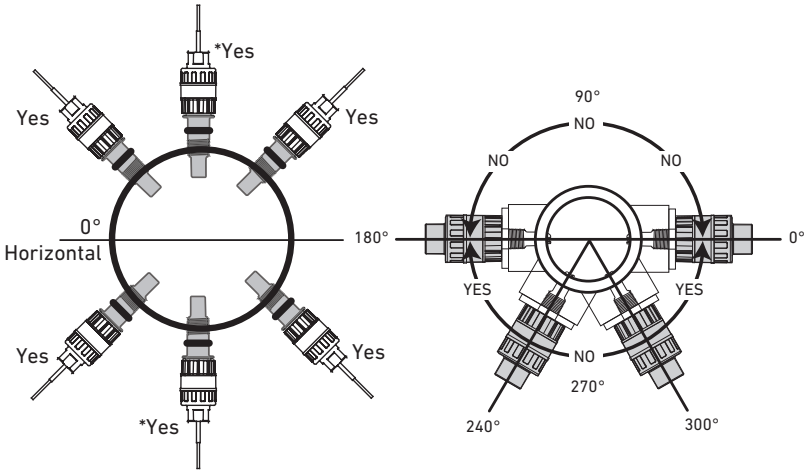

System Overview

Panel Mount	Pipe, Tank, Wall	4 to 20 mA Output	Automation System
Signet Instruments with 2751 Smart Sensor Electronics - 8900 - 9900 - 9950	Signet Instruments with 2751 Smart Sensor Electronics - 9900 and Rear Enclosure	2751 Smart Sensor Electronics with - Customer Supplied Chart Recorder Programmable Logic Controller, or - Programmable Automation Controller	2751 Smart Sensor Electronics with - 0486 Profibus Concentrator and Customer Supplied Programmable Logic Controller or - Programmable Automation Controller

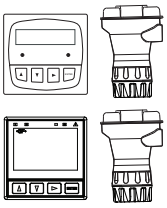

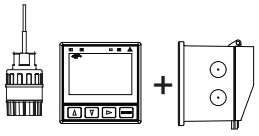

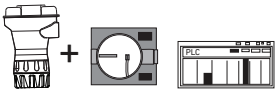

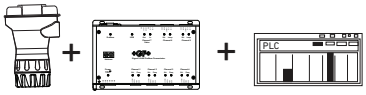

Signet 2734-2736 DryLoc® pH/ORP Electrodes



All sold separately

In-Line Installation -
Signet and threaded 1/2 in to 4 in fittings only

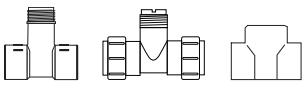

Submersible Installation -
Customer supplied pipe extension or conduit with 3/4 in. NPT or ISO 7/1-R 3/4 threads



Electrode Key Features and Benefits:

1. PPS body for chemical compatibility with most harsh chemicals.
2. Porous PTFE junction resists fouling, chemicals, and build-up.
3. Enhanced reference chemistry to resist poisoning and to prolong the life of the electrodes in harsh media applications.
4. Internal temperature sensor located in the glass stem for a quick temperature response.
5. Memory chip enabled for convenient data storage and access (calibration data, operational data, and manufacturing data), electrode health monitoring via glass impedance measurement when used in connection with the 2751 pH/ORP Smart Sensor Electronics.
6. DryLoc® connector with corrosion resistant gold plated pins for quick and easy sensor removal. Resists moisture and dirt intrusion.
7. Threads for NPT or ISO process connection into reducing tees. Use off-the-shelf GF reducing tees DN20 to DN100 (¾ to 4 in.).
8. Mounts directly into Signet fittings (½ in. to 4 in.) for easy sensor retrofitting.
9. Mount submersed into a tank via the 2751 pH/ORP Smart Sensor Electronics.

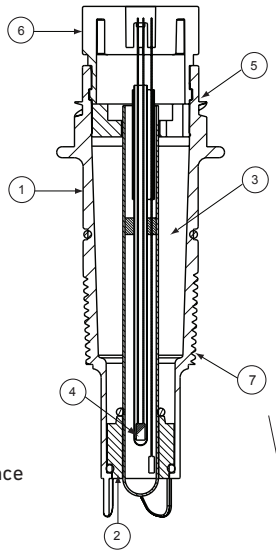

Dual-patented reference design for long life.

For pipes and fittings DN50 (2 inch) or larger, mount 60 degrees below horizontal position only.

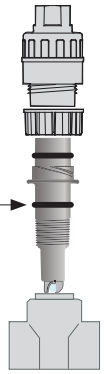

Sensor in threaded reducing tee



⑧ Sensor in Signet fitting

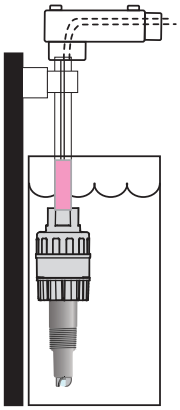

⑨ Sensor in submersible installation

Temperature/Pressure Graph

Note:
The pressure/temperature graph is specifically for the Signet sensor. During system design the specifications of all components must be considered. In the case of a metal piping system, a plastic sensor will reduce the system specification.

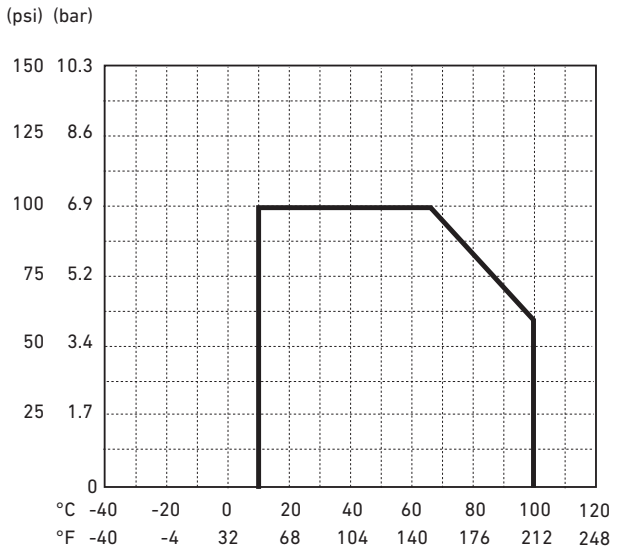

Application Tips

- Use the flat glass electrodes when a self-cleaning feature is desired; especially useful in applications with abrasive chemicals, in-line installations.
- Use the 2736-0X bulb protected electrodes in high pH alkaline/caustic applications (10 to 14 pH) or in applications of low pH range (0 to 3 pH).
- ORP electrodes are generally used for chemical reaction monitoring, not control.
- Ensure that sensor materials are chemically compatible with the process liquid.
- Keep electrode tip wet, avoid air pockets and sediment.

Model 2734-2736 Ordering Notes

1) pH and ORP Sensor Electrodes require connection to model 2751 pH/ORP Smart Sensor Electronics.
2) The 2751 "EasyCal" feature recognizes common pH and ORP buffer values of 4, 7 and 10 pH and +87, +264 and +469 mV for ORP.

Buffer Solutions

3822-7004
3822-7007
3822-7010

Quinhydrone

3822-7115

The Signet pH buffers are ideal for calibration. The liquid solutions are conveniently packaged in one pint (473 ml) bottles. pH buffer kits in powder pillows are available for mixing fresh solutions with water at the time of use.

All pH buffers are color coded for easy identification; 4.01 pH is red, 7.00 pH is yellow, and 10.00 pH is blue. All pH buffers are traceable to NIST standards. The 4.01 and 7.00 buffer solutions can be used to calibrate ORP sensors when saturated with quinhydrone.



Ordering Information

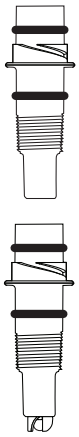

Mfr. Part No.	Code	Tip Design	Process Connection
pH Electrodes - Temperature Element Pt1000; use with 2751 pH/ORP Smart Sensor Electronics*			
3-2734-00	**159 001 774**	Flat	3/4 in. NPT, Thread
3-2734-01	**159 001 775**	Flat	ISO 7/1-R 3/4 Thread
3-2734-HF-00	**159 001 776**	Flat, HF Resistant[1]	3/4 in. NPT, Thread
3-2734-HF-01	**159 001 777**	Flat, HF Resistant[1]	ISO 7/1-R 3/4 Thread
3-2736-00	**159 001 778**	Bulb	3/4 in. NPT, Thread
3-2736-01	**159 001 779**	Bulb	ISO 7/1-R 3/4 Thread
3-2736-HF-00	**159 001 780**	Bulb, HF Resistant[1]	3/4 in. NPT, Thread
3-2736-HF-01	**159 001 781**	Bulb, HF Resistant[1]	ISO 7/1-R 3/4 Thread
ORP Electrodes - Compatible with 2751 pH/ORP Smart Sensor Electronics			
3-2735-60	**159 001 782**	Platinum, Flat, 10 KΩ ID, ¾ in. NPT	3/4 in. NPT, Thread
3-2735-61	**159 001 783**	Platinum, Flat, 10 KΩ ID, ISO 7/1 R¾	ISO 7/1-R 3/4 Thread

*The 2751 pH/ORP Smart Sensor Electronics has a digital (S^3L) output which is used with 8900, 9900 or 9950
instruments, and Profibus Concentrator.
It also has a 4 to 20 mA output for connections to PLC's, data recorders, etc.

[1]HF resistant ≤2% HF

Note:
The 2734 and 2736 pH electrodes are **not** compatible with the Signet 2760 Preamplifier.

Accessories and Replacement Parts

Mfr. Part No.	Code	Description
1220-0021	**198 801 000**	O-ring, FKM (2 required per sensor)
3-2700.395	**159 001 605**	Calibration Kit: includes 3 polypropylene cups, box used as cup stand, 1 pint (473 ml) pH 4.01, 1 pint (473 ml) pH 7.00
3822-7115	**159 001 606**	20 gm Bottle Quinhydrone for ORP Calibration (must use pH 4.01 and/or pH 7.00 buffer solutions)
3-2759	**159 000 762**	pH/ORP System Tester (adapter cable sold separately)
3-2759.391	**159 000 764**	2759 DryLoc Adapter Cable (for use with 2751 and 2760)
3-0700.390	**198 864 403**	pH Buffer Kit (1 each 4, 7, 10 pH buffer in powder form, makes 50 ml of each)
3822-7004	**159 001 581**	pH 4.01 Buffer Solution, 1 pint (473 ml) bottle
3822-7007	**159 001 582**	pH 7.00 Buffer Solution, 1 pint (473 ml) bottle
3822-7010	**159 001 583**	pH 10.00 Buffer Solution, 1 pint (473 ml) bottle
3800-5000	**159 838 107**	3.0M KCl Storage Solution for pH and ORP, 1 pint (473 ml) bottle
3-2700.397	**159 001 870**	Protective Cap for pH/ORP Electrodes, 5 pieces
3-2700.398	**159 001 886**	O-ring Lubricant Kit (5 packs of Super Lube, 1cc each)

3-2734.099 Rev H (01/21)
© Georg Fischer Signet LLC
3401 Aero Jet Avenue, El Monte, CA 91731-2882 U.S.A. • Tel. (626) 571-2770 • Fax (626) 573-2057 • www.gfsignet.com • e-mail: signet.ps@georgfischer.com
Specifications subject to change without notice. All rights reserved. All corporate names and trademarks stated herein are the property of their respective companies.