CALL TOLL FREE 877-742-2878 FOR SALES AND SUPPORT
RETURN TO BurtProcess.com

+GF+

English

GF 2760 DryLoc® pH/ORP Preamplifier

3-2760.090 Rev. 10 03/21

Product Manual



Description

The GF 2760 pH/ORP Preamplifiers with DryLoc® connectors are part of GF's growing line of sensors for industrial fluid measurement and control.
There are two styles of preamplifiers, and each is available with NPT or ISO threads at the cable outlet. They all connect to four different families of pH and ORP electrodes to supply an amplified mV (analog) signal to GF instruments.

Table of Contents

Warranty Statement 2
Product Registration 2
Safety Information 2
Chemical Compatibility 2
Specifications 2
Dimensions 3
In-Line Assembly and Installation 3-4
Wet-Tap Assembly and Installation 4
Submersible Sensor assembly and Installation 5
Wiring to GF Instruments 6
Wiring from DryLoc Preamplifier to Others Equipment 7
Ordering Information 8

- English
- Deutsch
- Français
- Español

Warranty Information

Refer to your local Georg Fischer Sales office for the most current warranty statement.

All warranty and non-warranty repairs being returned must include a fully completed Service Form and goods must be returned to your local GF Sales office or distributor. Product returned without a Service Form may not be warranty replaced or repaired.

GF products with limited shelf-life (e.g. pH, ORP, chlorine electrodes, calibration solutions; e.g. pH buffers, turbidity standards or other solutions) are warranted out of box but not warranted against any damage, due to process or application failures (e.g. high temperature, chemical poisoning, dry-out) or mishandling (e.g. broken glass, damaged membrane, freezing and/or extreme temperatures).

Safety Information

1. Depressurize and vent system prior to installation or removal.
2. Confirm chemical compatibility before use.
3. Do not exceed maximum temperature/pressure specifications.
4. Wear safety goggles or faceshield during installation/service.
5. Do not alter product construction.
6. When using chemicals or solvents care should be taken and appropriate eye, face, hand, body, and/or respiratory protection should be used.

	**Caution / Warning / Danger** Indicates a potential hazard. Failure to follow all warnings may lead to equipment damage, injury, or death
	**Electrostatic Discharge (ESD) / Electrocution Danger** Alerts user to risk of potential damage to product by ESD, and/or risk of potential of injury or death via electrocution.
	**Personal Protective Equipment (PPE)** Always utilize the most appropriate PPE during installation and service of GF products.
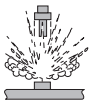	**Pressurized System Warning** Sensor may be under pressure, take caution to vent system prior to installation or removal. Failure to do so may result in equipment damage and/or serious injury.
	**Hand Tighten Only** Overtightening may permanently damage product threads and lead to failure of the retaining nut.
	**Do Not Use Tools** Use of tool(s) may damage product beyond repair and potentially void product warranty.

Chemical Compatibility



WARNING
The retaining nuts of certain pH and ORP sensors and preamplifiers are not designed for prolonged contact with aggressive substances. Strong acids, caustic substances and solvents or their vapor may lead to failure of the retaining nut, ejection of the sensor and loss of the process fluid with possibly serious consequences, such as damage to equipment and serious personal injury. Retaining nuts that may have been in contact with such substances, e.g. due to leakage or spilling, must be replaced.

Specifications

General

Compatible Electrodes
GF DryLoc Electrodes 2724-2726, 2756-WTP- 2757-WTP, 2744-2747, 2774-2777

Compatible Instruments
Preamplifier models to
GF 5700, 8750 ..... 2760-1, -2, -11, -21

Response Time (includes response time of electrodes):
pH ..... Electrode dependent
ORP ..... Application dependent
Temperature, τ ..... 20 sec.

Electrical (2760-1, -2,-11, -21 Preamplifiers)

Maximum Offset ..... ± 7 mV
Input Impedance, Z..... > 1011 Ω
Supply Voltage (V+ to V–) .... 6 to 12 VDC
Current consumption ..... < 1 mA

Environmental

Enclosure Rating ..... 2760-1, -2, NEMA 6P/IP68
2760-11, -21, NEMA 4
with electrode and watertight conduit and/or extension pipe connected

Materials
Submersible versions..... CPVC (Gray)
In-Line versions..... PBT (Yellow)

Cable ..... 4.6 m (15 ft) 6-conductor w/shield, 22 AWG
Maximum cable: ..... 122 m (400 ft)
Shipping Weight: ..... 0.64 kg (1.41 lb)

Operating Temperature..... 0 °C to 85 °C (32 °F to 185 °F)
Storage Temperature..... –20 °C to 85 °C (–4 °F to 185 °F)
Relative Humidity..... 0 to 95%, non-condensing (without electrode connected)

Standards and Approvals

Manufactured under ISO 9001, ISO 14001 and ISO 45001
China RoHS (Go to www.gfps.com for details)

Dimensions

3-2760-1 Preamplifier, Sub, NPT
3-2760-2 Preamplifier, Sub, ISO

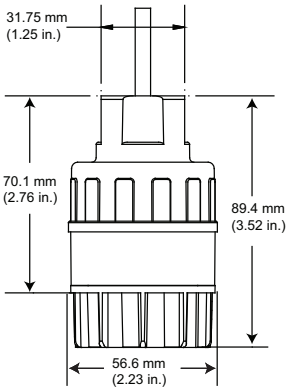

3-2760-11 Preamplifier, In-line, NPT
3-2760-21 Preamplifier, In-line, ISO

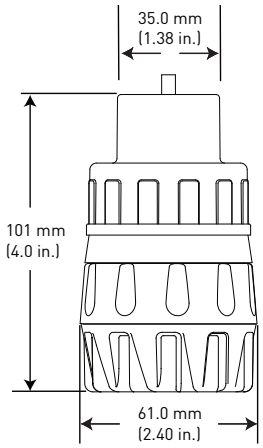

In-line Assembly and Installation

2760 In-Line models used with 2724-2726 series electrodes:

1. The 2724-2726 can use a GF installation fitting. Electrodes are sealed by the O-ring when it is installed into a GF installation fitting.
2. The lower threaded nut is required to attach the electrode to the installation fitting when using a GF fitting.



HAND-TIGHTEN THE THREADED NUT ONTO THE INSTALLATION FITTING. DO NOT USE TOOLS! DO NOT USE THREAD SEALANT OR LUBRICANTS ON THE FITTING THREADS OR THE SENSOR CAP.

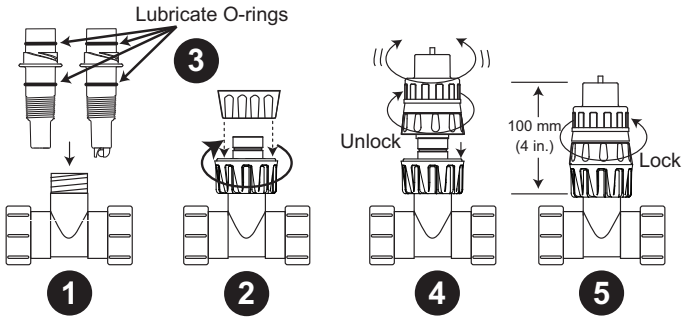

3. Lubricate O-rings with a non-petroleum based, viscous lubricant (grease) compatible with the system.
4. Seat the 2760 DryLoc connector onto the top of the electrode.
   Open the DryLoc connector by turning the upper locking ring ¼-turn clockwise.
5. Turn the locking ring ¼-turn counter-clockwise to lock the preamplifier in place. The mechanism will “click” when it is locked. When fully assembled the 2760 will stand about 100 mm (4 in.) above the installation fitting.

2760 In-Line models used with 2744-2747 or 2774-2777 series electrodes:

BEFORE YOU START:
2744-2747: Install a 1 in. NPT pipe tee into the process line.
2774-2777: Install a ¾-in. reducing tee into the process line.

1. Wrap the process threads on the electrode with an appropriate sealant (example: PTFE tape) to create a water-tight connection. **HAND-TIGHTEN** the electrode into the installation fitting. **DO NOT USE TOOLS!**
   NOTE: The lower threaded nut may be dropped onto the top of the electrode or it may be discarded. It is not used with these electrodes.
2. Lubricate O-rings with a non-petroleum based, viscous lubricant (grease) compatible with the system.
3. Seat the 2760 DryLoc connector onto the top of the electrode.
   Open the DryLoc connector by turning the upper locking ring ¼-turn clockwise.
4. Turn the locking ring ¼-turn counter-clockwise to lock the preamplifier in place. The mechanism will “click” when it is locked. When the 2760 Preamplifier is fully assembled with one of the threaded electrodes (274X and 277X models) it will stand approximately 178mm (7 in.) from the process threads to the top of the preamplifier.

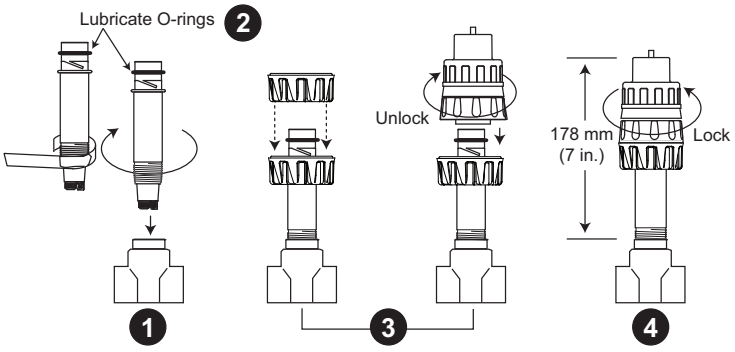

In-line Assembly and Installation

2760 Submersible models used as in-line system:
The Submersible 2760 design can also be used in-line when using the 2724-2726, 2744-2747 series or the 2774-2777 series electrodes.

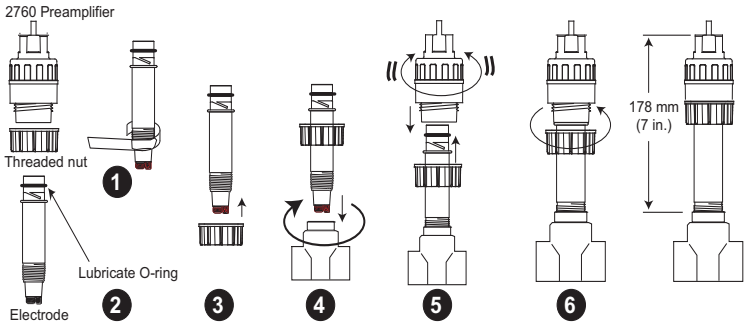

BEFORE YOU START:
2744-2747: Install a 1 in. NPT pipe tee in the process line. 2774-2777 and 2724-2726: Install a ¾-in. reducing tee in the process line. **DO NOT** install in a ¾-inch tee or probe will be damaged.

1. Wrap the process threads on the electrode with an appropriate sealant (example: PTFE tape) to create a water-tight connection.
2. Lubricate O-rings with a non-petroleum based, viscous lubricant (grease) compatible with the system.
3. Remove the threaded nut from the preamplifier and place it around the electrode from the bottom as illustrated.
4. **HAND-TIGHTEN** the electrode into the installation fitting. **DO NOT USE TOOLS!**
5. Seat the 2760 DryLoc connector onto the top of the electrode.
6. Lift the threaded nut up and thread it hand-tight onto the preamplifier.
   When the 2760 Preamplifier is fully assembled with one of the threaded electrodes (274X and 277X models) it will stand approximately 178 mm (7 in.) from the process threads to the top of the preamplifier.

- The 2760 Preamplifier signal can be routed to a GF 5700 ProPoint pH Monitor, or to any model of the 3-8750 pH Transmitter.
- If the preamplifier cable must be extended beyond the standard 4.6m (15 ft) that is supplied with the 2760, use a junction box to terminate the wires.
  Note: Do not extend the 2760 cable more than 120 m (400 ft).

Wet-Tap Assembly and Installation

The 2760 DryLoc Preamplifier can be used to connect GF 275X Wet-Tap electrodes to a pH or ORP instrument.

1. Select the process fitting.
- Select a low profile installation saddle (customer-supplied) with a 1½ in. or 2 in. outlet (depending on 3719 model ordered).
- The 3719 is available with NPT or ISO thread options.
- The 3719 can also be adapted to fit into tee fittings. Refer to the 3719 pH Wet-Tap instructions for detailed information.

2. Install the Wet-Tap and the electrode.
- Install the 3719 into the fitting, then insert the electrode into the assembly.

3. Attach the preamplifier to the electrode.
- Attach the 3-2760-11 or -21 Preamplifier to the DryLoc fitting at the top of the electrode.

4. Connect the 2760 Preamplifier to the instrument.
- The 2760 Preamplifier signal can be routed to any 5700 or 8750 pH/ORP instrument (see Pg. 5).

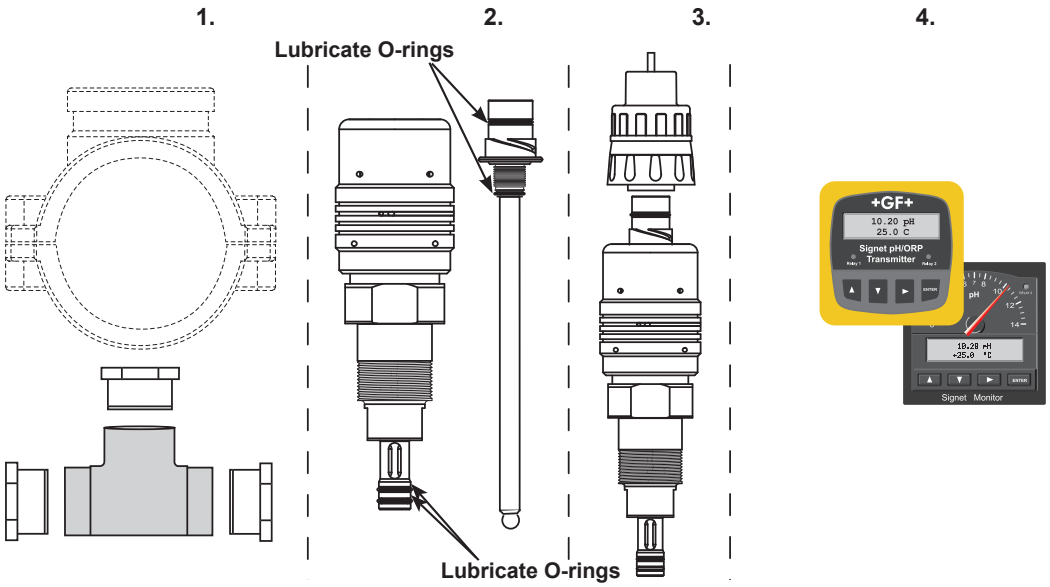

Submersible Sensor Assembly and Installation

The submersible 2760 can be installed in a tank or vessel if conditions are within pressure and temperature specifications. The 2760 is able to withstand fluid temperatures up to 85 °C (185° F), but the electrode tolerances vary. Check the specifications of each component before installation.

1. Insert any DryLoc electrode into base of the 2760. Lubricate O-rings with a non-petroleum based, viscous lubricant (grease) compatible with the system.

2. Thread retaining cap over electrode and hand-tighten onto 2760.
   - Keep the DryLoc electrical interconnection between electrode and preamplifier dry and clean at all times.

3. Attach ¾ in. watertight pipe to the top of the 2760. Secure the threaded connection to prevent any leakage.
   - Fill the lower 75-100 mm (3 to 4 in.) of conduit or extension pipe with a flexible sealant such as silicone to prevent liquid accumulation on the back seal of the 2760.

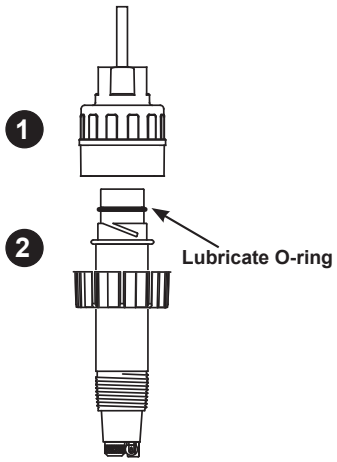

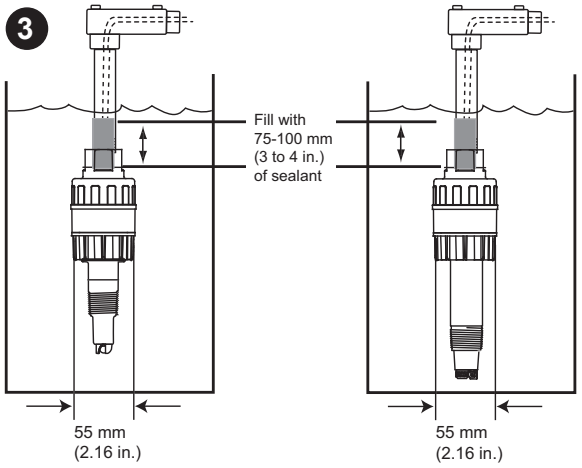

Use standard installation hardware to connect the submersible 2760 directly to external equipment.

OR

The 8052-1 NPT Mount Junction box connects to ¾ in. pipe or conduit and provides convenient wiring termination.

OR

The 8050-1 Universal Mount junction box mounts flat onto a wall or can be strapped to a post or pipe.

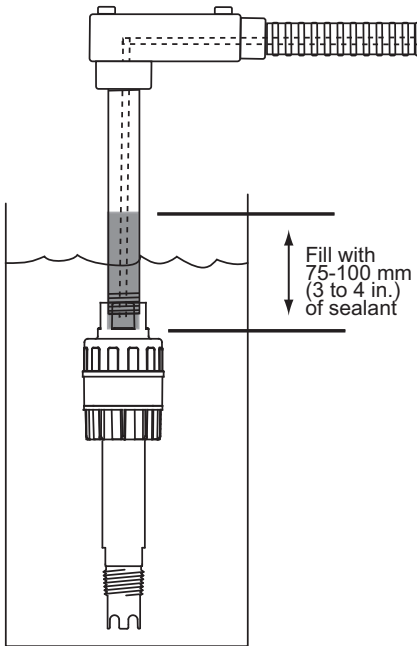

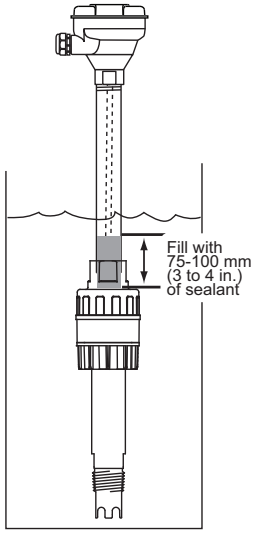

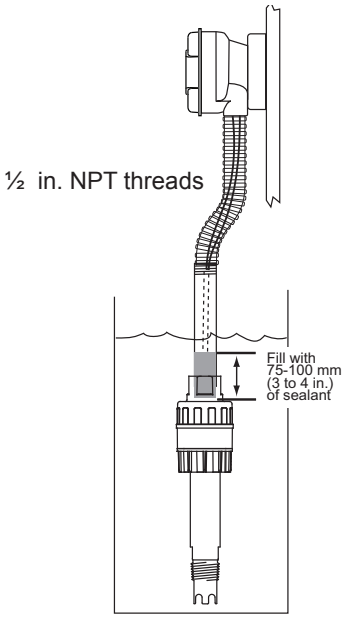

Wiring to GF Instruments

Any of these electrodes can be connected to the GF ProPoint and ProcessPro pH instruments using the 3-2760-1(X) or -2(X) Preamplifiers.

Wiring diagrams illustrate the actual terminals on these products for convenience.

GF 8750-X
ProcessPro pH/ORP Transmitter



GF 5700
ProPoint pH/ORP Monitor

Standard output,
Signet installation fittings

3-2724-10, -11
3-2725-60, -61
3-2726-10, -11
3-2726-HF-10, -11
3-2726-LC-10, -11
3-2756-WTP-1
3-2757-WTP

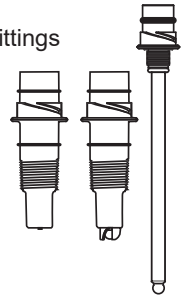

Standard output,
¾ in. process connector.

3-2774
3-2775
3-2776
3-2777



Differential output,
1 in. process connector.

3-2744-1
3-2745-1
3-2746-1
3-2747-1



3-5700 pH/ORP Monitor

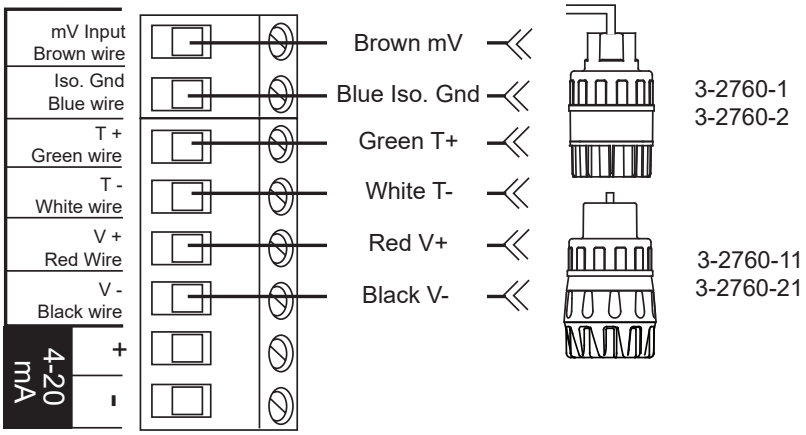

ProcessPro pH/ORP Transmitter

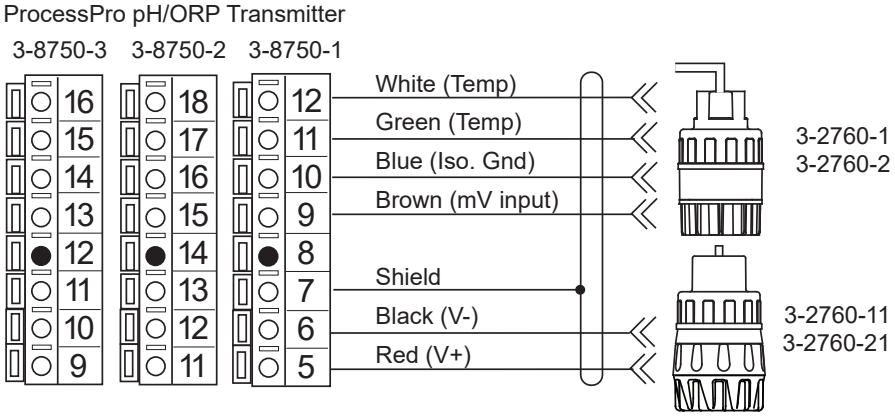

Connect this terminal ● to Earth GND to reduce electrical interference.

Wiring from 2760 DryLoc Preamplifier to Other Manufacturer's Equipment

The 2760-1/-2 Preamplifier and electrode options may be used with third party equipment if the equipment can process the AMPLIFIED mV signal for pH and is compatible with one of the temperature compensation options. (3 KΩ or Pt1000).
Refer to the manufacturer's manual for wiring details. Other products may use different terms to identify the function of each conductor.

GF Combination pH Electrodes

3-2724-10 (3 KΩ, NPT)
3-2724-11 (3 KΩ, ISO)

3-2726-10 (3 KΩ, NPT)
3-2726-11 (3 KΩ, ISO)
3-2726-HF-10 (HF Resist, 3 KΩ, NPT)
3-2726-HF-11 (HF Resist, 3 KΩ, ISO)
3-2726-LC-10 (Low Cond, 3 KΩ, NPT)
3-2726-LC-11 (Low Cond, 3 KΩ, ISO)

3-2774 (3 KΩ TC)

3-2776 (3 KΩ TC)

Combination ORP (Redox) Electrodes

3-2725-60 (10 KΩ ID, NPT)
3-2725-61 (10 KΩ ID, ISO)

3-2757-WTP (10 KΩ ID)

3-2775 (10 KΩ ID)

3-2777 (10 KΩ ID)

DryLoc Preamplifier, Submersible
3-2760-1
3-2760-2

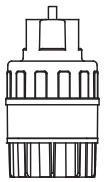

DryLoc Preamplifier, In-Line
3-2760-11
3-2760-21

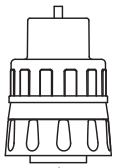

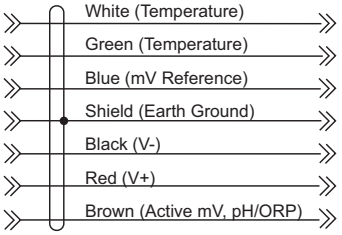

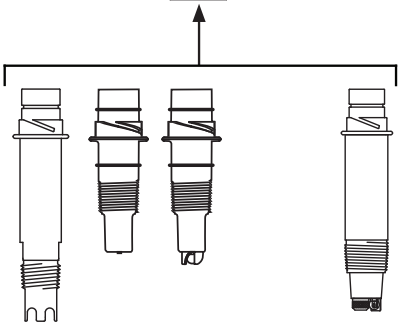

Differential pH Electrodes
3-2744-1 (3 KΩ RTD)

3-2746-1 (3 KΩ RTD)

Differential ORP (Redox) Electrodes
3-2745-1 (10 KΩ ID)

3-2747-1 (10 KΩ ID)

Ordering Information

Mfr. Part No.	Code	Description
3-2760-1	159 000 939	Submersible Preamplifier with ¾ in. NPT threads and 4.6 m (15 ft) cable
3-2760-2	159 000 940	Submersible Preamplifier with ¾ in. ISO 7/1R threads and 4.6 m (15 ft) cable
3-2760-11	159 001 367	In-line Preamplifier with ¾ in. NPT threads and 4.6 m (15 ft) cable
3-2760-21	159 001 368	In-line Preamplifier with ¾ in. ISO 7/1R threads and 4.6 m (15 ft) cable

Accessories and Replacement Parts

Calibration Tools		
3-2759	159 000 762	pH/ORP System Tester (adapter cable sold separately)
3-2759.391	159 000 764	2759 Adapter Cable for use w/2760 DryLoc Preamplifier
3-0700.390	198 864 403	pH Buffer Kit (1 each 4, 7, 10 pH buffer in powder form, makes 50 mL)
5523-0624	159 000 636	Cable, 6 conductor, 24 AWG shielded
3822-7004	159 001 581	pH 4.01 buffer solution, 1 pint (473 ml) bottle
3822-7007	159 001 582	pH 7.00 buffer solution, 1 pint (473 ml) bottle
3822-7010	159 001 583	pH 10.00 buffer solution, 1 pint (473 ml) bottle
3822-7115	159 001 606	20 gram bottle Quinhydrone for ORP calibration
3-2700.395	159 001 605	Calibration kit: included 3 Polypropylene cups, box as cup stand, 1 pint pH 4.01, 1 pint pH 7.00
Special Request		NIST Traceable Certificate

Electrodes

DryLoc pH Electrodes		
3-2724-10	159 001 547	Flat glass pH Electrode, 3 KΩ RTD, ¾ in. NPT or GF fittings
3-2724-11	159 001 548	Flat glass pH Electrode, 3 KΩ RTD, ISO 7/1 R¾ or GF fittings
3-2726-10	159 001 555	Bulb glass pH Electrode, 3 KΩ RTD, ¾ in. NPT or GF fittings
3-2726-11	159 001 556	Bulb glass pH Electrode, 3 KΩ RTD, ISO 7/1 R¾ or GF fittings
3-2726-HF-10	159 001 551	Bulb glass pH Electrode, 3 KΩ RTD, HF resistant, ¾ in. NPT or GF fittings
3-2726-HF-11	159 001 552	Bulb glass pH Electrode, 3 KΩ RTD, HF resistant, ISO 7/1 R¾ or GF fittings
3-2726-LC-10	159 001 559	Bulb glass pH Electrode, 3 KΩ RTD, Low conductivity, ¾ in. NPT or GF fittings
3-2726-LC-11	159 001 560	Bulb glass pH Electrode, 3 KΩ RTD, Low conductivity, ISO 7/1 R¾ or GF fittings
3-2744-1	159 001 944	Differential pH Electrode, 3 KΩ RTD, 1 in. NPT process connection
3-2746-1	159 001 911	Differential pH Electrode, 3 KΩ RTD, 1 in. NPT process connection
3-2774	159 000 955	Flat glass pH Electrode, 3 KΩ RTD, ¾ in. NPT process connection
3-2776	159 000 959	Flat glass pH Electrode, 3 KΩ RTD, ¾ in. NPT process connection
DryLoc ORP (Redox) Electrodes		
3-2725-60	159 001 561	Flat ORP Electrode, 10KΩ ID, ¾ in. NPT or GF installation fittings
3-2725-61	159 001 562	Flat ORP Electrode, 10KΩ ID, ¾ in. ISO 7/1 R¾ or GF installation fittings
3-2745-1	159 001 913	Differential ORP (Redox) Electrode, 10 KΩ ID, 1 in. NPT process connection
3-2747-1	159 001 914	Differential ORP (Redox) Electrode, 10 KΩ ID, 1 in. NPT process connection
3-2775	159 000 957	Flat ORP (Redox) Electrode, 10 KΩ ID, ¾ in. NPT process connection
3-2777	159 000 961	Bulb ORP (Redox) Electrode, 10 KΩ ID, ¾ in. NPT process connection
3-2757-WTP	159 001 391	Flat, Wet-Tap ORP Electrode, 10 KΩ ID

+GF+

Georg Fischer Signet LLC, 3401 Aero Jet Avenue, El Monte, CA 91731-2882 U.S.A. • Tel. (626) 571-2770 • Fax (626) 573-2057
For Worldwide Sales and Service, visit our website: www.gfps.com • Or call (in the U.S.): (800) 854-4090
For the most up-to date information, please refer to our website at www.gfps.com

3-2760.090 Rev. 10 03/21 English
© Georg Fischer Signet LLC 2021