Check Valve Type 369



Product description

GF Piping Systems flap traps of Type 369 are designed especially for large installations, require little servicing and effort and are extremely compact. The design is optimized for installations between ISO/DIN as well as ANSI/BS connections. The flap traps can be installed either horizontally or vertically. If a medium flows in the flow direction, it opens up the plate of the flap trap, allowing the medium to flow through. If the medium pressure falls below a certain threshold, the flap closes again.

Function

After installation in piping systems, the flap traps of Type 369 are intended exclusively for preventing media from flowing back within the allowable pressure and temperature range.

The flap traps are available with or without a return spring made of V4A or Hastelloy. They are suitable for horizontal or vertical installation.

Applications

- Water treatment
- Chemical process industry

Benefits/features

- Self-closing check valve for horizontal or vertical installation (water column / gravity / optional spring)
- Suitable for installation between both ISO/DIN and ANSI/BS connecting elements
- Simple installation between standard flanges
- Only highly resistant materials
- Robust and maintenance-free design
- All parts that come into contact with media are made in highly resistant plastics and elastomers
- Optimized special flange gasket made of EPDM or FKM already installed in the valve housing are suited for fluted connecting elements
- Disc seals are available in EPDM or FKM and are installed in plates
- For pulsating flow, flap traps with reset spring (made of stainless steel V4A or Hastelloy C) are available. This reduces noise development

Flow media

Media that are free of foreign particles, media containing solids, as well as crystallizing, viscous, thick and gaseous media.

Technical data

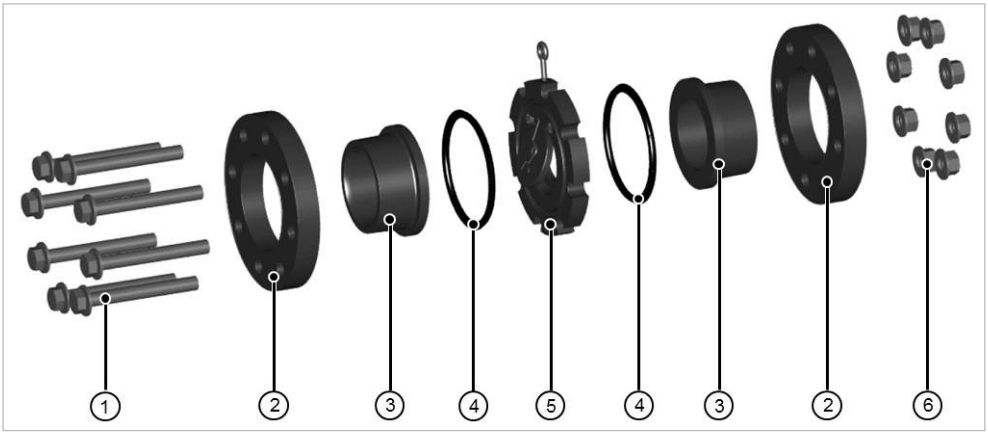

① Screw and washer
② Flange
③ Valve end / flange adapter
④ Flange seal
⑤ Flap trap
⑥ Nut and washer

Specification	
Dimensions	d40/DN32 – d315/DN300 / 1¼" – 12" to DN600 / 24" available upon request
	PVC-U, PP-H, PVDF
Gasket materials	EPDM, FKM
Pressure level	PN6/PN10
Connections	Flange joints

Kv 100 values

DN (mm)	Inch (inch)	d (mm)	Kv 100 (l/min) (Δp = 1 bar)	Cv 100 (US gal./min) (Δp = 1 psi)	Kv 100 (m^3/h) (Δp = 1 bar)
32	1¼	40	270	18.9	16.2
40	1½	50	370	25.9	22.2
50	2	63	900	63	54
65	2½	75	1140	79.8	68
80	3	90	1870	130.9	112
100	4	110	2870	200.9	172
125	5	140	5700	399.0	342
150	6	160	6900	483.0	414
200	8	225	18800	1316.0	1128
250	10	280	25000	1750.0	1500
300	12	315	27600	1932.0	1656

PP with outlet flange adapter PP/PE, SDR11, PN10

DN (mm)	Inch (inch)	d (mm)	Kv 100 (l/min) (Δp = 1 bar)	Cv 100 (US gal./min) (Δp = 1 psi)	Kv 100 (m^3/h) (Δp = 1 bar)
32	1¼	40	280	19.6	16.8
40	1½	50	340	23.8	20.4
50	2	63	610	42.7	36.6
65	2½	75	1230	86.1	74
80	3	90	2610	182.7	157
100	4	110	3930	275.1	236

DN (mm)	Inch (inch)	d (mm)	Kv 100 (l/min) (Δp = 1 bar)	Cv 100 (US gal./min) (Δp = 1 psi)	Kv 100 (m^3/h) (Δp = 1 bar)
125	5	140	7120	498.4	427
150	6	160	9180	642.6	551
200	8	225	17600	1232.0	1056
250	10	280	24400	1708.0	1464
300	12	315	31900	2233.0	1914

PVDF, pipe PN16 SDR26, PN10 SDR33 from d90

DN (mm)	inch (inch)	d (mm)	Kv 100 (l/min) (Δp = 1 bar)	Cv 100 (US gal./min) (Δp = 1 psi)	Kv 100 (m^3/h) (Δp = 1 bar)
32	1¼	40	280	19.6	16.8
40	1½	50	340	23.8	20.4
50	2	63	610	42.7	36.6
65	2½	75	1230	86.1	74
80	3	90	2610	182.7	157
100	4	110	3930	275.1	236
125	5	140	7120	498.4	427
150	6	160	9180	642.6	551
200	8	225	17 600	1232.0	1056
250	10	280	24 400	1708.0	1464
300	12	315	31 900	2233.0	1914

Pressure-temperature diagrams

PVC-U

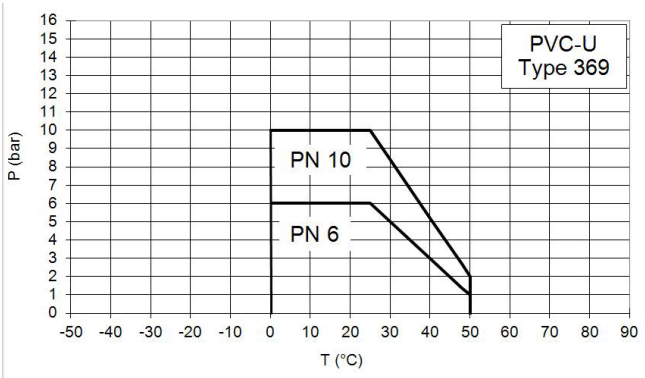

PP-H

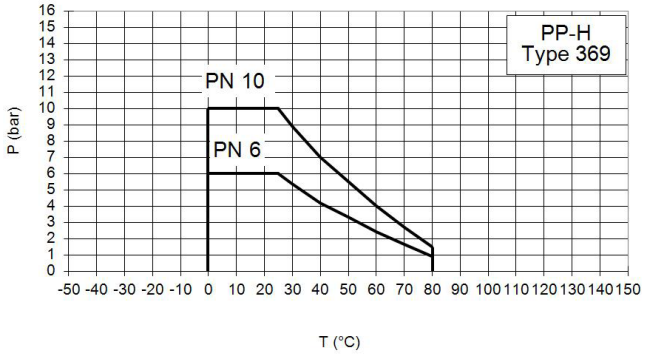

PVDF

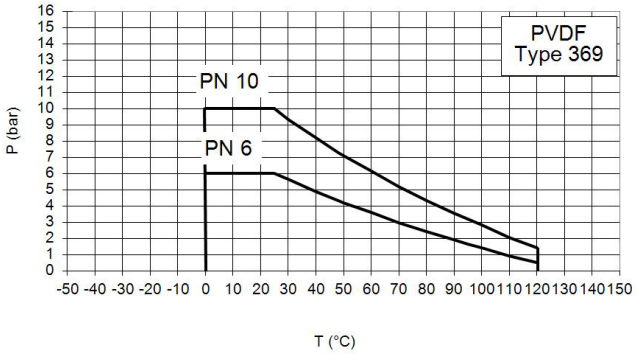

T Temperature (°C, °F)
P Permissible pressure (bar, psi)

Pressure losses

PVC-U, pipe PN10

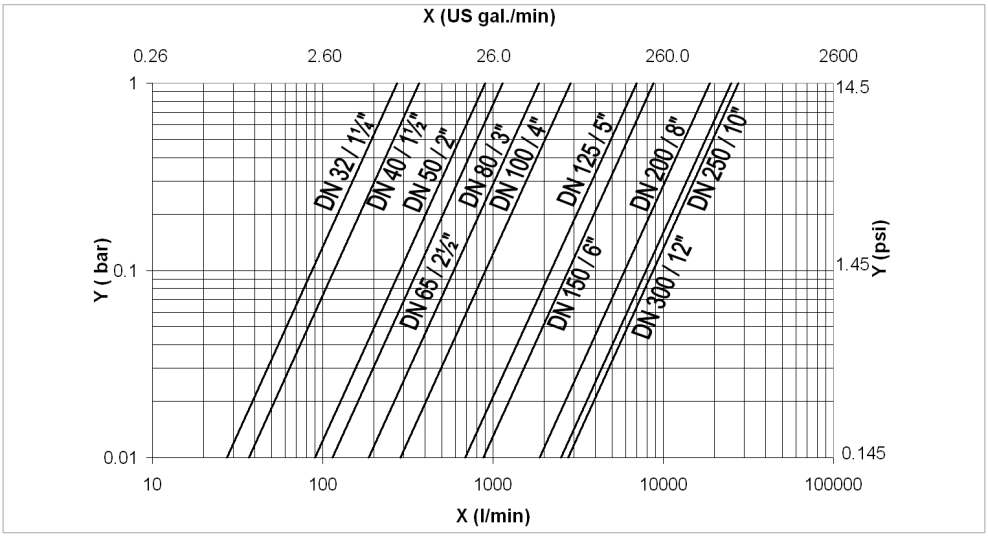

Medium: water 20 °C
X Flow rate (l/min, US gal/min)
Y Pressure loss Δp (bar, psi)

PP with outlet flange adapter PP/PE, SDR11 (PN10)

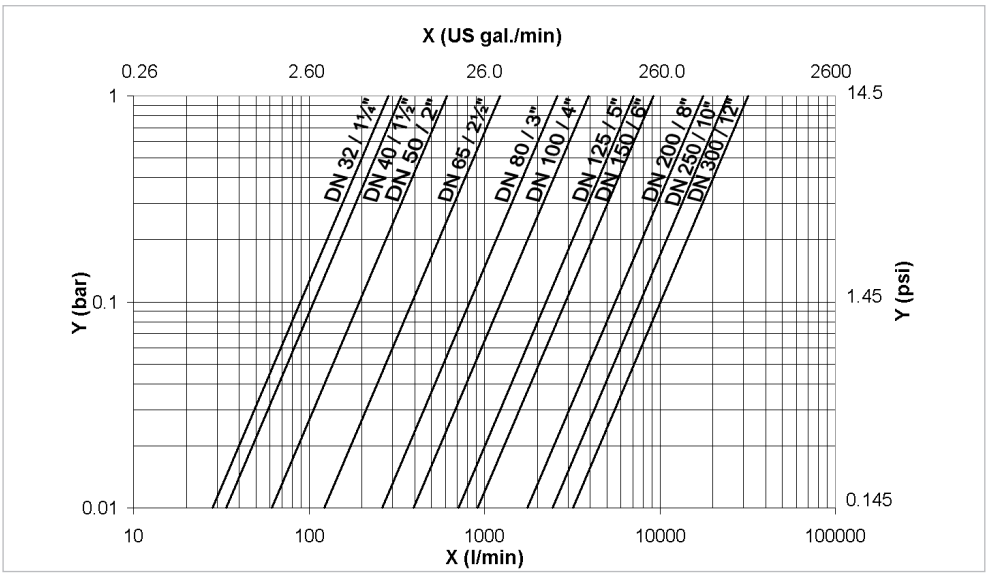

Medium: water 20 °C
X Flow rate (l/min, US gal/min)
Y Pressure loss Δp (bar, psi)

PVDF, pipe PN10

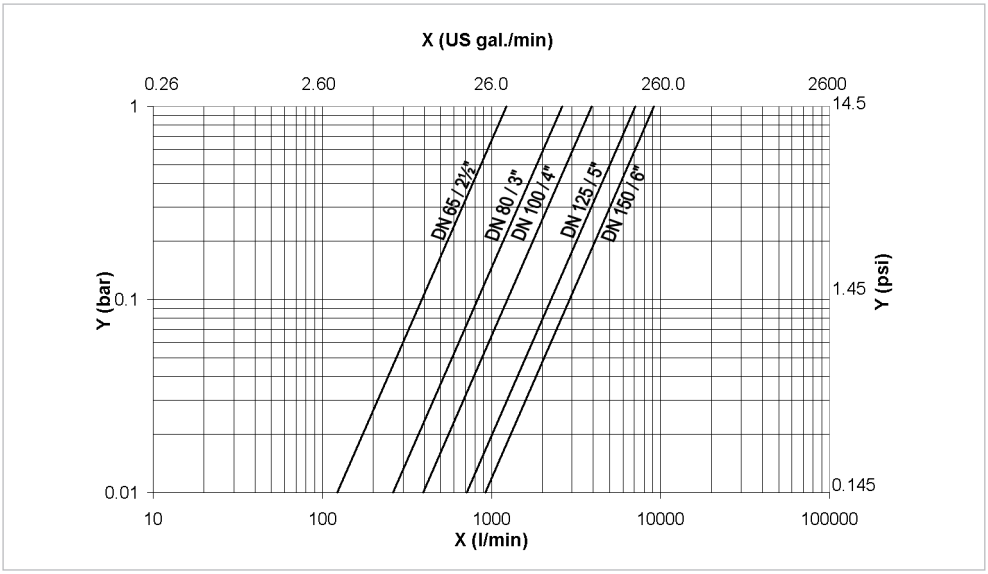

Medium: water 20 °C
X Flow rate (l/min, US gal/min)
Y Pressure loss Δp (bar, psi)

Opening pressure / leak-tightness

DN (mm)	Opening pressure (mbar)				Tightness of water column (m)	
	Vertical without spring	Vertical with spring	Horizontal without spring	Horizontal with spring	PVC-U, PVDF	PP
32	10	30	1	20	2	3
40	10	30	1	20	2	3
50	10	30	1	20	2	3
65	10	30	1	20	2	3
80	10	30	1	20	2	3
100	10	30	1	20	2	3
125	10	30	1	20	2	3
150	10	30	1	20	2	3
200	18	38	1	20	2	3
250	18	38	1	20	2	3
300	18	38	1	20	2	3

Reference values for tightening torque of screws

Metric flange adapter

d (mm)	DN (mm)	Inch (inch)	Total number of screws	Max. screw tightening torque	
				(Nm)	(lb-ft)
40	32	1¼	4 x M16 x 85	15	11
50	40	1½	4 x M16 x 85	15	11
63	50	2	4 x M16 x 95	20	15
75	65	2½	4 x M16 x 100	25	18
90	80	3	8 x M16 x 110	25	18
110	100	4	8 x M16 x 130	30	22
140	125	5	8 x M16 x 130	35	26
160	150	6	8 x M20 x 180	40	30
225	200	8	8 x M20 x 180	50	37
280	250	10	12 x M20 x 180	55	41
315	300	12	12 x M20 x 180	60	44

ANSI/BS flange adapters

d (mm)	DN (mm)	Inch (inch)	Total number of screws	Max. closing torque	
				(Nm)	(lb-ft)
50	40	2	4 x UNC5/8" x 3½"	20	15
63	50	2½	4 x UNC5/8" x 4"	25	18
75	65	3	4 x UNC5/8" x 4"	25	18
90	80	4	8 x UNC5/8" x 4½"	30	22
110	100	4	8 x UNC5/8" x 4½"	30	22
160	150	6	8 x UNC3/4" x 5"	40	30
225	200	8	8 x UNC3/4" x 6"	50	37
280	250	10	12 x UNC7/8" x 6½"	55	41
315	300	12	12 x UNC7/8" x 7"	60	44
50	40	2	4 x UNC5/8" x 3½"	20	15
63	50	2½	4 x UNC5/8" x 4"	25	18

Dimensions

Check Valve Type 369, PVC-U

d (mm)	DN (mm)	inch (inch)	D (mm)	D1 (mm)	D2 (mm)	D3 (mm)	L (mm)	L1 (mm)	H (mm)
40	32	1 ¼	85	59	18	85	15	22	25
50	40	1 ½	105	74	22	95	16	27	27
63	50	2	124	90	32	109	18	40	29
75	65	2 ½	137	110	40	129	20	55	31
90	80	3	175	125	54	144	20	67	32
110	100	4	175	150	70	164	23	67	31
140	125	4	195	178	92	195	23	94	35
160	150	5	222	192	105	220	26	100	41
225	200	6	279	256	154	275	35	152	38
280	250	8	340	306	192	330	40	180	41
315	300	10	410	342	227	380	45	215	41

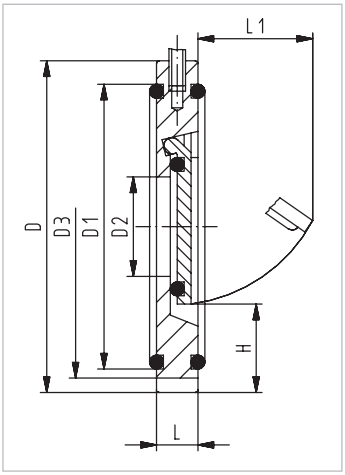

Check Valve Type 369, PP-H

d (mm)	DN (mm)	Inch (inch)	D (mm)	D1 (mm)	D2 (mm)	D3 (mm)	H (mm)	L (mm)	L1 (mm)
40	32	1 ¼	85	59	18	85	25	15	22
50	40	1 ½	105	72	22	95	28	16	27
63	50	2	124	86	32	109	29	18	40
75	65	2 ½	137	105	40	129	31	20	55
90	80	3	175	119	54	144	32	20	67
110	100	4	175	146	70	164	31	23	67
140	125	4	195	173	92	195	35	23	94
160	150	5	222	197	105	220	42	26	100
225	200	6	279	255	154	275	38	35	152
280	250	8	340	312	192	330	41	40	180
315	300	10	410	363	227	380	41	45	215

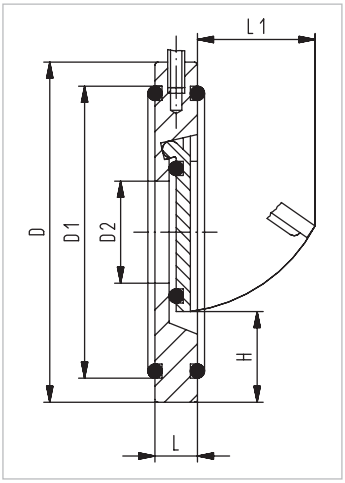

Check Valve Type 369, PVDF

d (mm)	DN (mm)	Inch (inch)	D (mm)	D1 (mm)	D2 (mm)	D3 (mm)	H (mm)	L (mm)	L1 (mm)
40	32	1 ¼	85	59	18	85	15	22	25
50	40	1 ½	105	74	22	95	16	27	27
63	50	2	124	90	32	109	18	40	29
75	65	2 ½	137	110	40	129	20	55	31
90	80	3	175	125	54	144	20	67	32
110	100	4	175	150	70	164	23	67	31
140	125	4	195	178	92	195	23	94	35
160	150	5	222	192	105	220	26	100	41
225	200	6	279	256	154	275	35	152	38
280	250	8	340	306	192	330	40	180	41
310	300	10	410	342	227	380	45	215	41

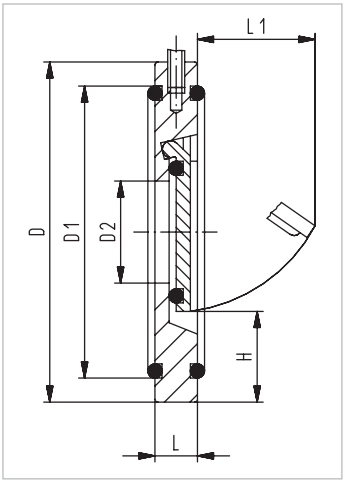

Accessories

- Spring made of stainless steel V4A (1.4408) or Hastelloy C
- Appropriate outlet flange adapter from GF Piping Systems

For further information on accessories, refer to the online product catalogue at www.gfps.com.

The information and technical data (altogether “Data”) herein are not binding, unless explicitly confirmed in writing. The Data neither constitutes any expressed, implied or warranted characteristics, nor guaranteed properties or a guaranteed durability. All Data is subject to modification. The General Terms and Conditions of Sale of Georg Fischer Piping Systems apply.

09/2020-A
© Georg Fischer Piping Systems Ltd, 8201 Schaffhausen/Switzerland
Tel. +41 52 631 11 11 • www.gfps.com • E-Mail: info.ps@georgfischer.com