CALL TOLL FREE 877-742-2878 FOR SALES AND SUPPORT
RETURN TO BurtProcess.com

Signet 2581 FlowtraMag® Meter


(Smartphone not included)

The GF Signet 2581 FlowtraMag is a full-bore plastic PVC in line style magnetic flowmeter. The PVC body with Titanium or *Hastelloy*® C electrodes has no moving parts, and is two to three times lighter in weight compared to traditional metal magmeters on the market. It is designed for high accuracy flow measurement in short pipe runs, making it an ideal solution for industrial applications where performance and ease of use are important.

The FlowtraMag design is factory calibrated with certificate at ±1% of reading accuracy. It is offered in corrosion resistant materials to provide long-term reliability with minimal maintenance costs. The LED indicators show at-a-glance system status, including normal operation, zero flow and partially filled pipe detection.

The flow meter provides three different outputs; field selectable frequency or digital (S^3L) as well as analog 4 to 20 mA in both passive and active configuration. The GF Config Tool Bluetooth® app supports iOS and Android for simple on-the-fly user configuration with in with instantaneous flow reading.

These versatile, easy-to-install meters deliver accurate flow measurement in pipe sizes of DN25 (1 in.), DN40 (1.5 in.), DN50 (2 in.), DN80 (3 in.) and DN100 (4 in.), optimized for performance in short pipe runs often associated with final effluent lines, well heads and water treatment skids.

Download on the App Store

ANDROID APP ON Google play

Features

- **No moving parts**
- **Lighter in weight compared to traditional metal magmeters**
- **Reduced straight run requirements, ideal for final effluent lines, wellheads and skids**
- **Factory calibrated with certificate (±1% of reading accuracy)**
- **Partially filled pipe detection status indicator**
- **Reverse flow direction configurable with 0252 Configuration Tool or GF Config Tool Bluetooth® App**
- **One device with three different outputs: field selectable Frequency or Digital (S^3L), and analog 4 to 20 mA in both passive and active configuration**
- **On-the-fly configuration with GF Config Tool Bluetooth® App**
- **Bluetooth® 4.2 capable, support iOS and Android for simple user configuration with instantaneous flow reading**

Certified to NSF/ANSI 61 & 372

(Titanium only)

Applications

- **Chemical Processing/Production**
- **Cooling Tower**
- **Filtration Systems**
- **Water and Wastewater Treatment**
- **Municipal and Industrial Water Distribution**
- **Pool and Aquatics**
- **Process Control, Water Process Flow**
- **Reverse Osmosis**
- **Scrubber Systems**
- **Metal Recovery and Landfill Leachate**
- **Mining**

Patent #: US 10,712,184 B1
Other U.S. and International Patents Pending

Hastelloy® is a registered trademark of Haynes International.

Specifications

General			
Pipe Size Range		DN25, DN40, DN50, DN80, DN100	1 in., 1.5 in., 2 in., 3 in., 4 in.
Flow Range Titanium or *Hastelloy C*		0.02 to 10 m/s	0.07 to 33 ft/s
DN25 (1")		0.53 LPM to 266.35 LPM	0.14 to 70.36 GPM
DN40 (1.5")		1.36 LPM to 662.34 LPM	0.36 to 174.97 GPM
DN50 (2")		2.23 LPM to 1112.60 LPM	0.59 to 293.92 GPM
DN80 (3 in.)		5.11 LPM to 2493.75 LPM	1.35 to 658.78 GPM
DN100 (4")		8.72 LPM to 4357.83 LPM	2.30 to 1151.22 GPM
Minimum Conductivity		20 µS/cm – water based	
Power Cable Wire		7.6 m (25 ft) 2-conductor shielded	
Output Cable Wire		7.6 m (25 ft) 5-conductor shielded	
Cable wires may be extended up to 300 m (1000 ft), special order only			
Wetted Materials			
Flow Tube Body		PVC	
Electrode		Titanium, grade 2 or *Hastelloy C-276*	
O-rings		FKM, EPDM	
Performance			
Accuracy		± 1% of reading plus ± 0.01 m/s (0.033 ft/s), reference condition 50 µS/cm and water based	
Repeatability		± 0.5% of reading @ 25 °C (77 °F)	
Low Flow Cutoff		0.02 m/s (0.07 ft/s) (adjustable via 0252 Configuration Tool or GF Config Tool App)	
Electrical			
DC Power (Functional Rating)		24 VDC, max 24 W (12 to 32 VDC)	
Reverse Polarity Protected		Up to 35 VDC	
Over-Voltage Maximum Rating		35 VDC	
Current Output			
Passive (low power)		4 to 20 mA per ANSI-ISA 50.00.01 Class H	
Active Output		4 to 20 mA	
Passive Loop Voltage		12 to 32 VDC	
Loop Accuracy		±32 µA (@ 25 °C @ 24 VDC)	
Loop Resolution		5 µA	
Loop Span		3.8 mA to 21 mA	
Error Condition		None, 3.6 mA or 22 mA	
Max. Cable		300 m (1000 ft)	
Max. Loop Resistance		600 Ω @ 24 VDC	
		Compatible with PLC, PC or similar equipment	
Frequency Output			
Frequency		5 to 24 VDC, 50 mA max.	
Frequency Range		0 to 1500 Hz	
Max. Cable		300 m (1000 ft)	
Max. Pull-up Voltage		30 VDC, 10k pull-up recommended	
		Compatible with Signet 8900, 9900, 9950, and 0486 Profibus Concentrator	
Digital (S^3L) Output			
Digital (S^3L)		4.5 to 5.5 VDC	
		Serial ASCII, TTL level 9600 bps Compatible with Signet 8900, 9900, 9950 and 0486 Profibus Concentrator	
Max. Cable Length		Application dependent	
Environmental Requirements			
Enclosure		NEMA 4X / IP65	
Relative Humidity		0 to 95% non-condensing	
Storage Temperature		-10 °C to 60 °C (14 °F to 140 °F)	
Operating Temperature			
	Ambient	-10 °C to 60 °C	14 °F to 140 °F
	Media	0 °C to 60 °C	32 °F to 140 °F
UL Environmental Rating		UL 50, Type 6P Storage	
Altitude		4,000 m	13,123 ft

Pressure/Temperature Ratings		
Maximum Operating Pressure	10 bar @ 23 °C (145 psi @ 73 °F)	
DN25 (1"), DN40 (1.5"), DN50 (2")	3.5 bar @ 60 °C (51 psi @ 140 °F)	
DN80 (3"), DN100 (4")	2.27 bar @ 60 °C (33 psi @ 140 °F)	
Shipping Weight -Titanium or *Hastelloy C*		
DN25 (1")	3.4 kg	7.5 lbs
DN40 (1.5")	4.1 kg	9.1 lbs
DN50 (2")	4.5 kg	9.9 lbs
DN80 (3")	8.3 kg	18.3 lbs
DN100 (4")	8.3 kg	18.3 lbs
Standards and Approvals		
	CE, FCC, NSF (Titanium only, does not include flange gaskets)	
	UL, CUL Recognized Component	
	RoHS compliant, China RoHS	
	Manufactured under ISO 9001, ISO 14001 and ISO 45001	

Temperature/Pressure Graph

Note:
The pressure/temperature graphs are specifically for the Signet sensor. During system design the specifications of all components must be considered. In the case of a metal piping system, a plastic sensor will reduce the system specification.

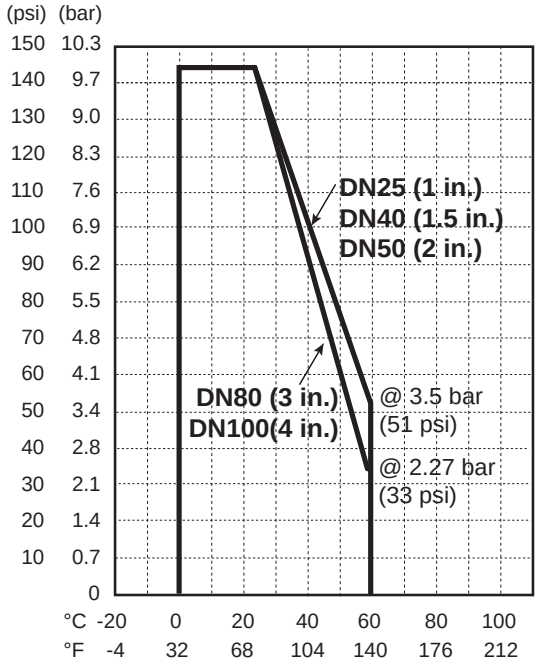

System Overview

Stand-Alone	Panel Mount	Pipe, Tank, Wall	4 to 20 mA Output	Automation System
Signet 2581 FlowtraMag	Signet Instruments - 8900 - 9900-1P - 9900-1BC - 9950	Signet Instruments - 9900-1 with 3-8050-1 Universal Mount Kit - 9900-1BC with Rear Enclosure	- Customer Supplied Chart Recorder, Programmable Logic Controller or - Programmable Automation Controller	- 0486 Profibus Concentrator and Customer Supplied Programmable Logic Controller or - Programmable Automation Controller
	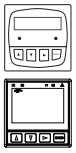	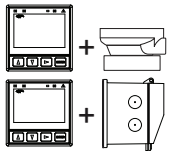		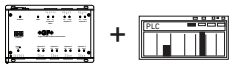
Signet 2581 FlowtraMag - 3-2581PTXX-10X - 3-2581PHXX-10X				

Dimensions

1 in.
ASTM Union ends and union nuts shown

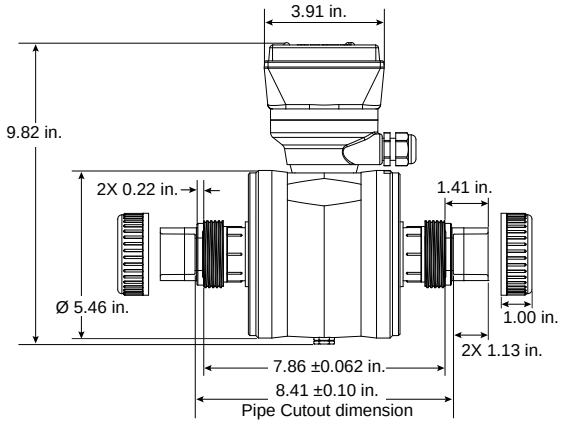

DN25
Metric Union ends and union nuts shown

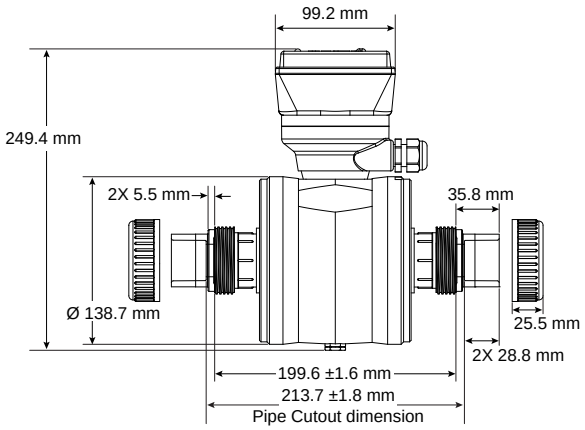

1.5 in.
ASTM Union ends and union nuts shown

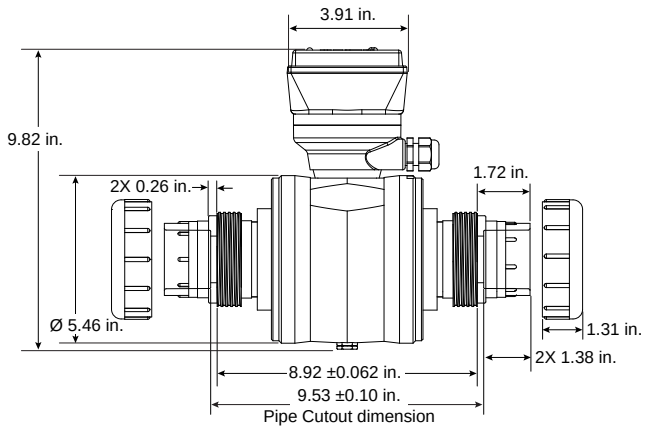

DN40
Metric Union ends and union nuts shown

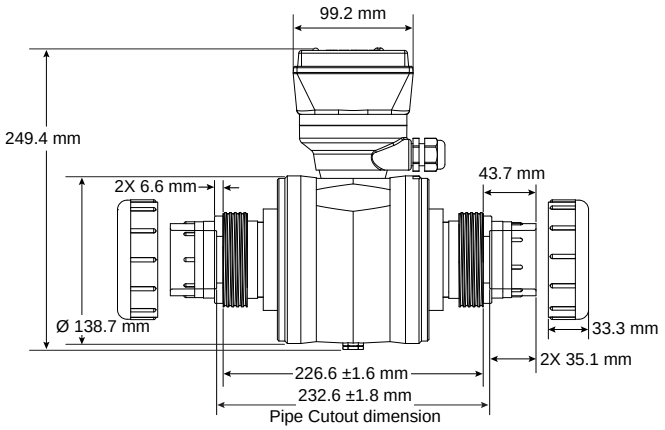

2 in.
ASTM Union ends and union nuts shown

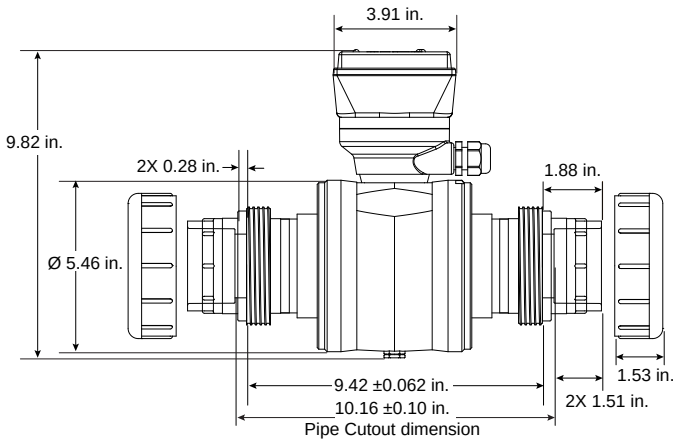

DN50
Metric Union ends and union nuts shown

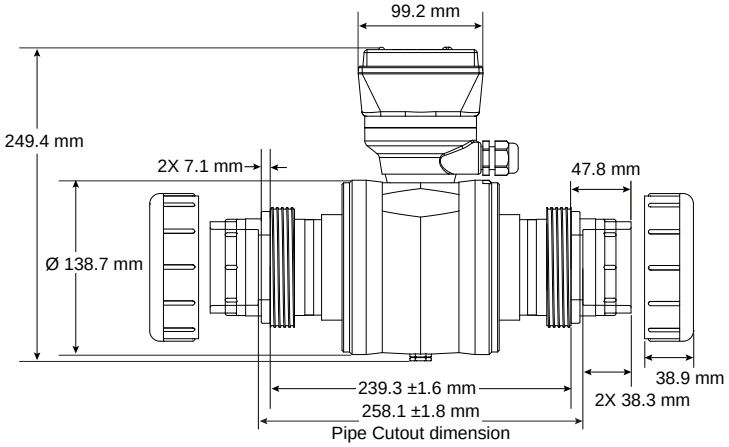

Dimensions

3 in.
Flange bolt kits and gaskets not shown (Sold separately)

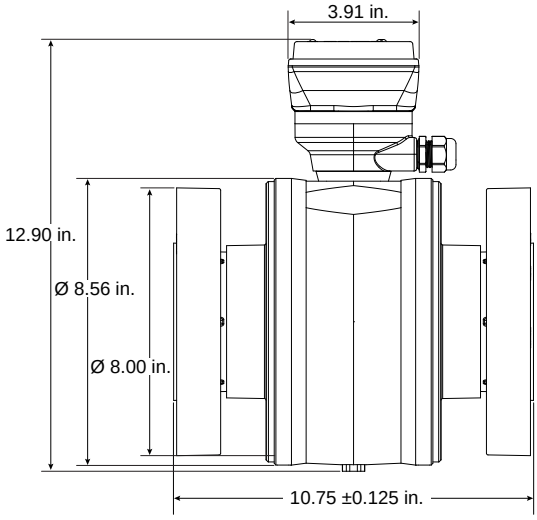

DN80
Flange bolt kits and gaskets not shown (Sold separately)

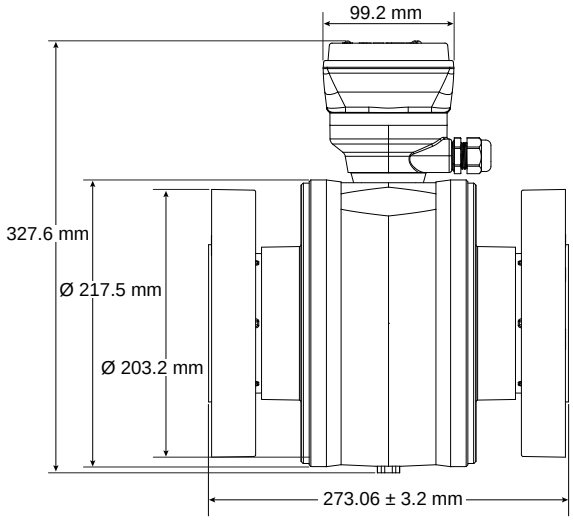

4 in.
Flange bolt kits and gaskets not shown (Sold separately)

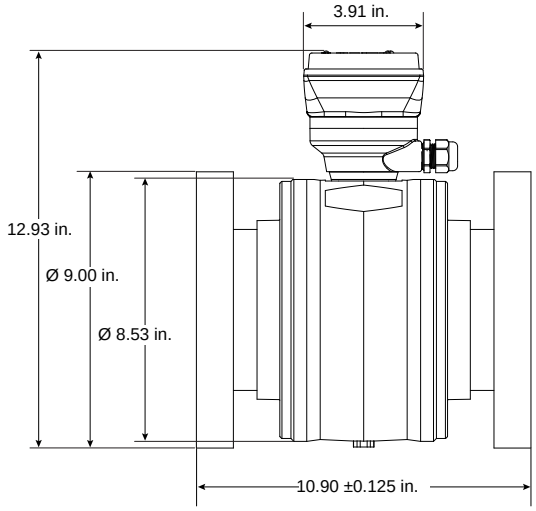

DN100
Flange bolt kits and gaskets not shown (Sold separately)

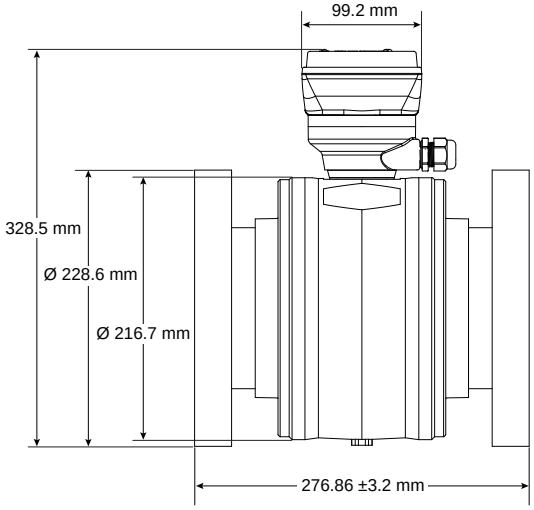

GF Configuration Tool Bluetooth® App



(example shows Menu)

On-the-fly configuration, sensor Information at your fingertips

- **Bluetooth® 4.2 capable, support iOS and Android for simple user configuration**
- **Application setup**
  Set Averaging, Sensitivity, Low Flow Cut Off, Position of Flow, Flow Units and Totalizer Unit
- **Name files**
- **Share and/or Save files**
- **Monitor flow and totalizer**
- **Loop adjustment is a live update**
  Set 4 mA, 20 mA, Error condition of the current output alarm (3.6 or 22 mA), adjust your 4 to 20 mA setting and select output mode
- **Calibration**
  Custom Calibration of Rate, Volumetric, Zero Flow Calibration

Live Logging while connected
to mobile / tablet device, set 1 sec or more increments

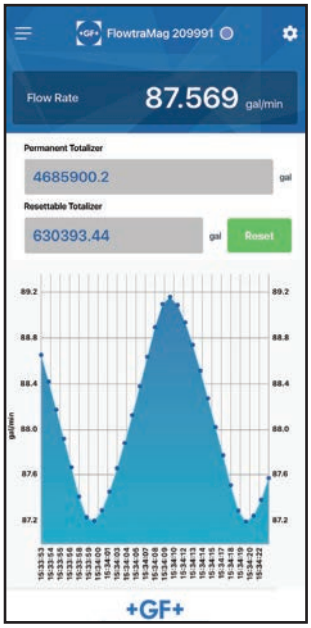

Sensor Information when you need it
Sensor information, Bluetooth Device Tag, Permanent Totalizer, Resettable Totalizer, Calibration Adjustment Factor, Zero Offset Adjustment

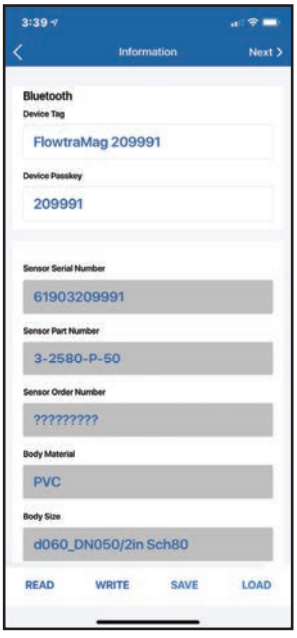

Download on the App Store

ANDROID APP ON Google play

Ordering Information

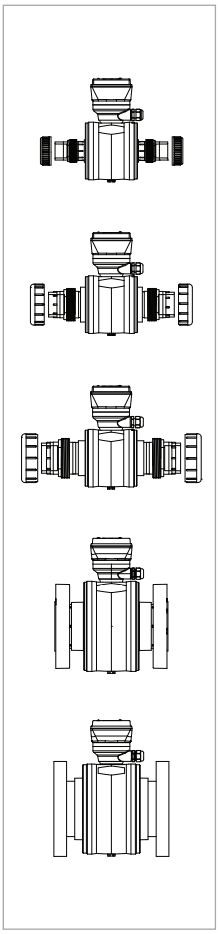

Mfr. Part No.	Code	Description
3-2581-PT01-101	**159 001 970**	FlowtraMag, PVC, Titanium, FKM O-Ring, Union, DN25 (1 in.)
3-2581-PT15-101	**159 001 971**	FlowtraMag, PVC, Titanium, FKM O-Ring, Union, DN40 (1.5 in.)
3-2581-PT02-101	**159 001 972**	FlowtraMag, PVC, Titanium, FKM O-Ring, Union, DN50 (2 in.)
3-2581-PT03-101	**159 001 973**	FlowtraMag, PVC, Titanium, FKM O-Ring, Flange, DN80 (3 in.)
3-2581-PT04-101	**159 001 974**	FlowtraMag, PVC, Titanium, FKM O-Ring, Flange, DN100 (4 in.)
3-2581-PH01-101	**159 001 975**	FlowtraMag, PVC, *Hastelloy C,* FKM O-Ring, Union, DN25 (1 in.)
3-2581-PH15-101	**159 001 976**	FlowtraMag, PVC, *Hastelloy C,* FKM O-Ring, Union, DN40 (1.5 in.)
3-2581-PH02-101	**159 001 977**	FlowtraMag, PVC, *Hastelloy C,* FKM O-Ring, Union, DN50 (2 in.)
3-2581-PH03-101	**159 001 978**	FlowtraMag, PVC, *Hastelloy C,* FKM O-Ring, Flange, DN80 (3 in.)
3-2581-PH04-101	**159 001 979**	FlowtraMag, PVC, *Hastelloy C,* FKM O-Ring, Flange, DN100 (4 in.)
3-2581-PT01-102	**159 001 980**	FlowtraMag, PVC, Titanium, EPDM O-Ring, Union, DN25 (1 in.)
3-2581-PT15-102	**159 001 981**	FlowtraMag, PVC, Titanium, EPDM O-Ring, Union, DN40 (1.5 in.)
3-2581-PT02-102	**159 001 982**	FlowtraMag, PVC, Titanium, EPDM O-Ring, Union, DN50 (2 in.)
3-2581-PT03-102	**159 001 983**	FlowtraMag, PVC, Titanium, EPDM O-Ring, Flange, DN80 (3 in.)
3-2581-PT04-102	**159 001 984**	FlowtraMag, PVC, Titanium, EPDM O-Ring, Flange, DN100 (4 in.)
3-2581-PH01-102	**159 001 985**	FlowtraMag, PVC, *Hastelloy C,* EPDM O-Ring, Union, DN25 (1 in.)
3-2581-PH15-102	**159 001 986**	FlowtraMag, PVC, *Hastelloy C,* EPDM O-Ring, Union, DN40 (1.5 in.)
3-2581-PH02-102	**159 001 987**	FlowtraMag, PVC, *Hastelloy C,* EPDM O-Ring, Union, DN50 (2 in.)
3-2581-PH03-102	**159 001 988**	FlowtraMag, PVC, *Hastelloy C,* EPDM O-Ring, Flange, DN80 (3 in.)
3-2581-PH04-102	**159 001 989**	FlowtraMag, PVC, *Hastelloy C,* EPDM O-Ring, Flange, DN100 (4 in.)

Accessories and Replacement Parts

Mfr. Part No.	Code	Description
3-0252	**159 001 808**	0252 Configuration Tool
3-2581-PX01-10X Accessories		
857 375 010	**857 375 010**	PVC 80 Type 375 Union FKM (SxS) 1 in. (ASTM)
749 418 026	**749 418 026**	1.234IDX.139 FKM O-RING RMS1071 (1 in.)
897 375 010	**897 375 010**	PVC 80 Type 375 Union EPDM (SxS) 1 in. (ASTM)
748 419 026	**748 419 026**	NSF 1.234IDX.139 EPDM O-RING (1 in.)
161 375 904C	**161 375 904C**	Union End, PVC, PN16, d32DN25 (Metric)
3-2581-PX15-10X Accessories		
857 375 015	**857 375 015**	PVC 80 Type 375 Union FKM (SxS) 1.5 in. (ASTM)
748 419 003	**748 419 003**	1.725IDX.210 FKM O-RING RMS1071 (1.5 in.)
897 375 015	**897 375 015**	PVC 80 Type 375 Union EPDM (SxS) 1.5 in. (ASTM)
749 418 003	**749 418 003**	NSF 1.725IDX.210 EPDM O-RING (1.5 in.)
161 375 906C	**161 375 906C**	Union End, PVC, PN16, d50DN40 (Metric)
3-2581-PX02-10X Accessories		
857 375 020	**857 375 020**	PVC 80 Type 375 Union FKM (SxS) 2 in. (ASTM)
749 418 231	**749 418 231**	2.225X.210 FKM O-RING RMS1071 (2 in.)
897 375 020	**897 375 020**	PVC 80 Type 375 Union EPDM (SxS) 2 in. (ASTM)
748 419 231	**748 419 231**	NSF 2.225X.210 EPDM O-RING (2 in.)
161 375 907C	**161 375 907C**	Union End, PVC, PN16, d63DN50 (Metric)
3-2581-PX03-10X Accessories		
854-030	**854-030**	3 in. PVC80 Van-Stone Flange (S)
37X 002 117	**37X 002 117**	FKM Full Face Flange Gasket - 150# ANSI Bolt Pattern - 3 in.
37X 002 008	**37X 002 008**	EPDM Full Face Flange Gasket - 150# ANSI Bolt Pattern - 3 in.
37Z 000 068	**37Z 000 068**	Van Stone Flange 316SS Bolt Kit, 4-hole, 3 in. ASTM
721 790 113	**721 790 113**	DN80 Flange Adapter, PVC-U, Metric (Use with backing flange 721 700 013)
721 700 013	**721 700 013**	DN80 Backing Flange, PVC-U, Metric
749 440 713	**749 440 713**	DN80 FKM Profile Flange Gasket, Metric
748 440 713	**748 440 713**	DN80 EPDM Profile Flange Gasket, Metric
3-2581-PX04-10X Accessories		
854-040	**854-040**	4 in. PVC80 Van-Stone Flange (S)
37X 002 118	**37X 002 118**	FKM Full Face Flange Gasket - 150# ANSI Bolt Pattern - 4 in.
37X 002 009	**37X 002 009**	EPDM Full Face Flange Gasket - 150# ANSI Bolt Pattern - 4 in.
37Z 000 069	**37Z 000 069**	Van Stone Flange 316SS Bolt Kit, 8-hole, 4 in. ASTM
721 790 114	**721 790 114**	DN100 Flange Adapter, PVC-U, Metric (Use with backing flange 721 700 014)
721 700 014	**721 700 014**	DN100 V-Flange Ring PVC-U, Metric
749 440 714	**749 440 714**	DN100 FKM Profile Flange Gasket, Metric
748 440 714	**748 440 714**	DN100 EPDM Profile Flange Gasket, Metric

3-2581.099 Rev B (03/21)
© Georg Fischer Signet LLC
3401 Aero Jet Avenue, El Monte, CA 91731-2882 U.S.A. • Tel. (626) 571-2770 • Fax (626) 573-2057 • www.gfps.com • e-mail: signet.ps@georgfischer.com
Specifications subject to change without notice. All rights reserved. All corporate names and trademarks stated herein are the property of their respective companies.