SERVICE & OPERATING MANUAL

Original Instructions

Certified Quality

ISO 9001 Certified
ISO 14001 Certified

Model HD20F

Non-Metallic Flap Valve

Design Level 1

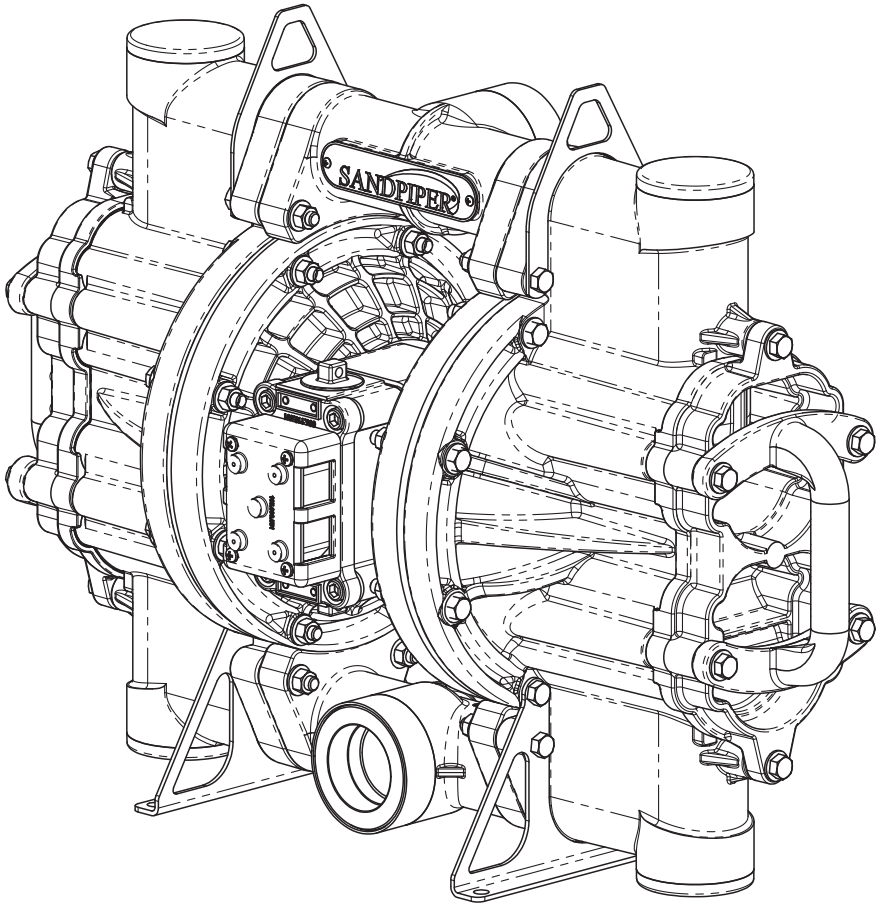

Warren Rupp, Inc.®
A Unit of IDEX Corporation
800 N. Main St.,
Mansfield, Ohio 44902 USA
Telephone 419.524.8388
Fax 419.522.7867
SANDPIPERPUMP.COM

© Copyright 2022 Warren Rupp, Inc.®
All rights reserved

SANDPIPER®
A WARREN RUPP, INC. BRAND
SANDPIPERPUMP.COM

Safety Information

⚠ IMPORTANT



Read the safety warnings and instructions in this manual before pump installation and start-up. Failure to comply with the recommendations stated in this manual could damage the pump and void factory warranty.



When the pump is used for materials that tend to settle out or solidify, the pump should be flushed after each use to prevent damage. In freezing temperatures the pump should be completely drained between uses.

⚠ CAUTION



Before pump operation, inspect all fasteners for loosening caused by gasket creep. Retighten loose fasteners to prevent leakage. Follow recommended torques stated in this manual.



Nonmetallic pumps and plastic components are not UV stabilized. Ultraviolet radiation can damage these parts and negatively affect material properties. Do not expose to UV light for extended periods of time.



WARNING
Pump not designed, tested or certified to be powered by compressed natural gas. Powering the pump with natural gas will void the warranty.



WARNING
The use of non-OEM replacement parts will void (or negate) agency certifications, including CE, ATEX, CSA, 3A and EC1935 compliance (Food Contact Materials). Warren Rupp, Inc. cannot ensure nor warrant non-OEM parts to meet the stringent requirements of the certifying agencies.

⚠ WARNING



When used for toxic or aggressive fluids, the pump should always be flushed clean prior to disassembly.



Before maintenance or repair, shut off the compressed air line, bleed the pressure, and disconnect the air line from the pump. Be certain that approved eye protection and protective clothing are worn at all times. Failure to follow these recommendations may result in serious injury or death.



Airborne particles and loud noise hazards. Wear eye and ear protection.



In the event of diaphragm rupture, pumped material may enter the air end of the pump, and be discharged into the atmosphere. If pumping a product that is hazardous or toxic, the air exhaust must be piped to an appropriate area for safe containment.



Take action to prevent static sparking. Fire or explosion can result, especially when handling flammable liquids. The pump, piping, valves, containers and other miscellaneous equipment must be properly grounded.



This pump is pressurized internally with air pressure during operation. Make certain that all fasteners and piping connections are in good condition and are reinstalled properly during reassembly.



Use safe practices when lifting.

Table of Contents

SECTION 1: PUMP SPECIFICATIONS.....4
- Explanation of Nomenclature
- Performance
- Materials
- Dimensional Drawings

SECTION 2: INSTALLATION & OPERATION ...8
- Principle of Pump Operation
- Recommended Installation Guide
- Troubleshooting Guide

SECTION 3: EXPLODED VIEW.....11
- Composite Repair Parts Drawing
- Composite Repair Parts List
- Material Codes

SECTION 4: AIR END 17
- Air Distribution Valve Assembly
- Air Valve with Stroke Indicator Assembly
- Pilot Valve Assembly
- Intermediate Assembly

SECTION 5: WET END.....21
- Diaphragm Drawings
- Diaphragm Servicing

SECTION 7: WARRANTY & CERTIFICATES ..23
- Warranty
- CE Declaration of Conformity - Machinery

Explanation of Pump Nomenclature

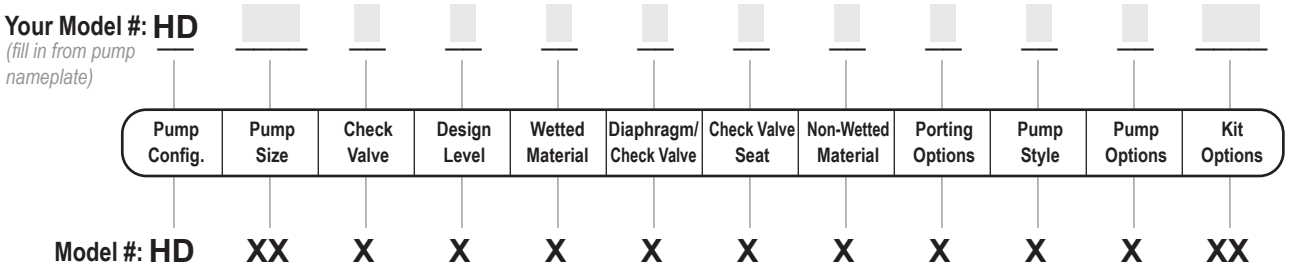

Pump Configuration
HD Heavy Duty

Pump Size
20 2"

Check Valve Type
F Flap Valve

Design Level
1 Design Level

Wetted Material
P Polypropylene / Glass Filled Polypropylene

Diaphragm/Check Valve Materials
B Buna-N / Buna-N
E EPDM / EPDM
H Hytrel / Hytrel
J Santoprene / EPDM
N Neoprene / Neoprene
P Neoprene / Urethane
V FKM / FKM

Check Valve Seat
S Stainless

Non-Wetted Material Options
P Glass Filled Polypropylene

Porting Options
N NPT Female
B BSPT Female
U Universal Flange (Fits ANSI & DIN)

Pump Style
S Standard

Pump Options
0 Integral Muffler

Kit Options
00. None
P0. 10.30VDC Pulse Output Kit
P1. Intrinsically-Safe 5.30VDC, 110/120VAC 220/240 VAC Pulse Output Kit
P2. 110/120 or 220/240VAC Pulse Output Kit
SP. Stroke Indicator Pins
SB. Stainless Brass Main Valve

Your Serial #: *(fill in from pump nameplate)* _____

Performance

HD20F NON-METALLIC FLAP VALVE

SUCTION/DISCHARGE PORT SIZE
- 2" NPT (F)
- 2" BSPT (F)
- 2" ANSI / DIN Flange

CAPACITY
- 0 to 150 gallons per minute (0 to 567 liters per minute)

AIR DISTRIBUTION VALVE
- No-lube, no-stall design

SOLIDS-HANDLING
- Up to 1.8 in. (45.7mm)

HEADS UP TO
- 100 psi or 231 ft. of water (7 bar or 70 meters)

MAXIMUM OPERATING PRESSURE
- 100 psi (7 bar)

DISPLACEMENT/STROKE
- .50 Gallon / 1.9 liter

WEIGHTS
- Pump: 57 lbs. (26kg)
- Shipping: 70 lbs. (31.7kg)

Performance based on the following: elastomer fitted pump, flooded suction, water at ambient conditions.
The use of other materials and varying hydraulic conditions may result in deviations in excess of 5%.

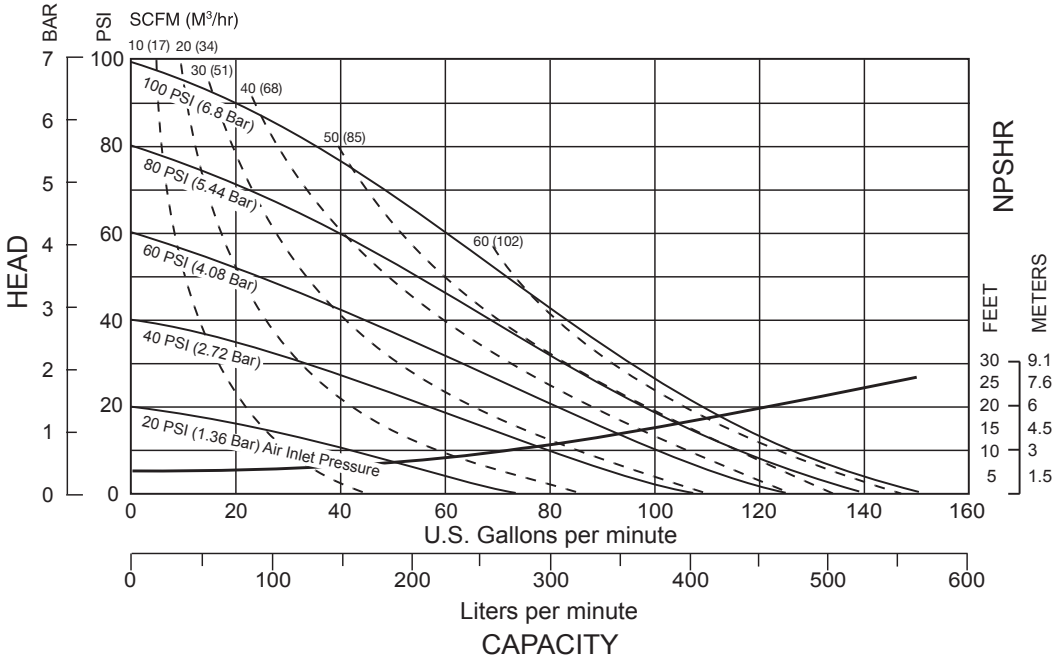

Materials

Material Profile:	Operating Temperatures:	
⚠ *CAUTION! Operating temperature limitations are as follows:*	Max.	Min.
Conductive Acetal: Tough, impact resistant, ductile. Good abrasion resistance and low friction surface. Generally inert, with good chemical resistance except for strong acids and oxidizing agents.	190°F 88°C	-20°F -29°C
EPDM: Shows very good water and chemical resistance. Has poor resistance to oils and solvents, but is fair in ketones and alcohols.	280°F 138°C	-40°F -40°C
FKM: (Fluorocarbon) Shows good resistance to a wide range of oils and solvents; especially all aliphatic, aromatic and halogenated hydrocarbons, acids, animal and vegetable oils. Hot water or hot aqueous solutions (over 70°F(21°C)) will attack FKM.	350°F 177°C	-40°F -40°C
Hytrel®: Good on acids, bases, amines and glycols at room temperatures only.	220°F 104°C	-20°F -29°C
Neoprene: All purpose. Resistance to vegetable oils. Generally not affected by moderate chemicals, fats, greases and many oils and solvents. Generally attacked by strong oxidizing acids, ketones, esters and nitro hydrocarbons and chlorinated aromatic hydrocarbons.	200°F 93°C	-10°F -23°C
Nitrile: General purpose, oil-resistant. Shows good solvent, oil, water and hydraulic fluid resistance. Should not be used with highly polar solvents like acetone and MEK, ozone, chlorinated hydrocarbons and nitro hydrocarbons.	190°F 88°C	-10°F -23°C
Nylon: 6/6 High strength and toughness over a wide temperature range. Moderate to good resistance to fuels, oils and chemicals.	180°F 82°C	32°F 0°C
Polypropylene: A thermoplastic polymer. Moderate tensile and flex strength. Resists stong acids and alkali. Attacked by chlorine, fuming nitric acid and other strong oxidizing agents.	180°F 82°C	32°F 0°C
PVDF: (Polyvinylidene Fluoride) A durable fluoroplastic with excellent chemical resistance. Excellent for UV applications. High tensile strength and impact resistance.	250°F 121°C	0°F -18°C
Santoprene®: Injection molded thermoplastic elastomer with no fabric layer. Long mechanical flex life. Excellent abrasion resistance.	275°F 135°C	-40°F -40°C
UHMW PE: A thermoplastic that is highly resistant to a broad range of chemicals. Exhibits outstanding abrasion and impact resistance, along with environmental stress-cracking resistance.	180°F 82°C	-35°F -37°C
Urethane: Shows good resistance to abrasives. Has poor resistance to most solvents and oils.	150°F 66°C	32°F 0°C
Virgin PTFE: (PFA/TFE) Chemically inert, virtually impervious. Very few chemicals are known to chemically react with PTFE; molten alkali metals, turbulent liquid or gaseous fluorine and a few fluoro-chemicals such as chlorine trifluoride or oxygen difluoride which readily liberate free fluorine at elevated temperatures.	220°F 104°C	-35°F -37°C
Maximum and Minimum Temperatures are the limits for which these materials can be operated. Temperatures coupled with pressure affect the longevity of diaphragm pump components. Maximum life should not be expected at the extreme limits of the temperature ranges.		

Metals:

Alloy C: Equal to ASTM494 CW-12M-1 specification for nickel and nickel alloy.
Stainless Steel: Equal to or exceeding ASTM specification A743 CF-8M for corrosion resistant iron chromium, iron chromium nickel and nickel based alloy castings for general applications. Commonly referred to as 316 Stainless Steel in the pump industry.

For specific applications, always consult the Chemical Resistance Chart.

Dimensional Drawings

HD20F Non-Metallic

Dimensions in Inches [ ] in Millimeters. Dimensional tolerance: +/- 1/8" [ ] +/- 3mm

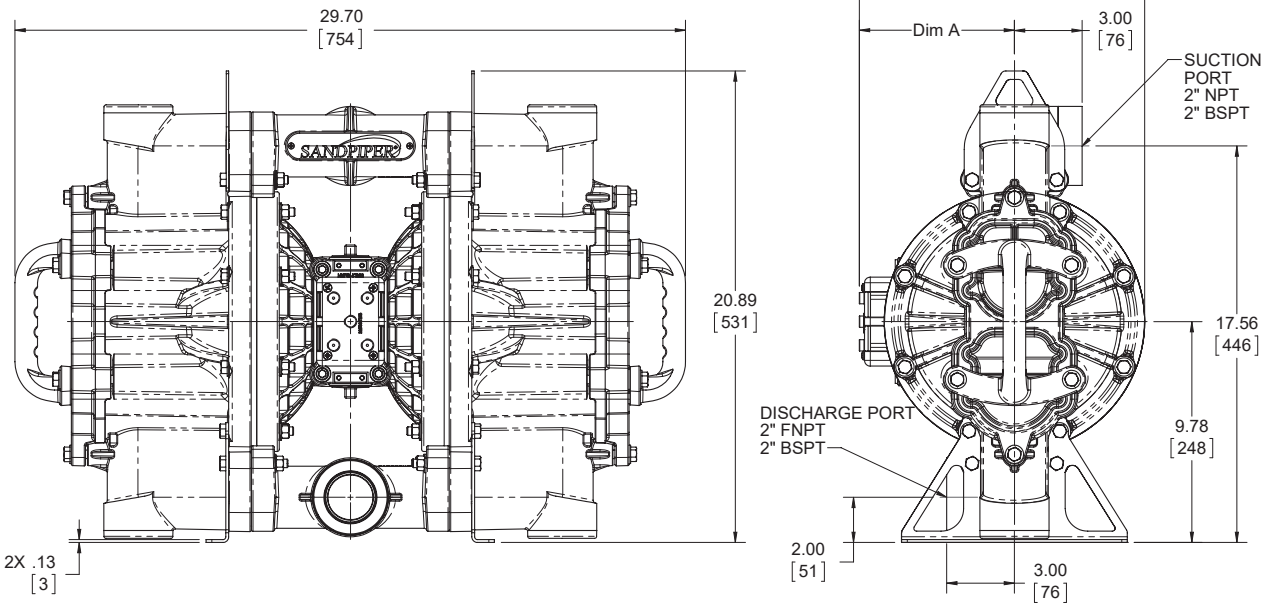

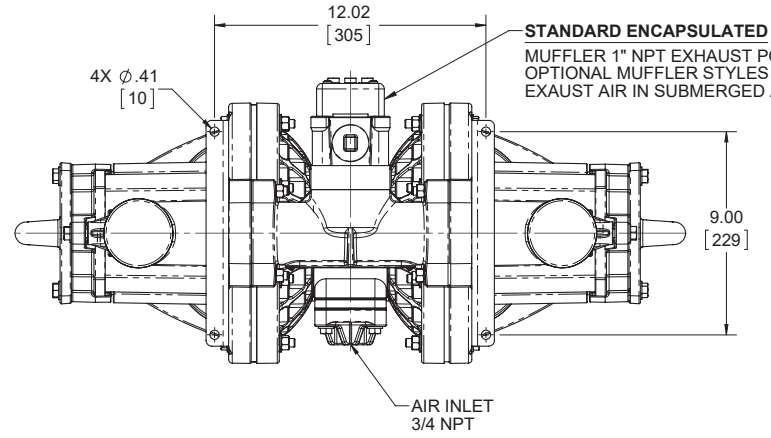

DIMENSIONAL TOLERANCE ±.13 [3]

MUFFLER OPTION	DIM "A"	DIM "B"
INTEGRAL MUFFLER	6.88 [175]	12.65 [321]

SUBMERGED ILLUSTRATION

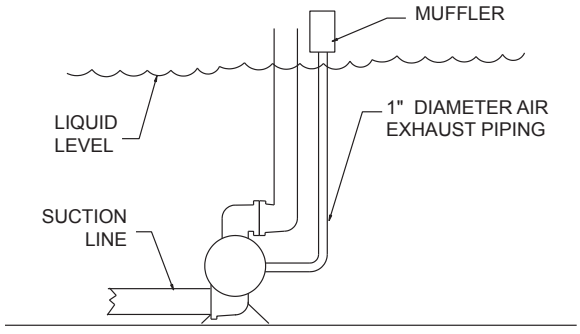

⚠ IMPORTANT



When the pumped product source is at a higher level than the pump (flooded suction condition), pipe the exhaust higher than the product source to prevent siphoning spills. In the event of a diaphragm failure a complete rebuild of the center section is recommended.

Dimensional Drawings

HD20F Non-Metallic Flanged Manifold

Dimensions in Inches [ ] in Millimeters. Dimensional tolerance: +/- 1/8" [ ] +/- 3mm

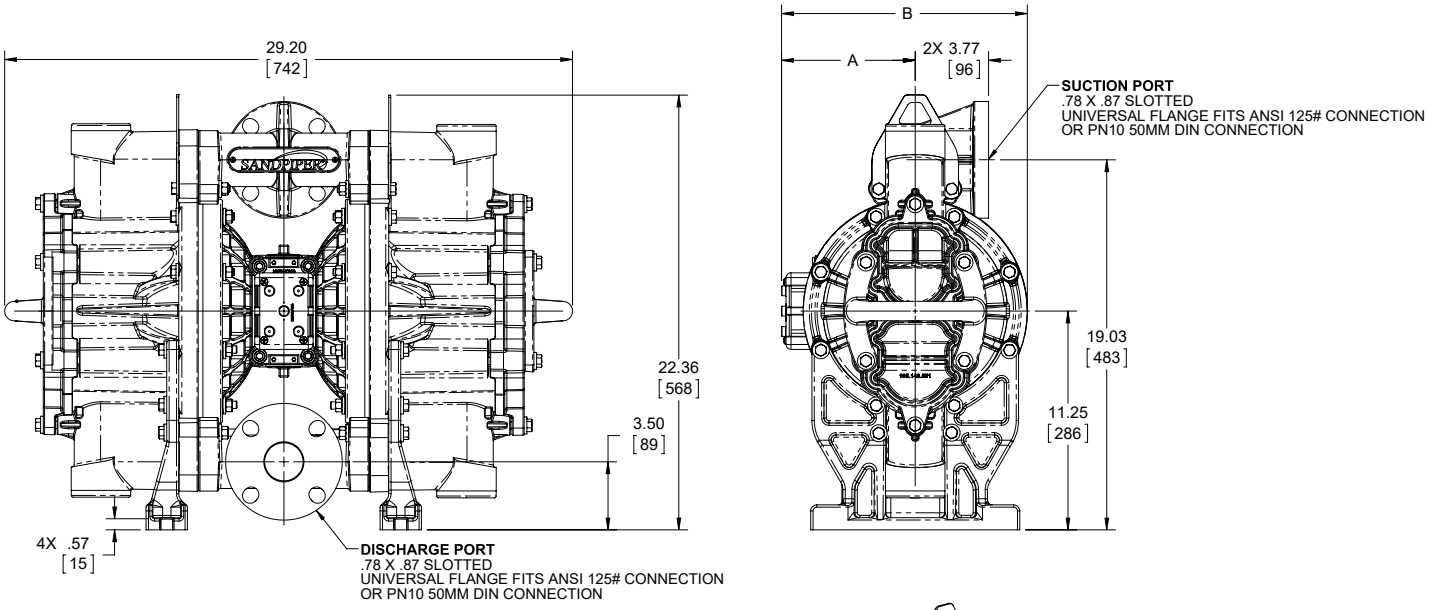

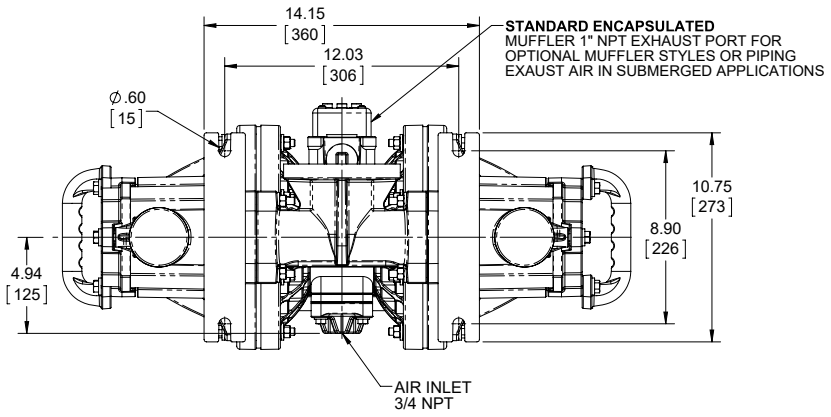

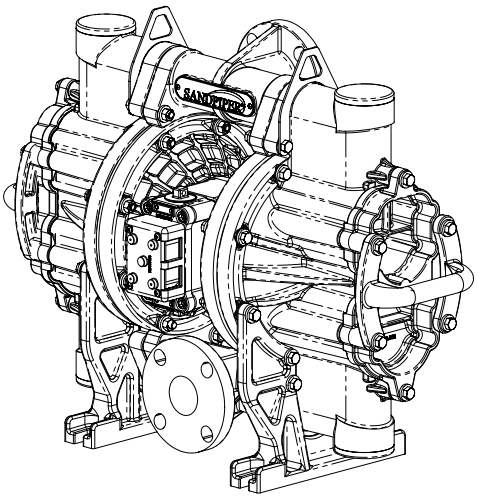

MODEL HD20F

DIMENSIONAL TOLERANCE ±.13 [3]

MUFFLER OPTION	DIM "A"	DIM "B"
INTEGRAL MUFFLER	6.88 [175]	12.65 [321]

SUBMERGED ILLUSTRATION

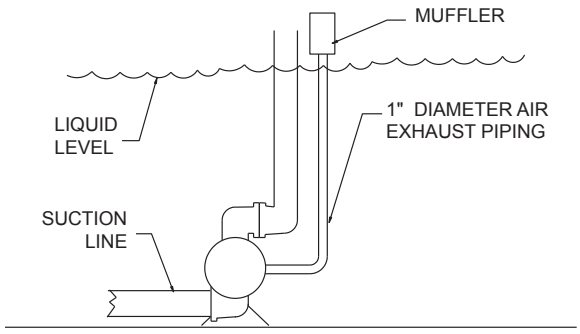

⚠ IMPORTANT

When the pumped product source is at a higher level than the pump (flooded suction condition), pipe the exhaust higher than the product source to prevent siphoning spills. In the event of a diaphragm failure a complete rebuild of the center section is recommended.

Principle of Pump Operation

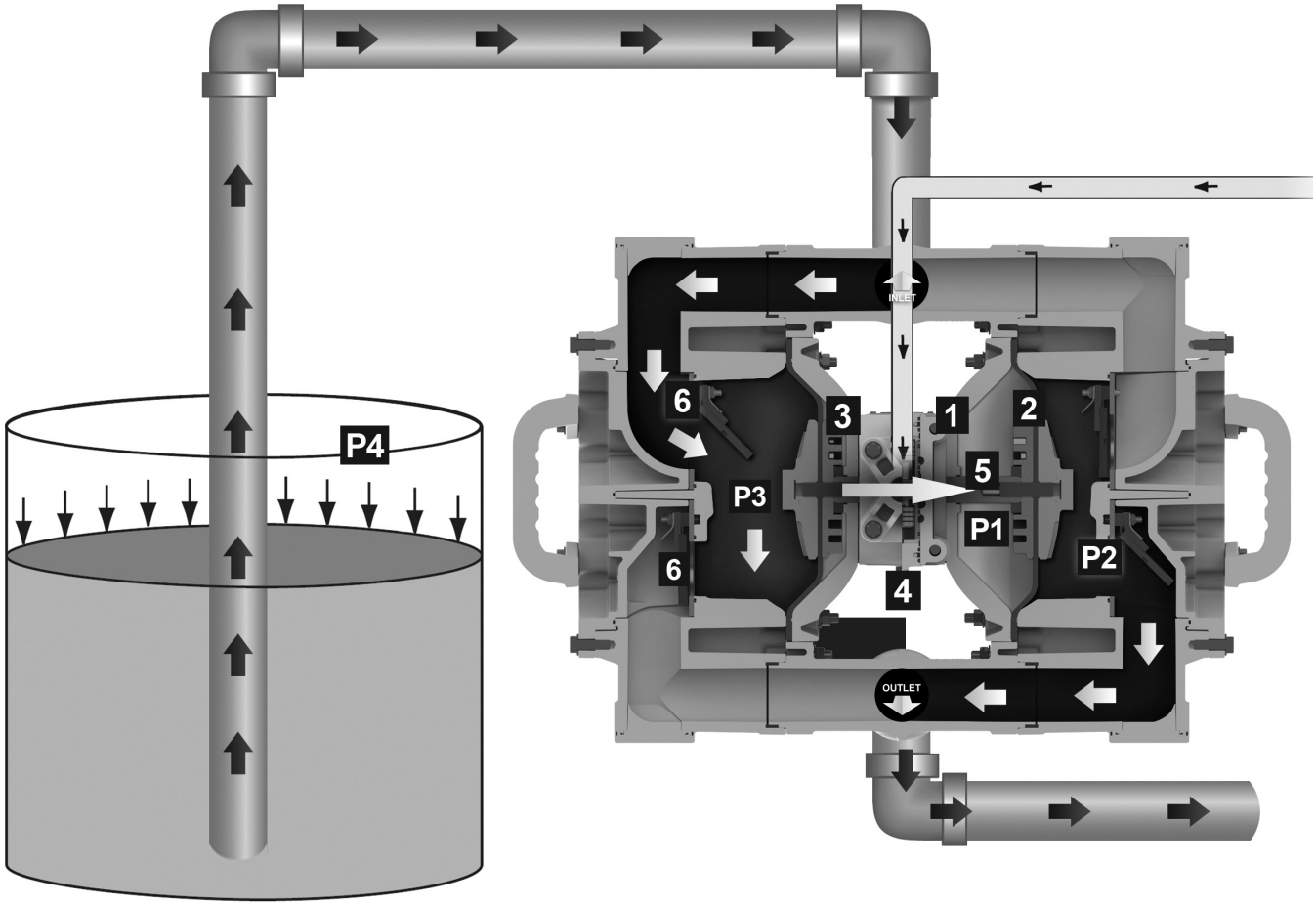

Air-Operated Double Diaphragm (AODD) pumps are powered by compressed air or nitrogen.

The main directional (air) control valve ① distributes compressed air to an air chamber, exerting uniform pressure over the inner surface of the diaphragm ②. At the same time, the exhausting air ③ from behind the opposite diaphragm is directed through the air valve assembly(s) to an exhaust port ④.

As inner chamber pressure **(P1)** exceeds liquid chamber pressure **(P2)**, the rod ⑤ connected diaphragms shift together creating discharge on one side and suction on the opposite side. The discharged and primed liquid's directions are controlled by the check valves (ball or flap)⑥ orientation.

The pump primes as a result of the suction stroke. The suction stroke lowers the chamber pressure **(P3)** increasing the chamber volume. This results in a pressure differential necessary for atmospheric pressure **(P4)** to push the fluid through the suction piping and across the suction side check valve and into the outer fluid chamber ⑦.

Suction (side) stroking also initiates the reciprocating (shifting, stroking or cycling) action of the pump. The suction diaphragm's movement is mechanically pulled through its stroke. The diaphragm's inner plate makes contact with an actuator plunger aligned to shift the pilot signaling valve. Once actuated, the pilot valve sends a pressure signal to the opposite end of the main directional air valve, redirecting the compressed air to the opposite inner chamber.

Recommended Installation Guide

Available Accessories:

1. Surge Suppressor
2. Filter/Regulator
3. Air Dryer
4. Lubricator

Note: Surge Suppressor and Piping, including air line, must be supported after the flexible connections.

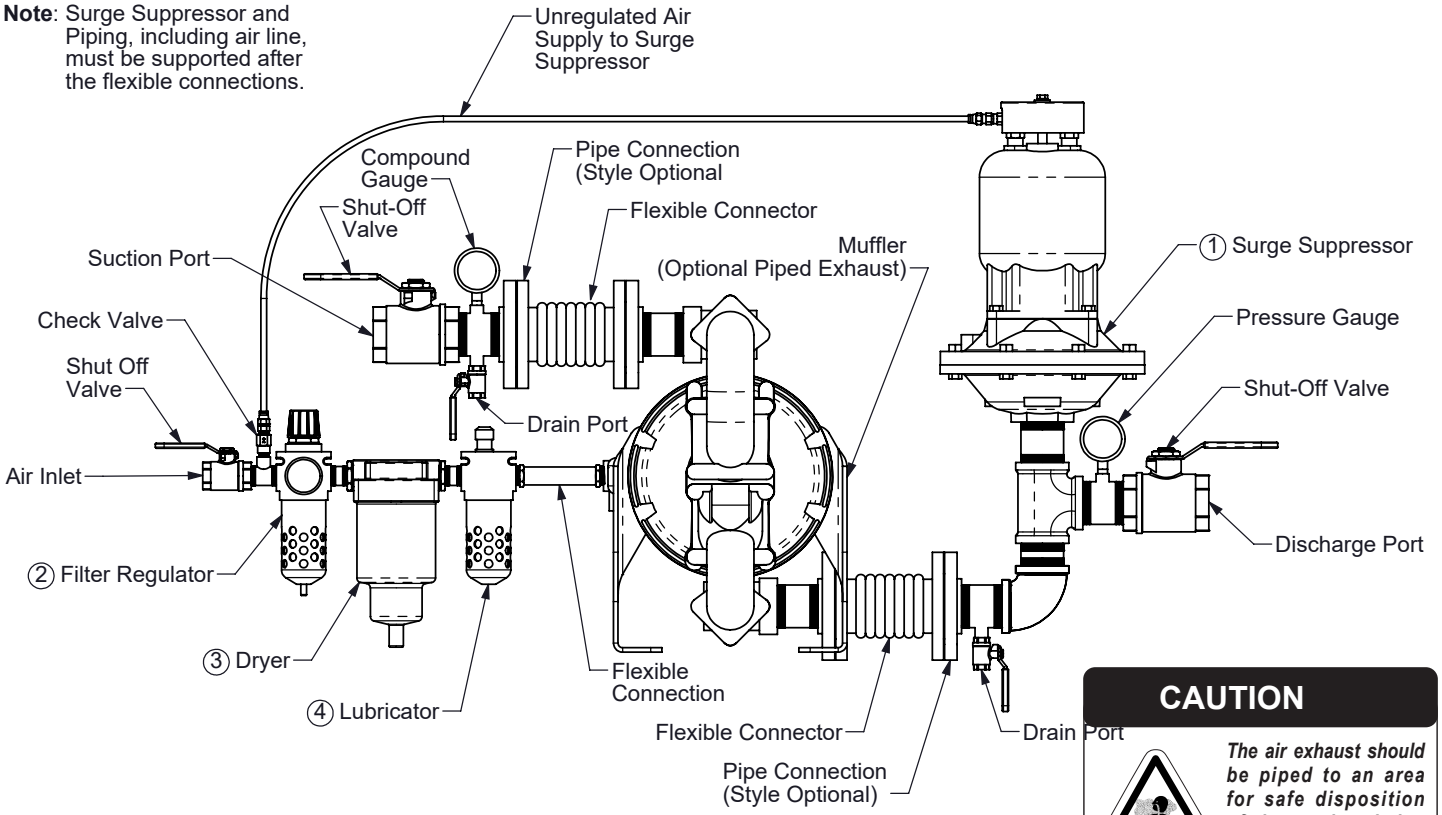

CAUTION

The air exhaust should be piped to an area for safe disposition of the product being pumped, in the event of a diaphragm failure.

Installation And Start-Up

Locate the pump as close to the product being pumped as possible. Keep the suction line length and number of fittings to a minimum. Do not reduce the suction line diameter.

Air Supply

Connect the pump air inlet to an air supply with sufficient capacity and pressure to achieve desired performance. A pressure regulating valve should be installed to insure air supply pressure does not exceed recommended limits.

Air Valve Lubrication

The air distribution system is designed to operate WITHOUT lubrication. This is the standard mode of operation. If lubrication is desired, install an air line lubricator set to deliver one drop of SAE 10 non-detergent oil for every 20 SCFM (9.4 liters/sec.) of air the pump consumes. Consult the Performance Curve to determine air consumption.

Air Line Moisture

Water in the compressed air supply may cause icing or freezing of the exhaust air, causing the pump to cycle erratically or stop operating. Water in the air supply can be reduced by using a point-of-use air dryer.

Air Inlet And Priming

To start the pump, slightly open the air shut-off valve. After the pump primes, the air valve can be opened to increase air flow as desired. If opening the valve increases cycling rate, but does not increase the rate of flow, cavitation has occurred. The valve should be closed slightly to obtain the most efficient air flow to pump flow ratio.

Troubleshooting Guide

Symptom:	Potential Cause(s):	Recommendation(s):
Pump Cycles Once	Deadhead (system pressure meets or exceeds air supply pressure).	Increase the inlet air pressure to the pump. Pump is designed for 1:1 pressure ratio at zero flow. (Does not apply to high pressure 2:1 units).
	Air valve or intermediate gaskets installed incorrectly.	Install gaskets with holes properly aligned.
	Bent or missing actuator plunger.	Remove pilot valve and inspect actuator plungers.
Pump Will Not Operate / Cycle	Pump is over lubricated.	Set lubricator on lowest possible setting or remove. Units are designed for lube free operation.
	Lack of air (line size, PSI, CFM).	Check the air line size and length, compressor capacity (HP vs. CFM required).
	Check air distribution system.	Disassemble and inspect main air distribution valve, pilot valve and pilot valve actuators.
	Discharge line is blocked or clogged manifolds.	Check for inadvertently closed discharge line valves. Clean discharge manifolds/piping.
	Deadhead (system pressure meets or exceeds air supply pressure).	Increase the inlet air pressure to the pump. Pump is designed for 1:1 pressure ratio at zero flow. (Does not apply to high pressure 2:1 units).
	Blocked air exhaust muffler.	Remove muffler element, clean or de-ice, and re-install.
	Pumped fluid in air exhaust muffler.	Disassemble pump chambers. Inspect for diaphragm rupture or loose diaphragm plate assembly.
	Pump chamber is blocked.	Disassemble and inspect wetted chambers. Remove or flush any obstructions.
Pump Cycles and Will Not Prime or No Flow	Cavitation on suction side.	Check suction condition (move pump closer to product).
	Check valve obstructed. Check Valve not seating properly or sticking.	Disassemble the wet end of the pump and manually dislodge obstruction in the check valve pocket. Clean out around valve and valve seat area. Replace valve seat if damaged.
	Valve(s) / seat(s) damaged or attacked by product.	Check Chemical Resistance Guide for compatibility.
	Check valve and/or seat is worn or needs adjusting.	Inspect check valves and seats for wear and proper setting. Replace if necessary.
	Suction line is blocked.	Remove or flush obstruction. Check and clear all suction screens or strainers.
	Excessive suction lift.	For lifts exceeding 20' of liquid, filling the chambers with liquid will prime the pump in most cases.
	Suction side air leakage or air in product.	Visually inspect all suction-side gaskets and pipe connections.
	Pumped fluid in air exhaust muffler.	Disassemble pump chambers. Inspect for diaphragm rupture or loose diaphragm plate assembly.
Pump Cycles Running Sluggish / Stalling, Flow Unsatisfactory	Over lubrication.	Set lubricator on lowest possible setting or remove. Units are designed for lube free operation.
	Icing.	Remove muffler screen, de-ice, and re-install. Install a point of use air drier.
	Clogged manifolds.	Clean manifolds to allow proper air flow.
	Deadhead (system pressure meets or exceeds air supply pressure).	Increase the inlet air pressure to the pump. Pump is designed for 1:1 pressure ratio at zero flow. (Does not apply to high pressure 2:1 units).
	Cavitation on suction side.	Check suction (move pump closer to product).
	Lack of air (line size, PSI, CFM).	Check the air line size, length, compressor capacity.
	Excessive suction lift.	For lifts exceeding 20' of liquid, filling the chambers with liquid will prime the pump in most cases.
	Air supply pressure or volume exceeds system hd.	Decrease inlet air (press. and vol.) to the pump. Pump is cavitating the fluid by fast cycling.
	Undersized suction line.	Meet or exceed pump connections.
	Restrictive or undersized air line.	Install a larger air line and connection.
	Suction side air leakage or air in product.	Visually inspect all suction-side gaskets and pipe connections.
	Suction line is blocked.	Remove or flush obstruction. Check and clear all suction screens or strainers.
	Pumped fluid in air exhaust muffler.	Disassemble pump chambers. Inspect for diaphragm rupture or loose diaphragm plate assembly.
	Check valve obstructed.	Disassemble the wet end of the pump and manually dislodge obstruction in the check valve pocket.
	Check valve and/or seat is worn or needs adjusting.	Inspect check valves and seats for wear and proper setting. Replace if necessary.
	Entrained air or vapor lock in chamber(s).	Purge chambers through tapped chamber vent plugs. Purging the chambers of air can be dangerous.
Product Leaking Through Exhaust	Diaphragm failure, or diaphragm plates loose.	Replace diaphragms, check for damage and ensure diaphragm plates are tight.
	Diaphragm stretched around center hole or bolt holes.	Check for excessive inlet pressure or air pressure. Consult Chemical Resistance Chart for compatibility with products, cleaners, temperature limitations and lubrication.
Premature Diaphragm Failure	Cavitation.	Enlarge pipe diameter on suction side of pump.
	Excessive flooded suction pressure.	Move pump closer to product. Raise pump/place pump on top of tank to reduce inlet pressure. Install Back pressure device (Tech bulletin 41r). Add accumulation tank or pulsation dampener.
	Misapplication (chemical/physical incompatibility).	Consult Chemical Resistance Chart for compatibility with products, cleaners, temperature limitations and lubrication.
	Incorrect diaphragm plates or plates on backwards, installed incorrectly or worn.	Check Operating Manual to check for correct part and installation. Ensure outer plates have not been worn to a sharp edge.
Unbalanced Cycling	Excessive suction lift.	For lifts exceeding 20' of liquid, filling the chambers with liquid will prime the pump in most cases.
	Undersized suction line.	Meet or exceed pump connections.
	Pumped fluid in air exhaust muffler.	Disassemble pump chambers. Inspect for diaphragm rupture or loose diaphragm plate assembly.
	Suction side air leakage or air in product.	Visually inspect all suction-side gaskets and pipe connections.
	Check valve obstructed.	Disassemble the wet end of the pump and manually dislodge obstruction in the check valve pocket.
	Check valve and/or seat is worn or needs adjusting.	Inspect check valves and seats for wear and proper setting. Replace if necessary.
	Entrained air or vapor lock in chamber(s).	Purge chambers through tapped chamber vent plugs.

For additional troubleshooting tips contact After Sales Support at service.warrenrupp@idexcorp.com or 419-524-8388

Composite Repair Parts Drawing

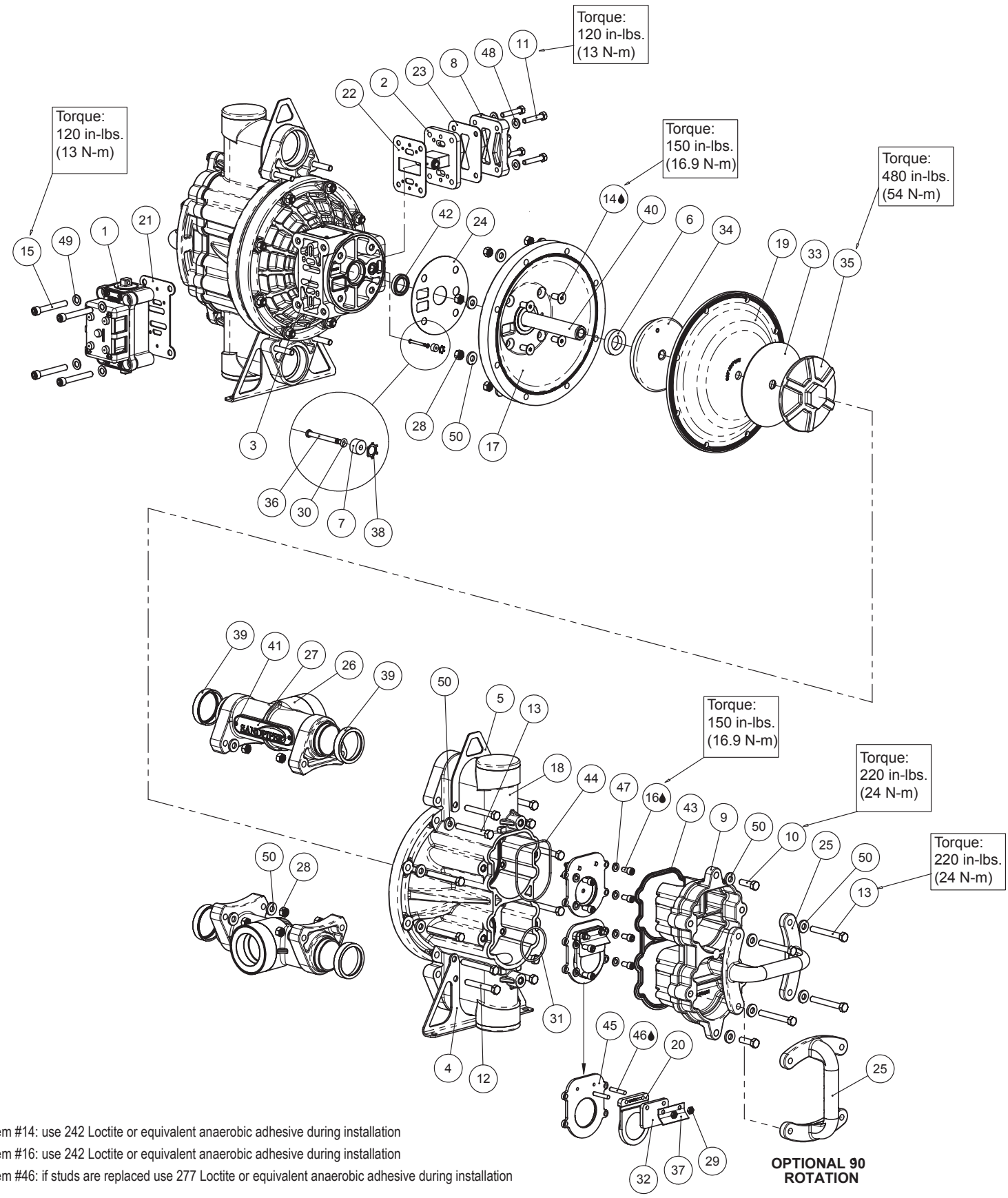

♦Item #14: use 242 Loctite or equivalent anaerobic adhesive during installation

♦Item #16: use 242 Loctite or equivalent anaerobic adhesive during installation

♦Item #46: if studs are replaced use 277 Loctite or equivalent anaerobic adhesive during installation

Composite Repair Parts List

Item	Part Number	Description	Qty
(1)	** 031.140.000	Air Valve Assembly (Integral Muffler)	1
	031.141.000	Air Valve Assembly (No Muffler)	1
(2)	095.110.558	Pilot Valve Assembly	1
3	114.024.551	Intermediate Assembly	1
4	115.174.115	Bracket, Foot	2
5	115.177.115	Bracket, Hanging	2
(6)	132.035.357	Bumper	2
(7)	135.034.506	Bushing, Plunger	2
8	165.118.551	Cap, Air Inlet	1
9	165.148.551	Cap, Clean Out	2
10	170.018.115	Capscrew, Hex-Hd, 3/8-16 x 1 1/4	4
11	170.069.115	Capscrew, Hex-Hd, 5/16-18 x 1 3/4	4
12	170.129.115	Capscew, Hex-Hd, 3/8-16 x 2 3/4	8
13	170.130.115	Capscrew, Hex-Hd, 3/8-16 x 3	24
14	171.015.115	Capscrew, Flat-Hd, 3/8-16 x 7/8	8
15	171.053.115	Capscrew, Socket-Hd, 3/8-16 x 2 1/2	4
16	171.102.110	CAPSCREW, Socket Hd, 5/16 -18 x .63	16
17	196.217.551	Chamber, Inner	2
18	196.218.552	Chamber, Outer	2
[19]	286.007.360	Diaphragm, Buna-N	2
	286.007.363	Diaphragm, Fluorocarbon FKM	2
	286.007.364	Diaphragm, EPDM	2
	286.007.365	Diaphragm, Neoprene	2
	286.007.354	Diaphragm, Santoprene	2
	286.007.356	Diaphragm, Hytrel	2
[20]	338.005.360	Flap Valve, Buna-N	4
	338.005.363	Flap Valve, Fluorocarbon FKM	4
	338.005.364	Flap Valve, EPDM	4
	338.005.365	Flap Valve, Neoprene	4
	338.010.356	Flap Valve, Hytrel	4
	338.010.357	Flap Valve, Urethane	4
(21)	360.093.360	Gasket, Main Air Valve	1
(22)	360.103.360	Gasket, Pilot Valve	1
(23)	360.104.360	Gasket, Air Inlet Cap	1
(24)	360.105.360	Gasket, Inner Chamber	2
25	405.013.551	Handle	2
26	518.222.552	Manifold	2
27	535.098.000	Plate, Name	2
28	545.005.115	Nut, Hex	24
29	547.002.110	Nut, Stop	8
(30)	560.001.360	O-ring	2
[31]	560.213.360	O-ring, Buna-N	2
	560.213.363	O-ring, Fluorocarbon FKM	2
	560.213.364	O-ring, EPDM	2
	560.213.365	O-ring, Neoprene	2
[32]	570.001.360	Hinge Pad, Buna-N	4
	570.001.363	Hinge Pad, Fluorocarbon FKM	4
	570.001.364	Hinge Pad, EPDM	4
	570.001.365	Hinge Pad, Neoprene	4
[33]	570.009.360	Pad, Wear, Buna-N	2
	570.009.363	Pad, Wear, Fluorocarbon FKM	2
	570.009.364	Pad, Wear, EPDM	2
	570.009.365	Pad, Wear, Neoprene	2
34	612.195.157	Plate, Inner Diaphragm	2
35	612.225.552	Plate, Outer Diaphragm (with stud)	2
(36)	620.007.114	Pin, Plunger	2
37	670.005.110	Retainer, Flap Valve	4
(38)	675.042.115	Ring, Retaining	2
[39]	675.073.360	Ring Sealing, Buna-N	4
	675.073.363	Ring Sealing, Fluorocarbon FKM	4
	675.073.364	Ring Sealing, EPDM	4
	675.073.365	Ring Sealing, Neoprene	4

Item	Part Number	Description	Qty
40	685.059.120	Rod, Diaphragm	1
41	710.021.115	Screw, Pan Head	4
(42)	720.004.360	Seal, U-cup	2
[43]	720.076.360	Seal, Clean Out Cap, Buna-N	2
	720.076.363	Seal, Clean Out Cap, Fluorocarbon FKM	2
	720.076.364	Seal, Clean Out Cap, EPDM	2
	720.076.365	Seal, Clean Out Cap, Neoprene	2
[44]	720.077.360	Seal, Seat, Buna-N	2
	720.077.363	Seal, Seat, Fluorocarbon FKM	2
	720.077.364	Seal, Seat, EPDM	2
	720.077.365	Seal, Seat, Neoprene	2
45	722.129.110	Seat, Check Valve (includes studs)	4
46	807.018.110	Stud	8
47	900.004.110	Washer, Lock 5/16	16
48	901.038.115	Washer, Flat 5/16	4
49	901.048.115	Washer, Flat 3/8	4
50	901.052.115	Washer, Flat 3/8	48

LEGEND:

◯ = Items contained within Air End Kits

□ = Items contianed within Wet End Kits

Parts underlined are only available for sale in kits

Note: *Kits contain components specific to the material codes.*
***Air End Kit does not include entire air valves assembly. It includes replacement sleeve and spool set, plus o-rings.*

Composite Repair Parts Drawing

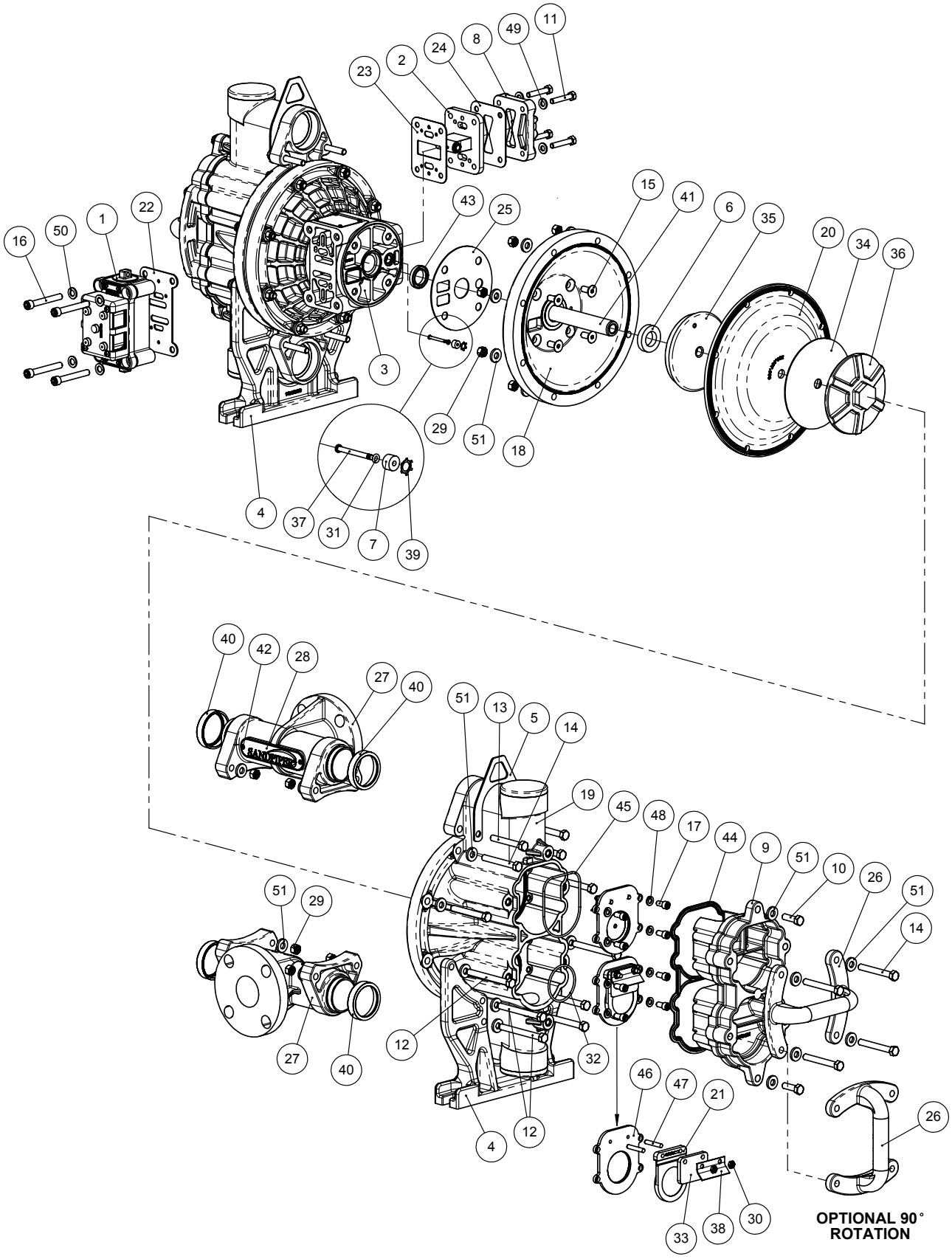

Composite Repair Parts List Flanged Manifold

Item	Part Number	Description	Qty
(1)	** 031.140.000	Air Valve Assembly (Integral Muffler)	1
	031.141.000	Air Valve Assembly (No Muffler)	1
(2)	095.110.558	Pilot Valve Assembly	1
3	114.024.551	Intermediate Assembly	1
4	115.179.552	Bracket, Foot	2
5	115.177.115	Bracket, Hanging	2
(6)	132.035.360	Bumper	2
(7)	135.034.506	Bushing, Plunger	2
8	165.118.551	Cap, Air Inlet	1
9	165.148.551	Cap, Clean Out	2
10	170.018.115	Capscrew, Hex-Hd, 3/8-16 x 1 1/4	4
11	170.069.115	Capscrew, Hex-Hd, 5/16-18 x 1 3/4	4
12	170.083.115	Capscrew, Hex-Hd, 3/8-16 x 3 3/4	12
13	170.129.115	Capscew, Hex-Hd, 3/8-16 x 2 3/4	4
14	170.130.115	Capscrew, Hex-Hd, 3/8-16 x 3	16
15	171.015.115	Capscrew, Flat-Hd, 3/8-16 x 7/8	8
16	171.053.115	Capscrew, Socket-Hd, 3/8-16 x 2 1/2	4
17	171.102.110B	CAPSCREW, Socket Hd, 3/8-16 x .63	16
18	196.217.551	Chamber, Inner	2
19	196.218.552	Chamber, Outer	2
[20]	286.007.360	Diaphragm, Buna-N	2
	286.007.363	Diaphragm, Fluorocarbon FKM	2
	286.007.364	Diaphragm, EPDM	2
	286.007.365	Diaphragm, Neoprene	2
	286.007.354	Diaphragm, Santoprene	2
	286.007.356	Diaphragm, Hytrel	2
[21]	338.005.360	Flap Valve, Buna-N	4
	338.005.363	Flap Valve, Fluorocarbon FKM	4
	338.005.364	Flap Valve, EPDM	4
	338.005.365	Flap Valve, Neoprene	4
	338.010.356	Flap Valve, Hytrel	4
	338.010.357	Flap Valve, Urethane	4
(22)	360.093.360	Gasket, Main Air Valve	1
(23)	360.103.360	Gasket, Pilot Valve	1
(24)	360.104.360	Gasket, Air Inlet Cap	1
(25)	360.105.360	Gasket, Inner Chamber	2
26	405.013.551	Handle	2
27	518.225.552	Manifold	2
28	535.098.000	Plate, Name	2
29	545.005.115	Nut, Hex	24
30	547.002.110	Nut, Stop	8
(31)	560.001.360	O-ring	2
[32]	560.213.360	O-ring, Buna-N	2
	560.213.363	O-ring, Fluorocarbon FKM	2
	560.213.364	O-ring, EPDM	2
	560.213.365	O-ring, Neoprene	2
[33]	570.001.360	Hinge Pad, Buna-N	4
	570.001.363	Hinge Pad, Fluorocarbon FKM	4
	570.001.364	Hinge Pad, EPDM	4
	570.001.365	Hinge Pad, Neoprene	4
[34]	570.009.360	Pad, Wear, Buna-N	2
	570.009.363	Pad, Wear, Fluorocarbon FKM	2
	570.009.364	Pad, Wear, EPDM	2
	570.009.365	Pad, Wear, Neoprene	2
35	612.195.157	Plate, Inner Diaphragm	2
36	612.225.552	Plate, Outer Diaphragm (with stud)	2
(37)	620.007.114	Pin, Plunger	2
38	670.005.110	Retainer, Flap Valve	4
(39)	675.042.115	Ring, Retaining	2
[40]	675.073.360	Ring Sealing, Buna-N	4
	675.073.363	Ring Sealing, Fluorocarbon FKM	4
	675.073.364	Ring Sealing, EPDM	4
	675.073.365	Ring Sealing, Neoprene	4

Item	Part Number	Description	Qty
41	685.059.120	Rod, Diaphragm	1
42	710.021.115	Screw, Pan Head	4
(43)	720.004.360	Seal, U-cup	2
[44]	720.076.360	Seal, Clean Out Cap, Buna-N	2
	720.076.363	Seal, Clean Out Cap, Fluorocarbon FKM	2
	720.076.364	Seal, Clean Out Cap, EPDM	2
	720.076.365	Seal, Clean Out Cap, Neoprene	2
[45]	720.077.360	Seal, Seat, Buna-N	2
	720.077.363	Seal, Seat, Fluorocarbon FKM	2
	720.077.364	Seal, Seat, EPDM	2
	720.077.365	Seal, Seat, Neoprene	2
46	722.129.110	Seat, Check Valve (includes studs)	4
47	807.018.110	Stud	8
48	900.004.110	Washer, Lock 5/16	16
49	901.038.115	Washer, Flat 5/16	4
50	901.048.115	Washer, Flat 3/8	4
51	901.052.115	Washer, Flat 3/8	56

LEGEND:

◯ = Items contained within Air End Kits

□ = Items contianed within Wet End Kits

Parts underlined are only available for sale in kits

Note: *Kits contain components specific to the material codes.*
***Air End Kit does not include entire air valves assembly. It includes replacement sleeve and spool set, plus o-rings.*

Service & Repair Kits

476.353.000 **Air End Kit**
Seals, O-rings, Gaskets, Retainer Rings, Aluminum Sleeve and spool set, pilot valve assembly

476.353.162 **Air End Kit**
Seals, O-rings, Gaskets, Retainer Rings, Brass/Stainless Sleeve and spool set, pilot valve assembly

476.354.360 **Wetted End Kit**
For Model HD20F1PBSPNS000/HD20F1PBSPBS000
Buna-N Diaphragms, Flap Valves, Hinge Pads, Seals, Wear Pads and Sealing Rings

476.354.363 **Wetted End Kit**
For Model HD20F1PVSPNS000/HD20F1PVSPBS000
FKM (Viton) Diaphragms, Flap Valves, Hinge Pads, Seals, Wear Pads and Sealing Rings

476.354.364 **Wetted End Kit**
For Model HD20F1PESPNS000/HD20F1PESPBS000
EPDM Diaphragms, Flap Valves, Hinge Pads, Seals, Wear Pads and Sealing Rings

476.354.365 **Wetted End Kit**
For Model HD20F1PNSPNS000/ HD20F1PNSPBS000
Neoprene Diaphragms, Flap Valves, Hinge Pads, Seals, Wear Pads and Sealing Rings

476.354.356 **Wetted End Kit**
For Model HD20F1PHSPNS000/HD20FHP1SPBS000
Hytrel Diaphragms, Flap Valves, Neoprene Hinge Pads, Seals, Wear Pads and Sealing Rings

476.354.632 **Wetted End Kit**
For Model HD20F1PPSPNS000/HD20F1PPSPBS000
Neoprene Diaphragms, Urethane Flap Valves, Neoprene Hinge Pads, Seals, Wear Pads and Sealing Rings

476.354.677 **Wetted End Kit**
For Model HD20FPJSPNS000/HD20FPJSPBS000
Santoprene Diaphragms, EPDM Flap Valves, Hinge Pads, Seals,Wear Pads and Seals

476.355.360 **Check Valve Module Kit**
For Model HD20F1PBSPNS000/HD20F1PBSPBS000
Seat, Buna-N Flap, Hinge Pad, Retainer (assembled)

476.355.363 **Check Valve Module Kit**
For Model HD20F1PVSPNS000/HD20F1PVSPBS000
Seat, FKM (Viton) Flap, Hinge Pad, Retainer (assembled)

476.355.364 **Check Valve Module Kit**
For Model HD20F1PESPNS000/HD20F1PESPBS000 & HD20F1PJSPNS000/HD20FJSPBS000
Seat, EPDM Flap, Hinge Pad, Retainer (assembled)

476.355.365 **Check Valve Module Kit**
For Model HD20F1PNSPNS000/ HD20F1PNSPBS000
Seat, Neoprene Flap, Hinge Pad, Retainer (assembled)

476.355.356 **Check Valve Module Kit**
For Model HD20F1PHSPNS000/HD20FHP1SPBS000
Seat, Hytrel Flap, Neoprene Hinge Pad, Retainer (assembled)

476.355.632 **Check Valve Module Kit**
For Model HD20F1PPSPNS000/HD20F1PPSPBS000
Seat, Urethane Flap, Neoprene Hinge Pad, Retainer (assembled)

476.356.360 **Check Valve Seal Kit**
For Model HD20F1PBSPNS000/HD20F1PBSPBS000
Buna-N Seat seals and Cap Seals

476.356.363 **Check Valve Seal Kit**
For Model HD20F1PVSPNS000/HD20F1PVSPBS000
FKM (Viton) Seat seals and Cap Seals

476.356.364* **Check Valve Seal Kit**
For Model HD20F1PESPNS000/HD20F1PESPBS000 & HD20F1PJSPNS000/HD20FJSPBS000
EPDM Seat seals and Cap Seals

476.356.365** **Check Valve Seal Kit**
For Model HD20F1PNSPNS000/ HD20F1PNSPBS000, HD20F1PHSPNS000/HD20FHP1SPBS000 & HD20F1PPSPNS000/HD20F1PPSPBS000
Neoprene Seat seals and Cap Seals

* Pumps fitted with Santoprene diaphragms use EPDM seal kit, ** Pumps fitted with Hytrel or Urethane flap valves use Neoprene seal kit

Material Codes - The Last 3 Digits of Part Number

000.....Assembly, sub-assembly; and some purchased items
010.....Cast Iron
015.....Ductile Iron
020.....Ferritic Malleable Iron
080.....Carbon Steel, AISI B-1112
110.....Alloy Type 316 Stainless Steel
111.....Alloy Type 316 Stainless Steel (Electro Polished)
112.....Alloy C
113.....Alloy Type 316 Stainless Steel (Hand Polished)
114.....303 Stainless Steel
115.....302/304 Stainless Steel
117.....440-C Stainless Steel (Martensitic)
120.....416 Stainless Steel (Wrought Martensitic)
148.....Hardcoat Anodized Aluminum
150.....6061-T6 Aluminum
152.....2024-T4 Aluminum (2023-T351)
155.....356-T6 Aluminum
156.....356-T6 Aluminum
157.....Die Cast Aluminum Alloy #380
158.....Aluminum Alloy SR-319
162.....Brass, Yellow, Screw Machine Stock
165.....Cast Bronze, 85-5-5-5
166.....Bronze, SAE 660
170.....Bronze, Bearing Type, Oil Impregnated
180.....Copper Alloy
305.....Carbon Steel, Black Epoxy Coated
306.....Carbon Steel, Black PTFE Coated
307.....Aluminum, Black Epoxy Coated
308.....Stainless Steel, Black PTFE Coated
309.....Aluminum, Black PTFE Coated
313.....Aluminum, White Epoxy Coated
330.....Zinc Plated Steel
332.....Aluminum, Electroless Nickel Plated
333.....Carbon Steel, Electroless Nickel Plated
335.....Galvanized Steel
337.....Silver Plated Steel
351.....Food Grade Santoprene®
353.....Geolast; Color: Black
354.....Injection Molded #203-40 Santoprene® Duro 40D +/-5; Color: RED
356.....Hytrel®
357.....Injection Molded Polyurethane
358.....Urethane Rubber (Some Applications) (Compression Mold)
359.....Urethane Rubber
360.....Nitrile Rubber Color coded: RED
363.....FKM (Fluorocarbon) Color coded: YELLOW
364.....EPDM Rubber Color coded: BLUE
365.....Neoprene Rubber Color coded: GREEN
366.....Food Grade Nitrile
368.....Food Grade EPDM
371.....Philthane (Tuftane)
374.....Carboxylated Nitrile
375.....Fluorinated Nitrile
378.....High Density Polypropylene
379.....Conductive Nitrile
408.....Cork and Neoprene
425.....Compressed Fibre
426.....Blue Gard
440.....Vegetable Fibre
500.....Delrin® 500
502.....Conductive Acetal, ESD-800
503.....Conductive Acetal, Glass-Filled
506.....Delrin® 150
520.....Injection Molded PVDF Natural color
540.....Nylon
542.....Nylon
544.....Nylon Injection Molded
550.....Polyethylene
551.....Glass Filled Polypropylene
552.....Unfilled Polypropylene
555.....Polyvinyl Chloride
556.....Black Vinyl
558.....Conductive HDPE
570.....Rulon II®
580.....Ryton®
600.....PTFE (virgin material) Tetrafluorocarbon (TFE)
603.....Blue Gylon®
604.....PTFE
606.....PTFE
607.....Envelon
608.....Conductive PTFE
610.....PTFE Encapsulated Silicon
611.....PTFE Encapsulated FKM
632.....Neoprene/Hytrel®
633.....FKM/PTFE
634.....EPDM/PTFE
635.....Neoprene/PTFE
637.....PTFE, FKM/PTFE
638.....PTFE, Hytrel®/PTFE
639.....Nitrile/TFE
643.....Santoprene®/EPDM
644.....Santoprene®/PTFE
656.....Santoprene® Diaphragm and Check Balls/EPDM Seats
661.....EPDM/Santoprene®
666.....FDA Nitrile Diaphragm, PTFE Overlay, Balls, and Seals
668.....PTFE, FDA Santoprene®/PTFE
677.....Santoprene, EPDM

- Delrin and Hytrel are registered tradenames of E.I. DuPont.
- Nylatron is a registered tradename of Polymer Corp.
- Gylon is a registered tradename of Garlock, Inc.
- Santoprene is a registered tradename of Exxon Mobil Corp.
- Rulon II is a registered tradename of Dixion Industries Corp.
- Ryton is a registered tradename of Phillips Chemical Co.
- Valox is a registered tradename of General Electric Co.

RECYCLING

Many components of SANDPIPER® AODD pumps are made of recyclable materials. We encourage pump users to recycle worn out parts and pumps whenever possible, after any hazardous pumped fluids are thoroughly flushed.

Air Distribution Valve Assembly

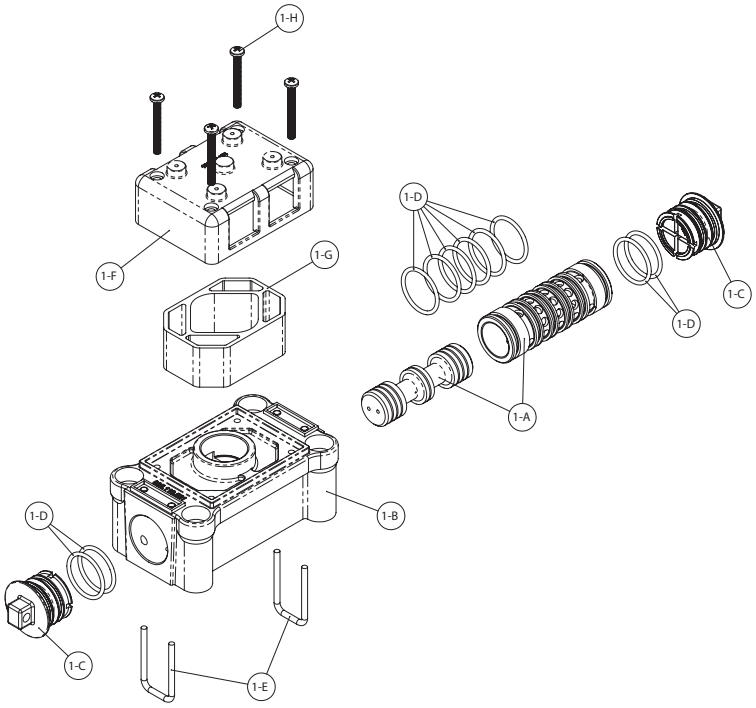

Air Distribution Valve Servicing

See repair parts drawing, remove screws.

Step 1: Remove air valve from pump (1).
Step 2: Remove retainer (1-E).
Step 3: Remove end caps (1-C).
Step 4: Remove spool part of (1-A) Inspect for wear or damage.
Step 5: Press sleeve part of (1-A) from body (1-B) Inspect for wear or damage.
Step 6: Inspect o-rings (1-D) and replace as needed.
Step 7: Lubricate o-rings (1-D) and press sleeve (1-A) in body (1-B).
Step 8: Press sleeve part of (1-A) into body (1-B).
Step 9: Reassemble in reverse order.

Note: Sleeve and spool (1-A) set is match ground to a specified clearance. Individual sleeves and spools (1-A) cannot be interchanged.

Air Valve Assembly Parts List

Item	Part Number	Description	Qty
1	031-140-000	Air Valve Assembly	1
1-A	031-139-000	Sleeve and Spool Set	1
1-B	095-119-551	Body, Air Valve	1
1-C	165-140-551	End Cap	2
1-D	560-020-360	O-Ring	10
1-E	675-068-115	Retainer	2
1-F	165-096-551	Cap, Muffler	1
1-G	530-028-550	Muffler	1
1-H	710-015-115	Screws, Self tapping	4

For pumps with piped exhaust:

1	031-141-000	Air Valve Assembly	1

(Includes all items used on 031-140-100 minus items 1-F,1-G & 1-H)

Air Valve Assembly Parts List Brass / Stainless

Item	Part Number	Description	Qty
1	031-140-162	Air Valve Assembly	1
1-A	031-139-162	Sleeve and Spool Set	1
1-B	095-119-551	Body, Air Valve	1
1-C	165-140-551	End Cap	2
1-D	560-020-360	O-Ring	10
1-E	675-068-115	Retainer	2
1-F	165-096-551	Cap, Muffler	1
1-G	530-028-550	Muffler	1
1-H	710-015-115	Screws, Self tapping	4

For pumps with piped exhaust:

1	031-141-162	Air Valve Assembly	1

(Includes all items used on 031-140-162 minus items 1-F,1-G & 1-H)

⚠ IMPORTANT



Read these instructions completely, before installation and start-up. It is the responsibility of the purchaser to retain this manual for reference. Failure to comply with the recommendations stated in this manual will damage the pump, and void factory warranty.

Air Valve with Stroke Indicator Assembly

Note: Stroke Indicator is standard on Spill Containment models

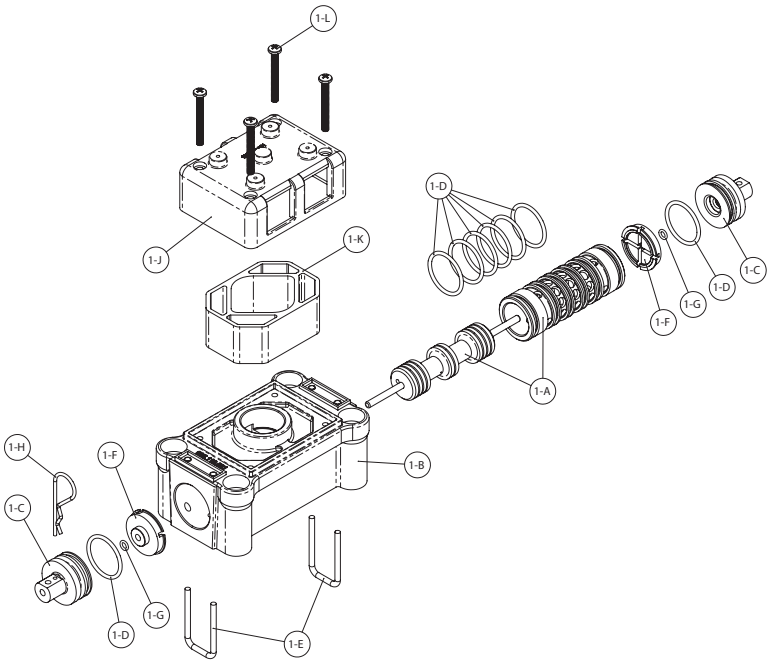

Air Distribution Valve Servicing

See repair parts drawing, remove screws.

Step 1: air valve from pump (1).
Step 2: Remove retainer (1-E).
Step 3: end caps (1-C) & bumpers (1-E) inspect o-rings 1-G.
Step 4: Remove spool part of (1-A) Inspect for wear or damage.
Step 5: Press sleeve part of (1-A) from body (1-B) Inspect for wear or damage.
Step 6: Inspect o-rings (1-D) and replace as needed.
Step 7: Lubricate o-rings (1-D) and press sleeve (1-A) in body (1-B).
Step 8: Press sleeve part of (1-A) into body (1-B).
Step 9: Reassemble in reverse order

Note: Sleeve and spool (1-A) set is match ground to a specified clearance. Individual sleeves and spools (1-A) cannot be interchanged.

Air Valve Assembly Parts List

Item	Part Number	Description	Qty
1	031-146-000	Air Valve Assembly	1
1-A	031-143-000	Sleeve and Spool Set w/Pins	1
1-B	095-119-551	Body, Air Valve	1
1-C	165-156-147	Cap, End	2
1-D	560-020-360	O-Ring	8
1-E	675-068-115	Retainer	2
1-F	132-039-552	Bumper	2
1-G	560-029-360	O-Ring	2
1-H	210-008-330	Clip, Safety	2
1-J	165-096-551	Cap, Muffler	1
1-K	530-028-550	Muffler	1
1-L	710-015-115	Screws, Self tapping	4

For pumps with piped exhaust:

1	031-147-000	Air Valve Assembly	1

(includes all items on 031-146-000 minus 1-J, 1-K, & 1-L)

Pilot Valve Assembly

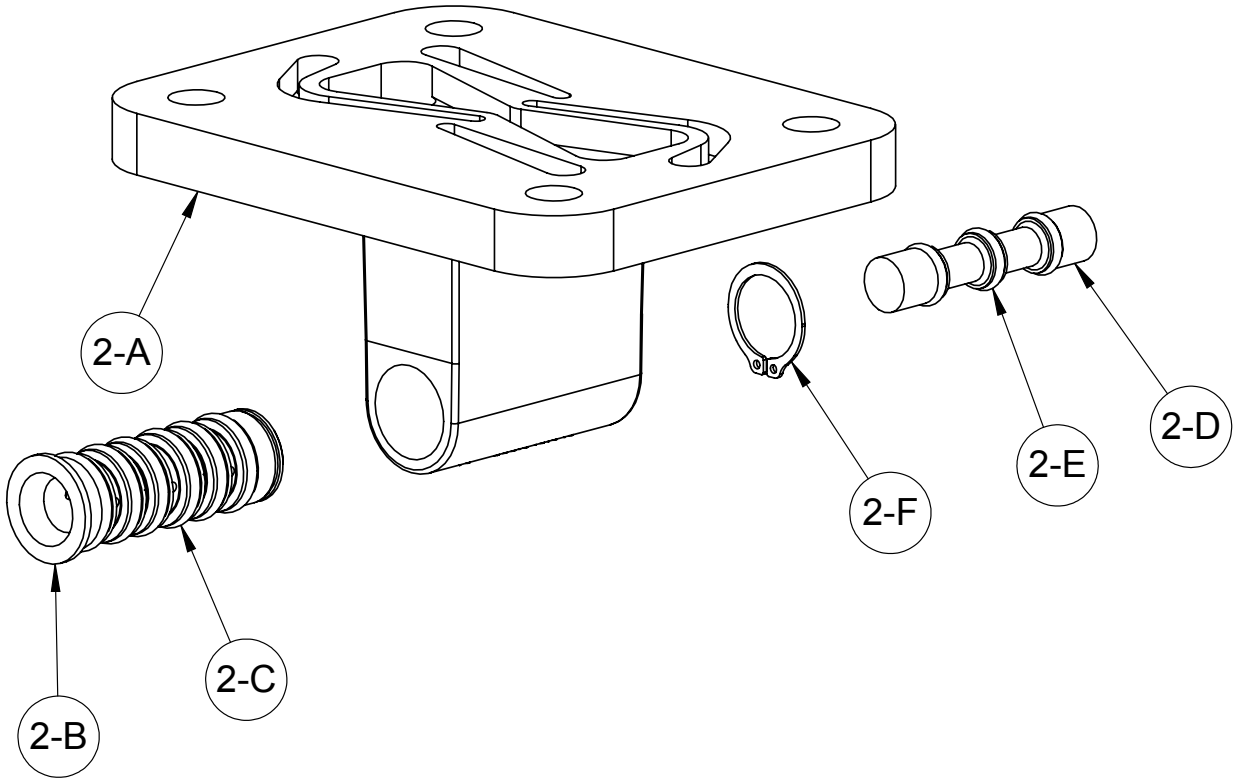

Pilot Valve Servicing

With Pilot Valve removed from pump.

Step 1: Remove snap ring (2-F).

Step 2: Remove sleeve (2-B), inspect O-Rings (2-C), replace if required.

Step 3: Remove spool (2-D) from sleeve (2-B), inspect O-Rings (2E), replace if required.

Step 4: Lightly lubricate O-Rings (2-C) and (2-E).

Reassemble in reverse order.

Pilot Valve Assembly Parts List

Item	Part Number	Description	Qty
2	095-110-558	Pilot Valve Assembly	1
2-A	095-095-558	Valve Body	1
2-B	755-052-000	Sleeve (With O-Rings)	1
2-C	560-033-360	O-Ring (Sleeve)	6
2-D	775-055-000	Spool (With O-Rings)	1
2-E	560-023-360	O-Ring (Spool)	3
2-F	675-037-080	Retaining Ring	1

Intermediate Assembly

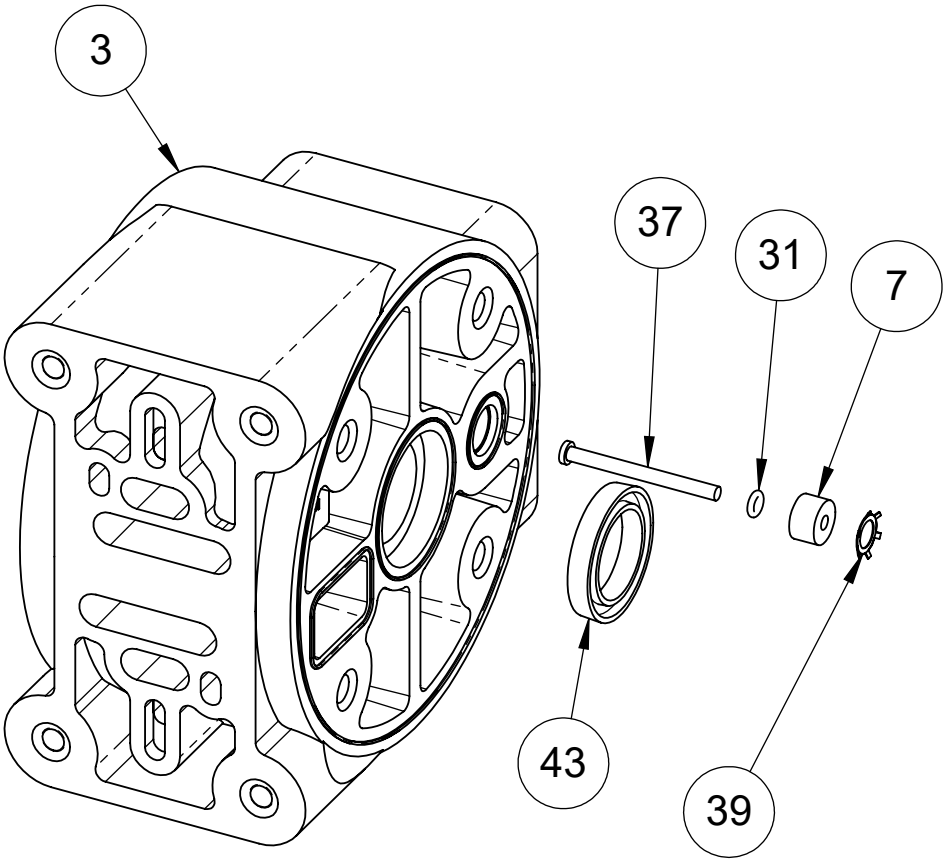

Intermediate Assembly Drawing

Step 1: Remove plunger, actuator (37) from center of intermediate pilot valve cavity.
Step 2: Remove ring, retaining (39), discard.
Step 3: Remove bushing, plunger (7), inspect for wear and replace if necessary with genuine parts.
Step 4: Remove O-ring (31), inspect for wear and replace if necessary with genuine parts.
Step 5: Lightly lubricate O-ring (31) and insert into intermediate.
Step 6: Reassemble in reverse order.
Step 7: Remove seal, diaphragm rod (43).
Step 8: Clean seal area, lightly lubricate and install new seal, diaphragm rod (41, not shown).

Diaphragm Service Drawing, Non-Overlay

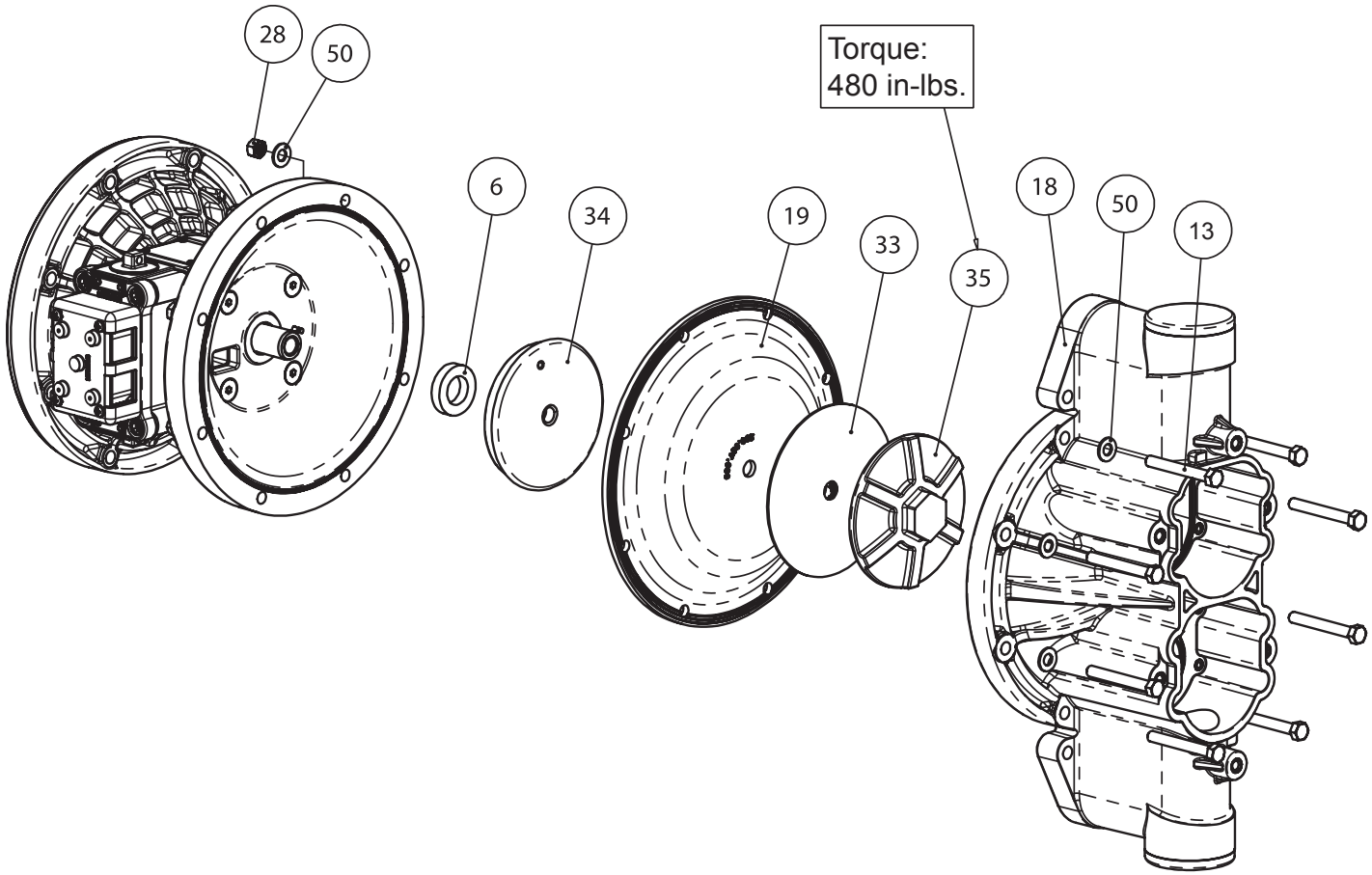

Diaphragm Servicing

Step 1: With manifolds and outer chambers removed, remove diaphragm assemblies from diaphragm rod. **DO NOT** use a pipe wrench or similar tool to remove assembly from rod. Flaws in the rod surface may damage seals. Soft jaws in a vise are recommended to prevent diaphragm rod damage.

Step 1.A: NOTE: Not all inner diaphragm plates are threaded. Some models utilize a through hole in the inner diaphragm plate. If required to separate diaphragm assembly, place assembly in a vise, gripping on the exterior cast diameter of the inner plate. Turn the outer plate clockwise to separate the assembly.

Always inspect diaphragms for wear cracks or chemical attack. Inspect inner and outer plates for deformities, rust scale and wear. Inspect intermediate bearings for elongation and wear. Inspect diaphragm rod for wear or marks.
Clean or repair if appropriate. Replace as required.

Step 2: Reassembly: There are two different types of diaphragm plate assemblies utilized throughout the Sandpiper product line: Outer plate with a threaded stud, diaphragm, and a threaded inner plate.

Outer plate with a threaded stud, diaphragm, and an inner plate with through hole. Secure threaded inner plate in a vise. Ensure that the plates are being installed with the outer radius against the diaphragm.

Step 3: Lightly lubricate, with a compatible material, the inner faces of both outer and inner diaphragm plates when using on non Overlay diaphragms (For EPDM water is recommended). No lubrication is required.

Step 4: Push the threaded outer diaphragm plate through the center hole of the diaphragm. **Note:** Most diaphragms are installed with the natural bulge out towards the fluid side. S05, S07, and S10 non–metallic units are installed with the natural bulge in towards the air side.

Step 5: Thread or place, outer plate stud into the inner plate. For threaded inner plates, use a torque wrench to tighten the assembly together. Torque values are called out on the exploded view.

Repeat procedure for second side assembly. Allow a minimum of 15 minutes to elapse after torquing, then re-torque the assembly to compensate for stress relaxation in the clamped assembly.

Step 6: Thread one assembly onto the diaphragm rod with sealing washer (when used) and bumper.

Step 7: Install diaphragm rod assembly into pump and secure by installing the outer chamber in place and tightening the capscrews.

Step 8: On opposite side of pump, thread the remaining assembly onto the diaphragm rod. Using a torque wrench, tighten the assembly to the diaphragm rod. Align diaphragm through bolt holes, always going forward past the recommended torque. Torque values are called out on the exploded view. **NEVER** reverse to align holes, if alignment cannot be achieved without damage to diaphragm, loosen complete assemblies, rotate diaphragm and reassemble as described above.

Step 9: Complete assembly of entire unit.

⚠ IMPORTANT



Read these instructions completely, before installation and start-up. It is the responsibility of the purchaser to retain this manual for reference. Failure to comply with the recommendations stated in this manual will damage the pump, and void factory warranty.

5 - YEAR Limited Product Warranty

Warren Rupp, Inc. ("Warren Rupp") warrants to the original end-use purchaser that no product sold by Warren Rupp that bears a Warren Rupp brand shall fail under normal use and service due to a defect in material or workmanship within five years from the date of shipment from Warren Rupp's factory. Warren Rupp brands include Warren Rupp®,SANDPIPER®, SANDPIPER Signature Series™, MARATHON®, Porta-Pump®, SludgeMaster™ and Tranquilizer®.

The use of non-OEM replacement parts will void (or negate) agency certifications, including CE, ATEX, CSA, 3A and EC1935 compliance (Food Contact Materials). Warren Rupp, Inc. cannot ensure nor warrant non-OEM parts to meet the stringent requirements of the certifying agencies.

~ See complete warranty at https://www.sandpiperpump.com/

SANDPIPER®

EC Declaration of Conformity

Manufacturer:
Warren Rupp, Inc.
800 N. Main Street
Mansfield, Ohio, 44902 USA

Certifies that Air-Operated Double Diaphragm Pump Models: DSB Series, DMF Series, G Series, HDB Series, HDF Series, HP Series, F Series, MS Series, S Series, SL Series, SP Series, SSB Series, T Series, U1F Series, WR Series; High Pressure Pump Models: EH Series, GH Series, SH Series; Submersible Pump Models: SMA3 Series, SPA Series; and Surge Dampener/ Suppressor Models: DA Series, TA Series comply with the European Community Directive 2006/42/EC on Machinery, according to Annex VIII. This product has used Harmonized Standard EN809:2012, Pumps and Pump Units for Liquids - Common Safety Requirements, to verify conformance.

October 3, 2022
DATE/APPROVAL/TITLE:

Technical File on record with:
DEKRA Certification B.V.
Meander 1051
6825 MJ Arnhem
The Netherlands

Signature of authorized person

Dennis Hall
Printed name of authorized person

Engineering Manager
Title

IDEX

CE

SANDPIPER®

EC Declaration of Conformity

Manufacturer:
Warren Rupp, Inc.
800 N. Main Street
Mansfield, Ohio, 44902 USA

Certifies that Air-Operated Double Diaphragm Pump Models: DSB Series, DMF Series, G Series, HDB Series, HDF Series, HP Series, F Series, MS Series, S Series, SL Series, SP Series, SSB Series, T Series, U1F Series, WR Series; High Pressure Pump Models: EH Series, GH Series, SH Series; Submersible Pump Models: SMA3 Series, SPA Series; and Surge Dampener/ Suppressor Models: DA Series, TA Series comply with the United Kingdom Statutory Instruments 2008 No. 1597, The Supply of Machinery (Safety) Regulations 2008, according to Annex VIII. This product has used Designated Standard EN809:2012, Pumps and Pump Units for Liquids - Common Safety Requirements, to verify conformance.

October 17, 2022

DATE/APPROVAL/TITLE:

Technical File on record with:
DEKRA Certification UK Limited
Stokenchurch House
Oxford Road
Stokenchurch
HP14 3SX

Signature of authorized person

Dennis Hall

Printed name of authorized person

Engineering Manager

Title

IDEX

UK CA