HHLF "HIGH OUTPUT"

2"x2" Self-Priming Centrifugal Pump

MP Pumps has extended the performance range of the current HHLF series by designing a larger (7.5" diameter) impeller and matching volute. The new impeller and volute will fit into the existing HHLF "HR" housing. An o-ring has also been added to the discharge port for increased sealing at the higher pressures. Total dynamic head (TDH) has increased from 190' to 250'.

The HHLF series is available close coupled to NEMA "C" Face electric motors or as PumPAKs®. The engine drive models are capable of coupling to both gasoline and diesel engines with 1" keyed drive shafts. Pedestal mounted pumps are also available.

The volute and impeller are removable and easily replaced.

The HHLF "HO" pumps are ABS type approved and meet USCG specifications for auxillary fire control (46 CFR compliant).

ABS Type Approval for the HHLF, HHLF 1.5 & HHLF HO - Download PDF



Application

- Agricultural
- Industrial
- Marine

Drive Sleeve

- 304 Stainless Steel

Features

- 46 CFR Compliant
- ABS Type Approved

SPECIFICATIONS:

Suction And Discharge	2" x 2" NPT
Flow	Flows to 150 GPM
Head Feet	Up to 250 TDH
Impeller	Silicon Bronze CA 875
Drive Options	Close coupled 184TC, Close coupled 215TC, Engine Drive, Hydraulic Drive
Seal	Carbon/Ceramic/Viton-Type 21, Other Seals Available
Housing	Cast Iron Class 30 or Silicon Bronze CA 875
Abs Type Approved	Yes
46 Cfr Compliant	Yes
Mounting Options	Close Coupled to NEMA "C" Face Motor Frame, Pedestal, PumPak®
Adaptor	Cast Iron Class 30 or Silicon Bronze CA 875

HHLF "HIGH OUTPUT"

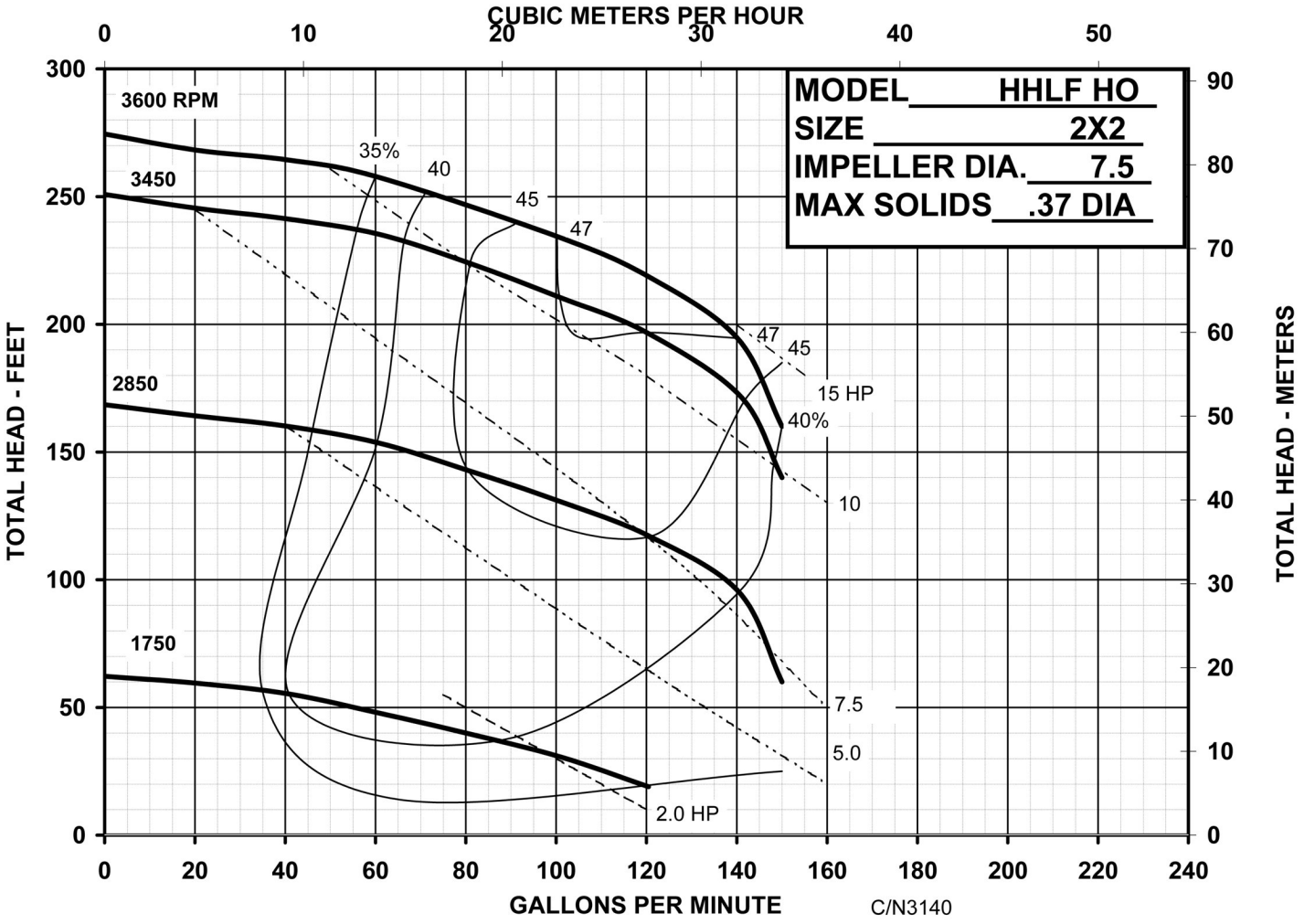

34800 BENNETT - FRASER, MI 48026-1686
(586) 293-8240 - FAX (586) 293-8469
(800) 563-8006 - www.mppumps.com

DRAWING NO.
38093

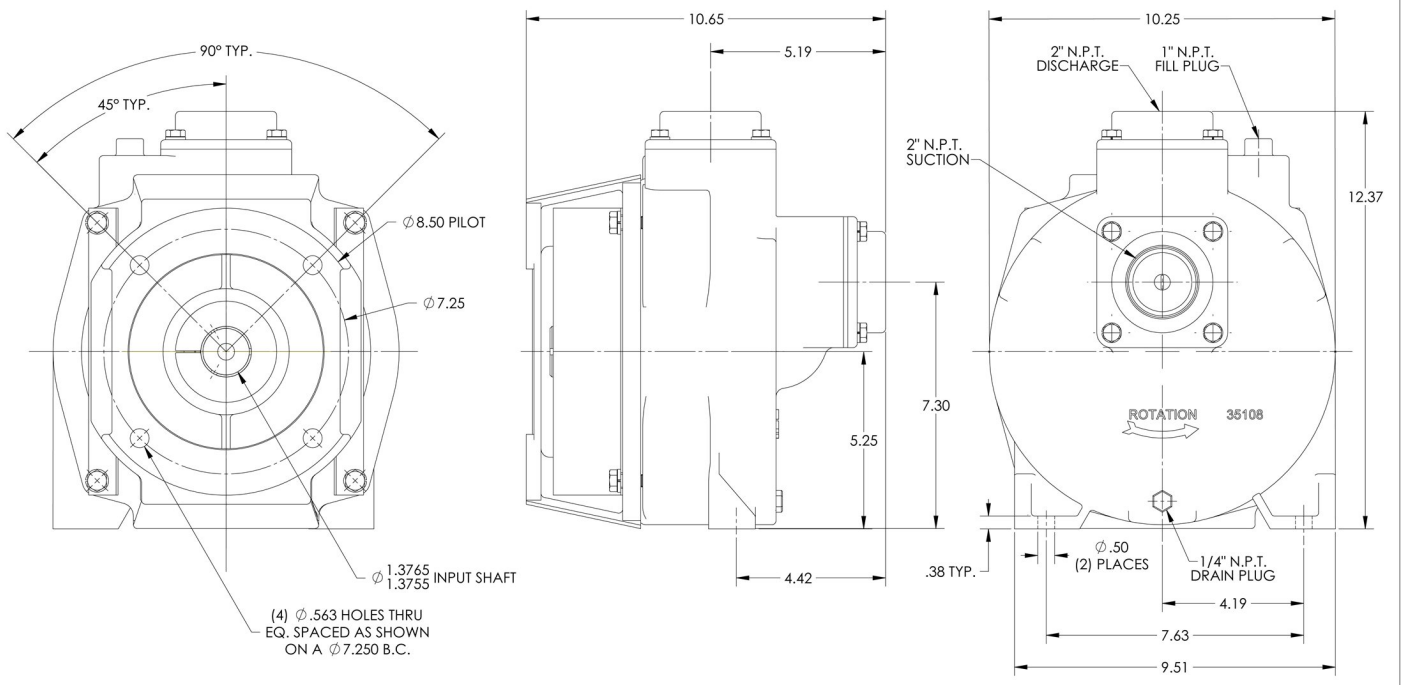

WITH CLOSED COUPLED MOTOR 215TC MOUNTINGS MAX 15 HP

REV	DESCRIPTION	DRAWN	DATE	EN
G				
F				
E				
D				
C				
B				
A				

UNLESS OTHERWISE NOTED
THIRD ANGLE PROJECTION

DO NOT SCALE

MP PUMPS, INC.
FRASER, MICHIGAN 48026, U.S.A.

MATERIAL: CAST IRON WITH-BRONZE IMPELLER AND VOLUTE

DRAWN BY	DATE COMP.	APPROV.	SCALE	MADE FOR	MADE FROM
J.A.M.	12-22-11	D.D.	FULL		

NAME: **HHLF2HO PPK C: 7.5IMP 215TC**

DRAWING NO: **38093**

NOTE: THIS DRAWING OR PRINT, PROPERTY OF MPPUMPS,INC, CONTAINS PROPRIETARY AND CONFIDENTIAL INFORMATION. IT SHALL BE USED ONLY AS APPROVED BY MPPUMPS AND SHALL NOT BE GIVEN TO OTHERS OR COPIED WITHOUT THE WRITTEN CONSENT OF MPPUMPS. RETURN TO MPPUMPS PROMPTLY WHEN REQUESTED.

HHLF "HIGH OUTPUT"

38089

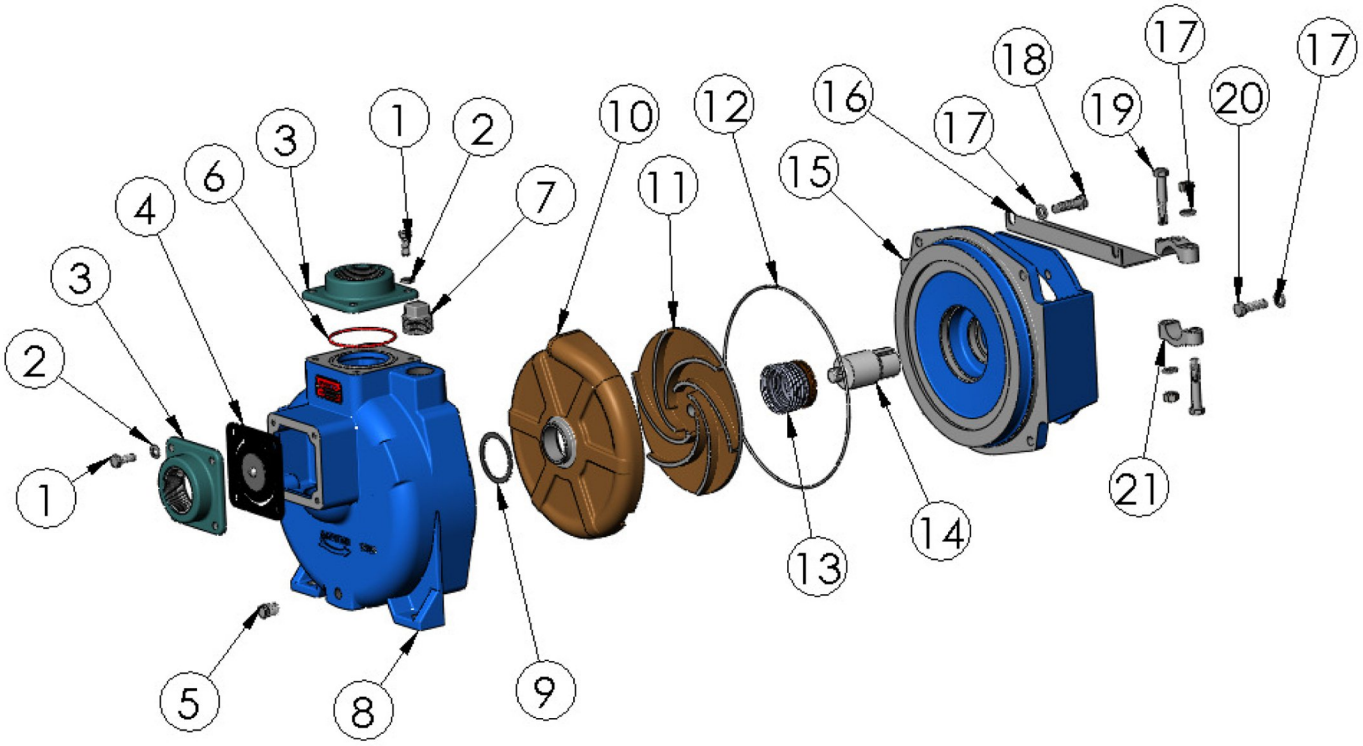

	ITEM NO.	PART NO.	DESCRIPTION	QTY.		ITEM NO.	PART NO.	DESCRIPTION	QTY.
	1	21242	CAPSCREW - 5/16"-18 X 7/8" - S.S.	8	*	12	28907	O-RING - AS-568-175 - VITON	1
	2	21238	LOCKWASHER - 5/16" - S.S.	8	*	13	29533	SEAL - Ø1.5 T-21	1
	3	22311	FLANGES- 2" N.P.T. - CAST	2		14	38825	DRIVE SLEEVE S.S. - Ø1.0"	1
*	4	23022	FLAPPER ASSEMBLY	1		15	38094	ADAPTER C.I. - PEM	1
	5	41475	PIPE PLUG - 1/4" N.P.T. - STL	1		16	29192	CLAMP GUARD - STEEL	1
*	6	37141	O-RING - VITON	1		17	21266	LOCKWASHER - 3/8" - S.S.	10
	7	41483	PIPE PLUG - 1" N.P.T.	1		18	21259	HEX HD. CAPSCREW S.S. - 3/8-16 X	4
	8	35109	HOUSING - CAST	1		19	21269	HEX HD. CAPSCREW S.S. - 3/8-16 X	2
*	9	28908	GASKET - VITON	1		20	21274	CAPSCREW S.S. - 3/8"-16 X 1.25	4
	10	38051	VOLUTE B	1		21	22356	CLAMP S.S. - 1"	2
	11	38049	IMPELLER B - Ø7.50	1					

*** SUGGESTED REPLACEMENT PARTS**

38093

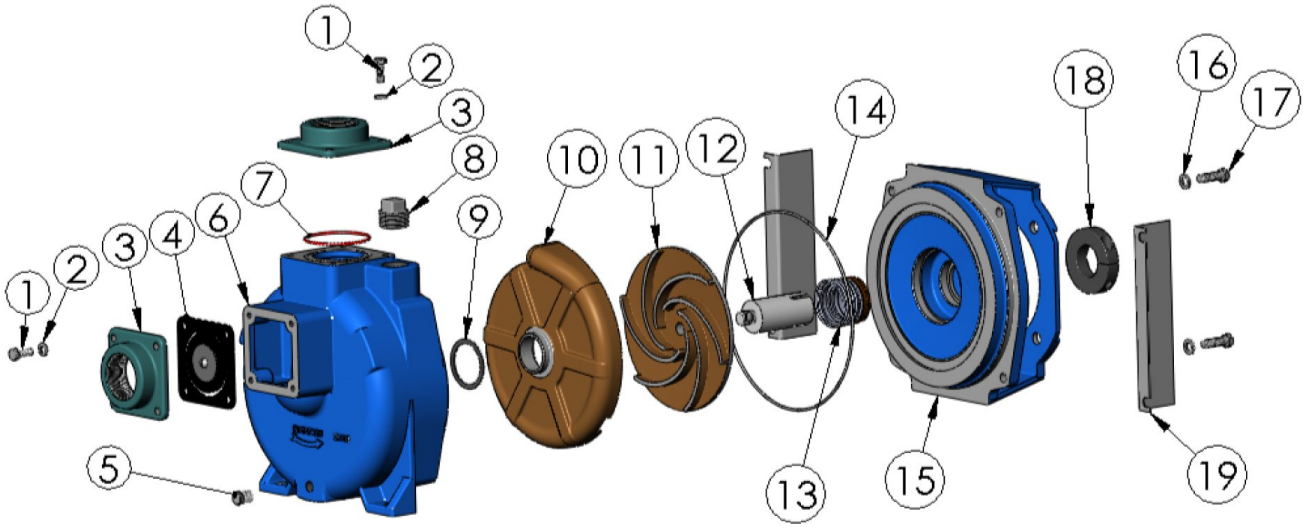

	ITEM NO.	PART NO.	DESCRIPTION	QTY.		ITEM NO.	PART NO.	DESCRIPTION	QTY.
	1	21242	CAPSCREW - 5/16"-18 X 7/8" - S.S.	8		11	38049	IMPELLER B - Ø7.50	1
	2	21238	LOCKWASHER - 5/16" - S.S.	8		12	38090	DRIVE SLEEVE S.S. - Ø1.38"	1
	3	22311	FLANGES- 2" N.P.T. - CAST	2	*	13	29533	SEAL - Ø1.5 T-21	1
*	4	23022	FLAPPER ASSEMBLY	1	*	14	28907	O-RING - AS-568-175 - VITON	1
	5	41475	PIPE PLUG - 1/4" N.P.T. - STL	1		15	38091	ADAPTER C.I. - CC MTR	1
	6	35109	HOUSING - CAST	1		16	21266	LOCKWASHER - 3/8" - S.S.	6
*	7	37141	O-RING - VITON	1		17	21274	CAPSCREW - 3/8"-16 X 1.25 - S.S.	4
	8	41483	PIPE PLUG - 1" N.P.T.	1		18	31312	CLAMP STL. - 1.5 I.D.	1
*	9	28908	GASKET - VITON	1		19	29192	CLAMP GUARD - STEEL	2
	10	38051	VOLUTE B	1					

*** SUGGESTED REPLACEMENT PARTS**

HHLF "HIGH OUTPUT"

38088

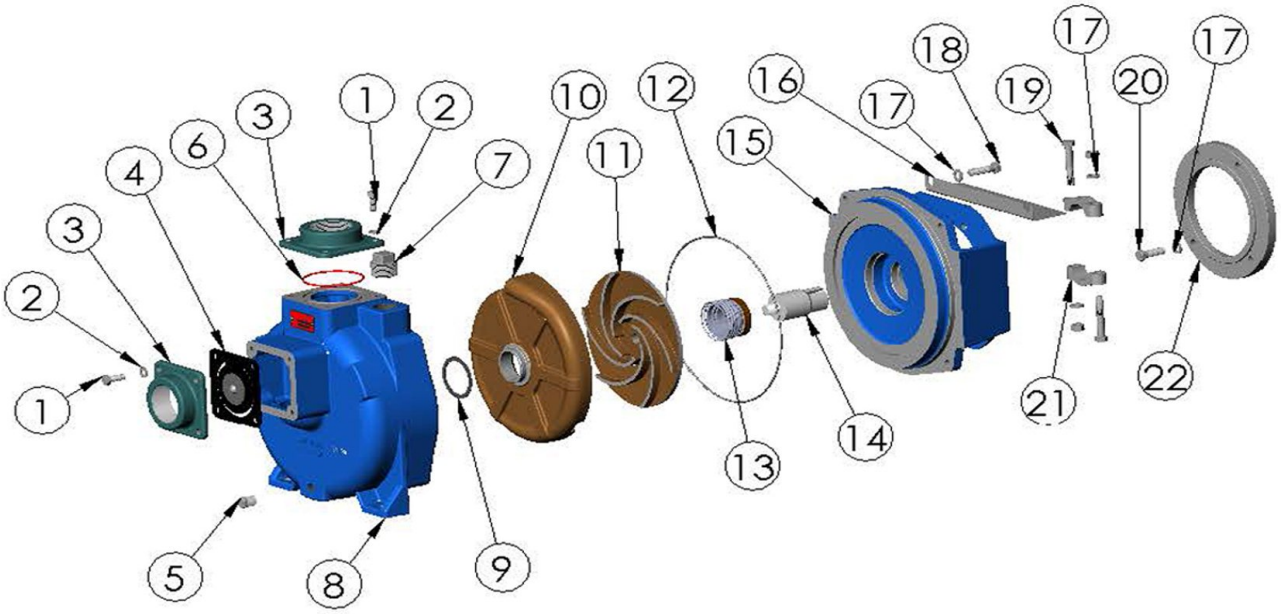

	ITEM NO.	PART NO.	DESCRIPTION	QTY.
	1	21242	CAPSCREW - 5/16"-18 X 7/8" - S.S.	8
	2	21238	LOCKWASHER - 5/16" - S.S.	8
	3	22311	FLANGES- 2" N.P.T. - CAST	2
*	4	23022	FLAPPER ASSEMBLY	1
	5	41475	PIPE PLUG - 1/4" N.P.T. - STL	1
*	6	37141	O-RING - VITON	1
	7	41483	PIPE PLUG - 1" N.P.T.	1
	8	35109	HOUSING - CAST	1
*	9	28908	GASKET - VITON	1
	10	38051	VOLUTE B	1
	11	38049	IMPELLER B - Ø7.50	1

	ITEM NO.	PART NO.	DESCRIPTION	QTY.
*	12	28907	O-RING - AS-568-175 - VITON	1
*	13	29533	SEAL - Ø1.5 T-21	1
	14	28825	DRIVE SLEEVE S.S. - Ø1.0"	1
	15	38094	ADAPTER C.I. - PEM	1
	16	29192	CLAMP GUARD - STEEL	1
	17	21266	LOCKWASHER - 3/8" - S.S.	10
	18	21259	HEX HD. CAPSCREW S.S. - 3/8-16 X	4
	19	21269	HEX HD. CAPSCREW S.S. - 3/8-16 X	2
	20	21274	CAPSCREW S.S. - 3/8"-16 X 1.25	4
	21	22356	CLAMP S.S. - 1"	2
	22	29339	ADAPTER PLATE STL. - W/ENGINE	1
	NOT SHOWN	22655	HEX HD. JAM NUT - S.S.	1
	NOT SHOWN	39530	METRIC L'WASHER - S.S.	1

*** SUGGESTED REPLACEMENT PARTS**