HHLF HYDRAULIC

1-1/2" or 2" x 1-1/2" or 2" High Head Low Flow Self Priming Centrifugal Pump

HHLF "HR" high pressure self-priming centrifugal pumps meet USCG specifications for auxiliary fire control.

The high suction centerline and impeller design eliminates premature priming loss while ensuring consistent priming capability. The HHLF pump is capable of achieving up to 25 feet suction lift.

The volute and impeller are removable and easily replaced.

Application

- Agricultural
- Commercial
- Industrial
- Marine
- OEM

Drive Sleeve

- 304 Stainless Steel

Features

- 46 CFR Compliant
- ABS Type Approved

SPECIFICATIONS:

Suction And Discharge	1-1/2" x 1-1/2" NPT, 2" x 2" NPT
Materials Of Construction	Bronze, Cast iron
Flow	Up to 180 GPM
Head Feet	Up to 300'
Impeller	6.7" cast iron Class 30 or silicon bronze CA 875
Drive Options	Hydraulic motor .73 cu. in.
Seal	Special seal material combinations available (consult factory), Standard carbon / ceramic / Viton
Adaptor	Cast Iron Class 30 or Silicon Bronze CA 875
Abs Type Approved	Yes
46 Cfr Compliant	Yes

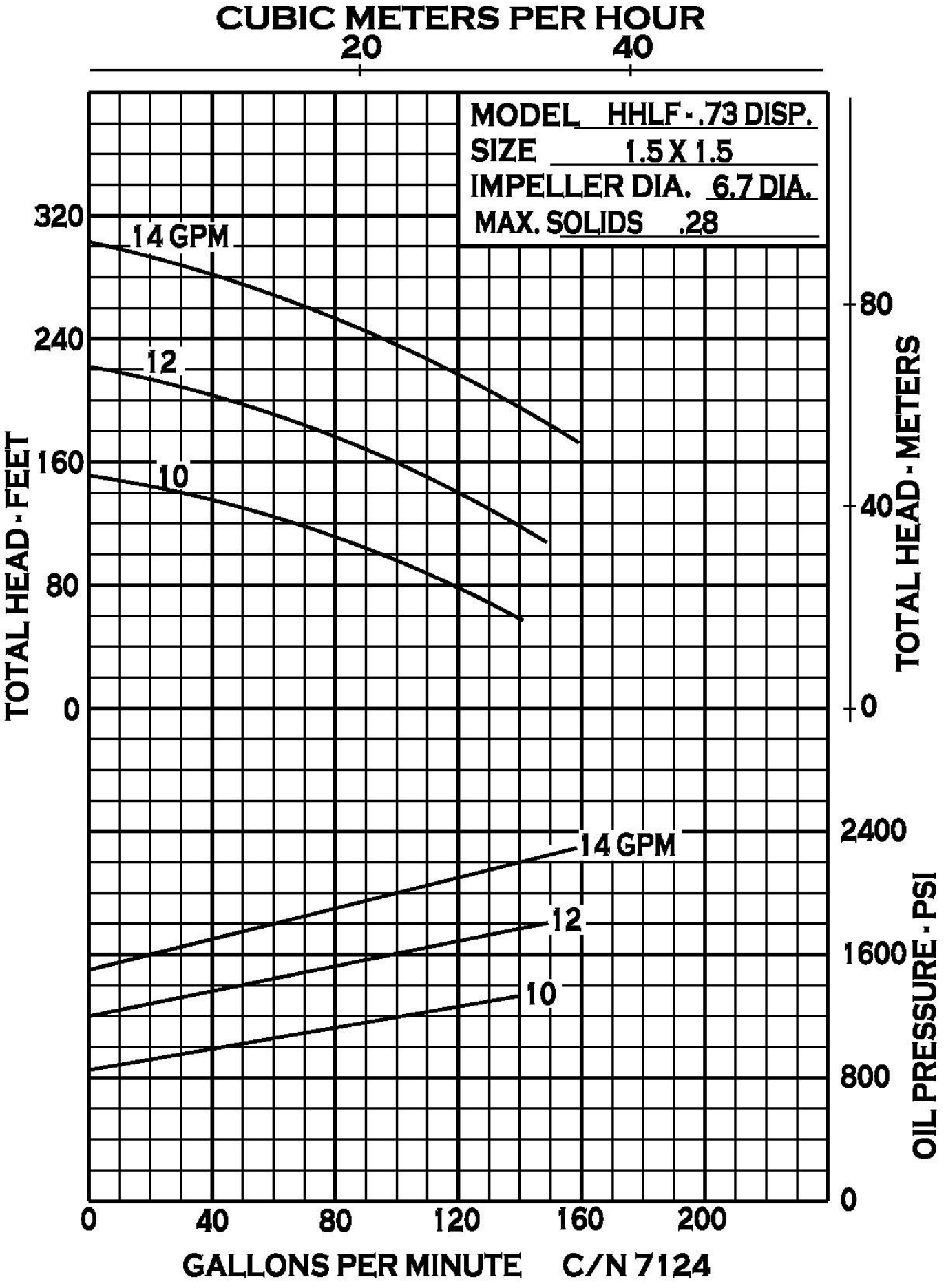

34800 BENNETT - FRASER, MI 48026-1686
(586) 293-8240 - FAX (586) 293-8469
(800) 563-8006 - www.mppumps.com

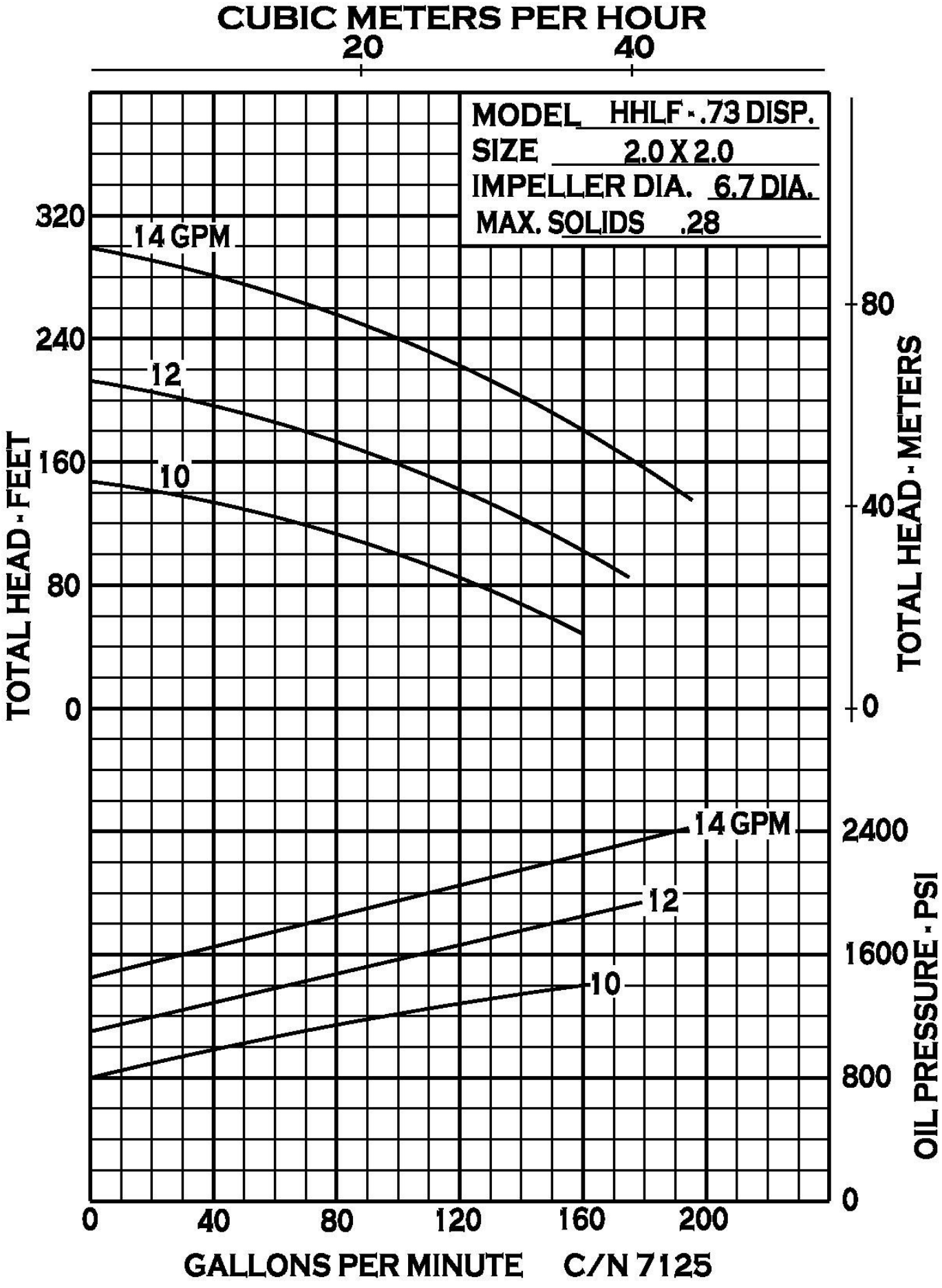

34800 BENNETT - FRASER, MI 48026-1686
(586) 293-8240 - FAX (586) 293-8469
(800) 563-8006 - www.mppumps.com

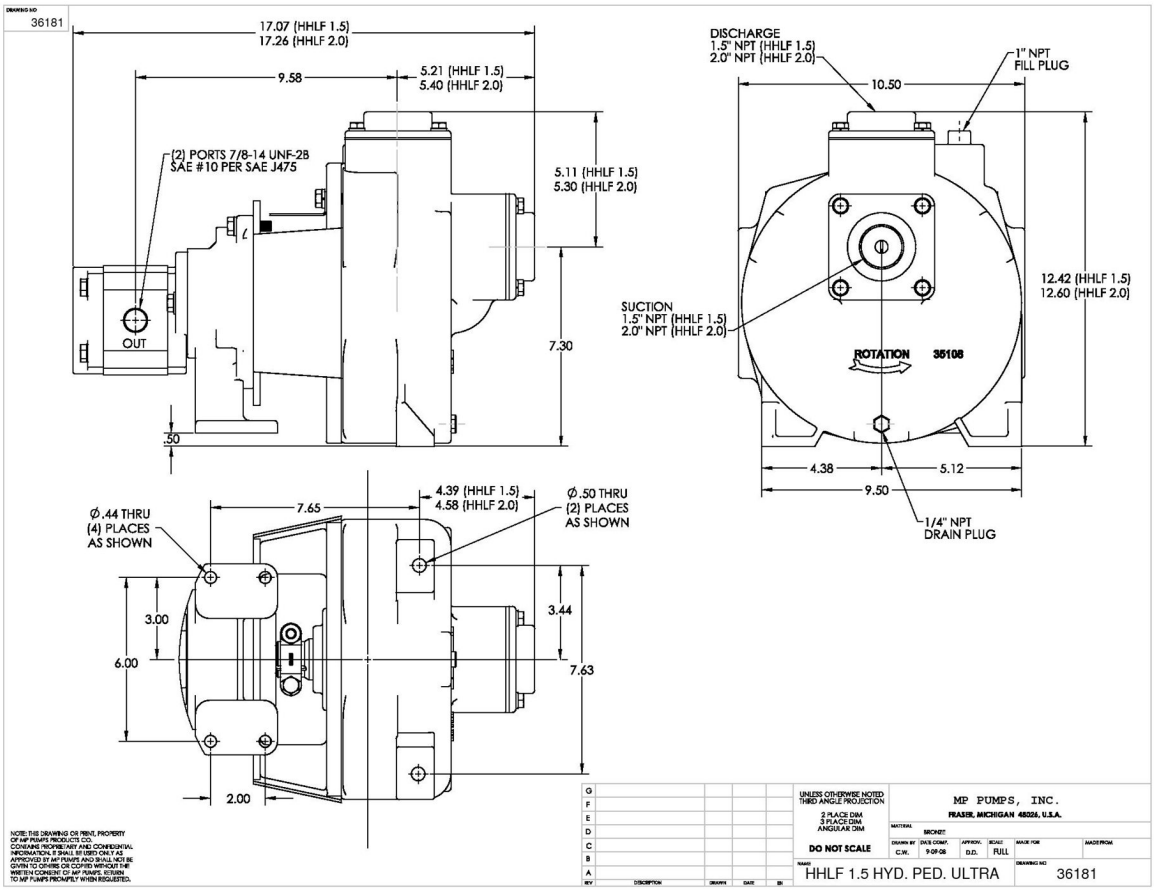
DRAWING NO
36181
17.07 (HHLF 1.5)
17.26 (HHLF 2.0)
9.58
5.21 (HHLF 1.5)
5.40 (HHLF 2.0)
(2) PORTS 7/8-14 UNF-2B
SAE #10 PER SAE J475
OUT
5.11 (HHLF 1.5)
5.30 (HHLF 2.0)
7.30
.50
DISCHARGE
1.5" NPT (HHLF 1.5)
2.0" NPT (HHLF 2.0)
1" NPT
FILL PLUG
10.50
12.42 (HHLF 1.5)
12.60 (HHLF 2.0)
SUCTION
1.5" NPT (HHLF 1.5)
2.0" NPT (HHLF 2.0)
ROTATION
35108
4.38
5.12
9.50
1/4" NPT
DRAIN PLUG
Ø.44 THRU
(4) PLACES
AS SHOWN
7.65
4.39 (HHLF 1.5)
4.58 (HHLF 2.0)
Ø.50 THRU
(2) PLACES
AS SHOWN
3.00
6.00
3.44
7.63
2.00
NOTE: THIS DRAWING OR PRINT, PROPERTY OF MP PUMPS PRODUCTS CO., CONTAINS PROPRIETARY AND CONFIDENTIAL INFORMATION. IT SHALL BE USED ONLY AS APPROVED BY MP PUMPS AND SHALL NOT BE GIVEN TO OTHERS OR COPIED WITHOUT THE WRITTEN CONSENT OF MP PUMPS. RETURN TO MP PUMPS PROMPTLY WHEN REQUESTED.
UNLESS OTHERWISE NOTED
THIRD ANGLE PROJECTION
2 PLACE DIM
3 PLACE DIM
ANGULAR DIM
DO NOT SCALE
MP PUMPS, INC.
FRASER, MICHIGAN 48026, U.S.A.
MATERIAL
BRONZE
DRAWN BY C.W.
DATE COMP. 9-09-08
APPROV. D.D.
SCALE FULL
MADE FOR
MADE FROM
NAME
HHLF 1.5 HYD. PED. ULTRA
DRAWING NO
36181

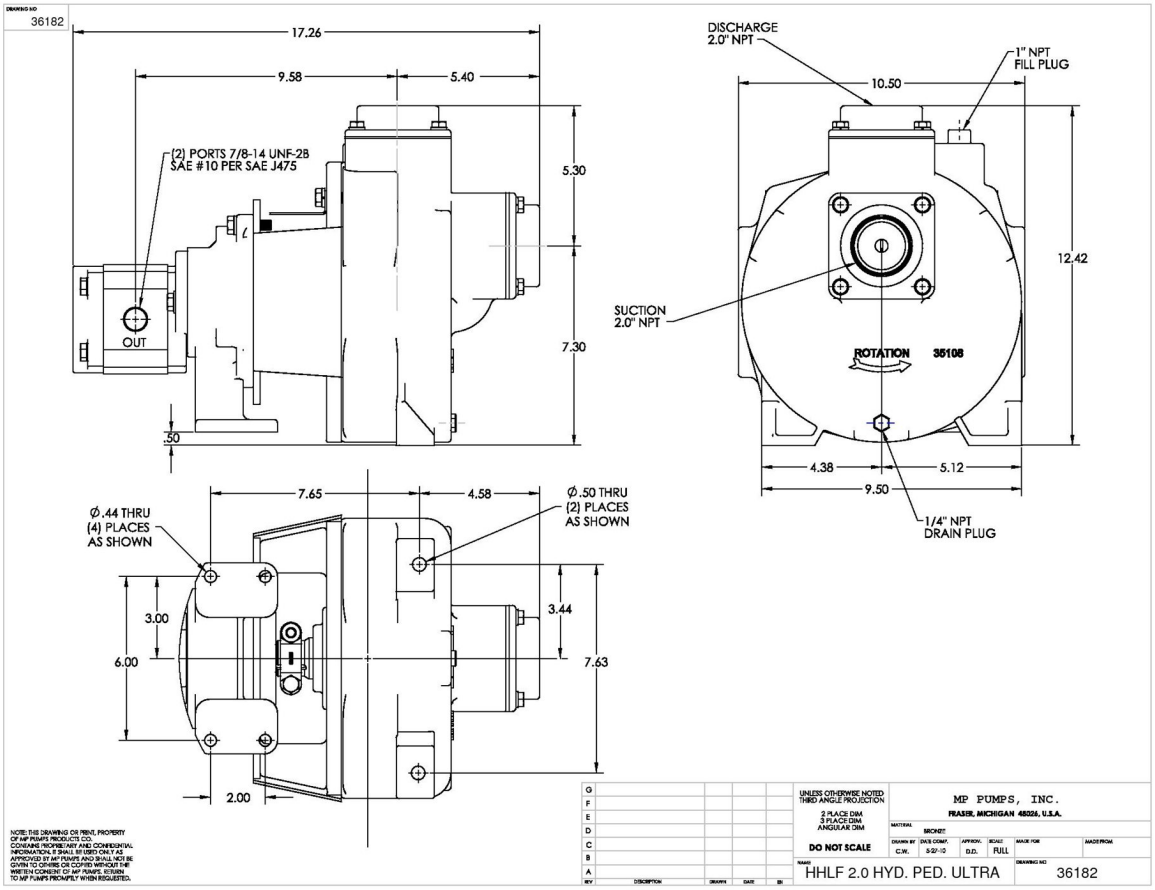
DRAWING NO
36182
17.26
9.58
5.40
(2) PORTS 7/8-14 UNF-2B
SAE #10 PER SAE J475
OUT
5.30
7.30
.50
DISCHARGE
2.0" NPT
1" NPT
FILL PLUG
10.50
12.42
SUCTION
2.0" NPT
ROTATION
35108
4.38
5.12
9.50
1/4" NPT
DRAIN PLUG
Ø.44 THRU
(4) PLACES
AS SHOWN
7.65
4.58
Ø.50 THRU
(2) PLACES
AS SHOWN
3.00
6.00
3.44
7.63
2.00
NOTE: THIS DRAWING OR PRINT, PROPERTY OF MP PUMPS PRODUCTS CO., CONTAINS PROPRIETARY AND CONFIDENTIAL INFORMATION. IT SHALL BE USED ONLY AS APPROVED BY MP PUMPS AND SHALL NOT BE GIVEN TO OTHERS OR COPIED WITHOUT THE WRITTEN CONSENT OF MP PUMPS. RETURN TO MP PUMPS PROMPTLY WHEN REQUESTED.
UNLESS OTHERWISE NOTED
THIRD ANGLE PROJECTION
2 PLACE DIM
3 PLACE DIM
ANGULAR DIM
DO NOT SCALE
MP PUMPS, INC.
FRASER, MICHIGAN 48026, U.S.A.
MATERIAL
BRONZE
DRAWN BY C.W.
DATE COMP. 5-27-10
APPROV. D.D.
SCALE FULL
MADE FOR
MADE FROM
NAME
HHLF 2.0 HYD. PED. ULTRA
DRAWING NO
36182

36182

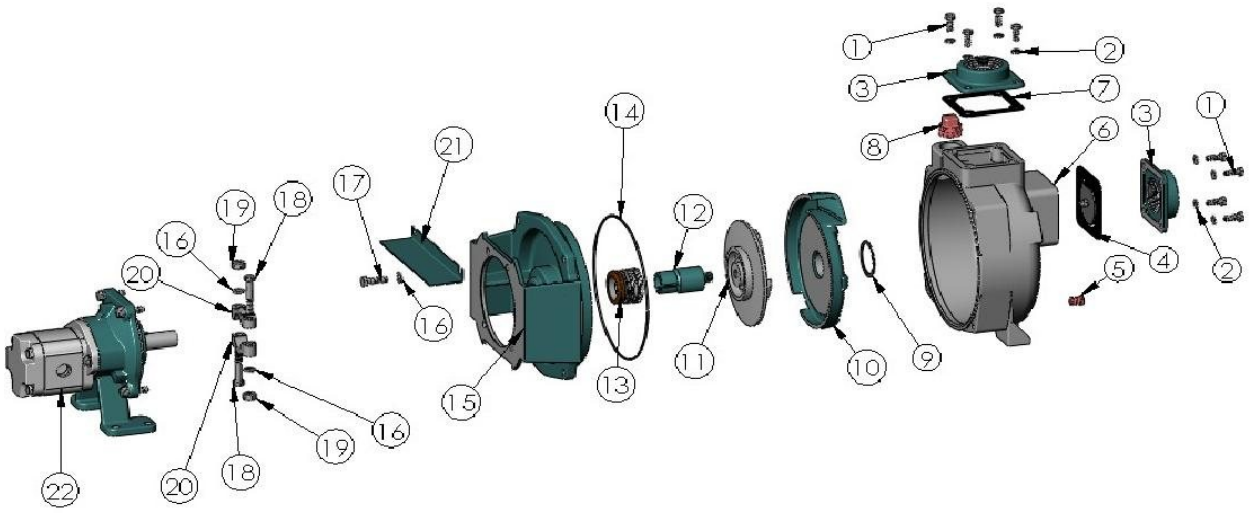

	ITEM NO.	PART NO.	DESCRIPTION	QTY.		ITEM NO.	PART NO.	DESCRIPTION	QTY.
	1	21242	CAPSCREW - 5/16"-18 X 7/8" - S.S.	8		11	35919	IMPELLER - Ø6.70 - CAST	1
	2	21238	LOCKWASHER - 5/16" - S.S.	8		12	28825	DRIVE SLEEVE -Ø1.00 - S.S.	1
	3	22311	FLANGES- 2" N.P.T. - CAST	2	*	13	29533	SEAL - Ø1.5 - T-21	1
*	4	23022	FLAPPER ASSEMBLY	1	*	14	28907	O-RING - AS-568-175 - VITON	1
	5	41475	PIPE PLUG - 1/4" N.P.T. - STL	1		15	29092	ADAPTER - CAST	1
	6	35109	HOUSING - CAST	1		16	21266	LOCKWASHER - 3/8" - S.S.	6
*	7	22256	GASKET - BUNA	1		17	21274	CAPSCREW - 3/8"-16 X 1.25 - S.S.	4
	8	41483	PIPE PLUG - 1" N.P.T. - STL	1		18	21269	CAPSCREW - 3/8"-16 X 2.25 - S.S.	2
	9	28908	GASKET - VITON	1		19	21268	HEXNUT - 3/8"-16 - S.S.	2
	10	31988	VOLUTE - CAST	1	*	20	22356	CLAMP Ø1.00 - S.S.	2
						21	29192	CLAMP GUARD - STEEL	1
						22	28551	PEDESTAL ASSY. - ULTRA	1

SUGGESTED REPLACEMENT PARTS

36183

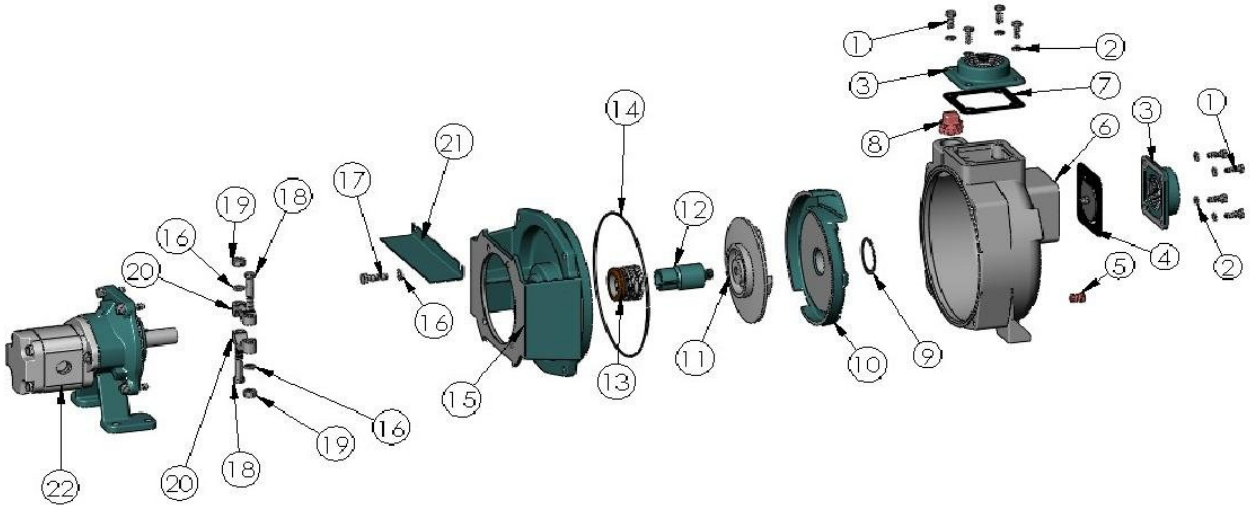

	ITEM NO.	PART NO.	DESCRIPTION	QTY.		ITEM NO.	PART NO.	DESCRIPTION	QTY.
	1	21242	CAPSCREW - 5/16"-18 X 7/8" - S.S.	8		11	35919	IMPELLER - Ø6.70 - CAST	1
	2	21238	LOCKWASHER - 5/16" - S.S.	8		12	28825	DRIVE SLEEVE -Ø1.00 - S.S.	1
	3	22266	FLANGES- 1.5" N.P.T. - CAST	2	*	13	29533	SEAL - Ø1.5 - T-21	1
*	4	23022	FLAPPER ASSEMBLY	1	*	14	28907	O-RING - AS-568-175 - VITON	1
	5	41475	PIPE PLUG - 1/4" N.P.T. - STL	1		15	29092	ADAPTER - CAST	1
	6	35109	HOUSING - CAST	1		16	21266	LOCKWASHER - 3/8" - S.S.	6
*	7	22256	GASKET - BUNA	1		17	21274	CAPSCREW - 3/8"-16 X 1.25 - S.S.	4
	8	41483	PIPE PLUG - 1" N.P.T. - STL	1		18	21269	CAPSCREW - 3/8"-16 X 2.25 - S.S.	2
	9	28908	GASKET - VITON	1		19	21268	HEXNUT - 3/8"-16 - S.S.	2
	10	31988	VOLUTE - CAST	1	*	20	22356	CLAMP Ø1.00 - S.S.	2
						21	29192	CLAMP GUARD - STEEL	1
						22	28551	PEDESTAL ASSY. - ULTRA	1

SUGGESTED REPLACEMENT PARTS

36181

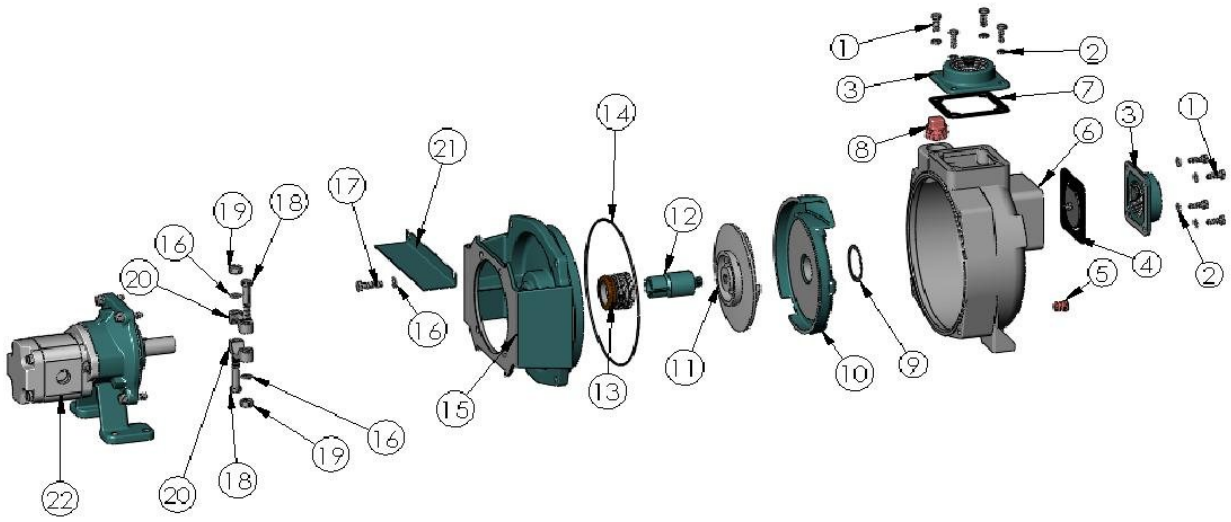

	ITEM NO.	PART NO.	DESCRIPTION	QTY.		ITEM NO.	PART NO.	DESCRIPTION	QTY.
	1	21242	CAPSCREW - 5/16"-18 X 7/8" - S.S.	8		11	35921	IMPELLER - Ø6.70 - BRONZE	1
	2	21238	LOCKWASHER - 5/16" - S.S.	8		12	28825	DRIVE SLEEVE -Ø1.00 - S.S.	1
	3	22265	FLANGES- 1.5" N.P.T. - BRONZE	2	*	13	29533	SEAL - Ø1.5 - T-21	1
*	4	23022	FLAPPER ASSEMBLY	1	*	14	28907	O-RING - AS-568-175 - VITON	1
	5	21186	PIPE PLUG - 1/4" N.P.T. - BRONZE	1		15	29093	ADAPTER - BRONZE	1
	6	35118	HOUSING - BRONZE	1		16	21266	LOCKWASHER - 3/8" - S.S.	6
*	7	22256	GASKET - BUNA	1		17	21274	CAPSCREW - 3/8"-16 X 1.25 - S.S.	4
	8	22378	PIPE PLUG - 1" N.P.T. - BRONZE	1		18	21269	CAPSCREW - 3/8"-16 X 2.25 - S.S.	2
	9	28908	GASKET - VITON	1		19	21268	HEXNUT - 3/8"-16 - S.S.	2
	10	33453	VOLUTE - BRONZE	1	*	20	22356	CLAMP Ø1.00 - S.S.	2
						21	29192	CLAMP GUARD - STEEL	1
						22	28551	PEDESTAL ASSY. - ULTRA	1

SUGGESTED REPLACEMENT PARTS

36180

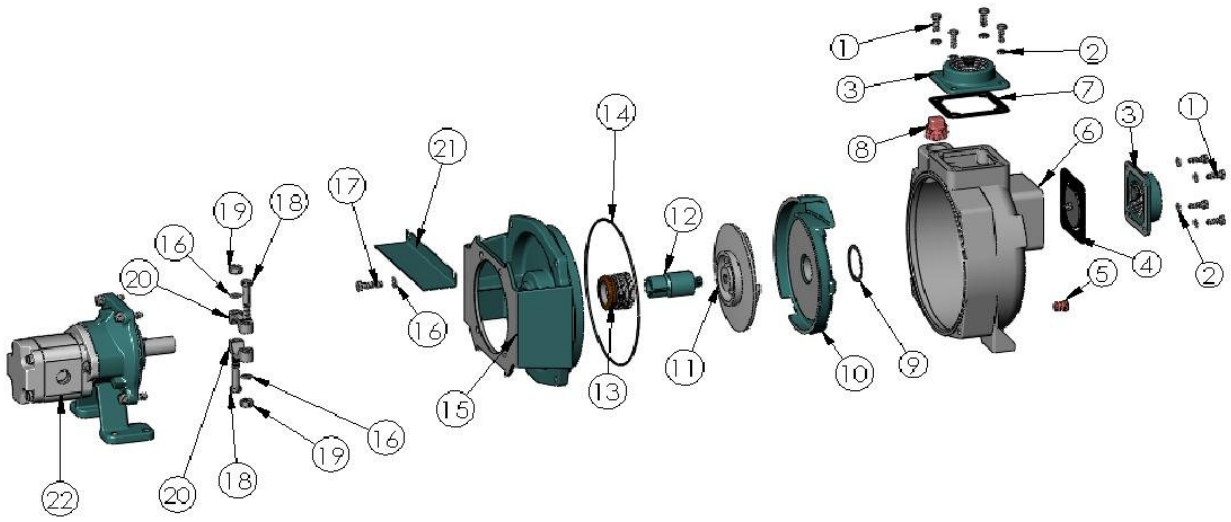

	ITEM NO.	PART NO.	DESCRIPTION	QTY.		ITEM NO.	PART NO.	DESCRIPTION	QTY.
	1	21242	CAPSCREW - 5/16"-18 X 7/8" - S.S.	8		11	35921	IMPELLER - Ø6.70 - BRONZE	1
	2	21238	LOCKWASHER - 5/16" - S.S.	8		12	28825	DRIVE SLEEVE -Ø1.00 - S.S.	1
	3	22310	FLANGES- 2" N.P.T. - BRONZE	2	*	13	29533	SEAL - Ø1.5 - T-21	1
*	4	23022	FLAPPER ASSEMBLY	1	*	14	28907	O-RING - AS-568-175 - VITON	1
	5	21186	PIPE PLUG - 1/4" N.P.T. - BRONZE	1		15	29093	ADAPTER - BRONZE	1
	6	35118	HOUSING - BRONZE	1		16	21266	LOCKWASHER - 3/8" - S.S.	6
*	7	22256	GASKET - BUNA	1		17	21274	CAPSCREW - 3/8"-16 X 1.25 - S.S.	4
	8	22378	PIPE PLUG - 1" N.P.T. - BRONZE	1		18	21269	CAPSCREW - 3/8"-16 X 2.25 - S.S.	2
	9	28908	GASKET - VITON	1		19	21268	HEXNUT - 3/8"-16 - S.S.	2
	10	33453	VOLUTE - BRONZE	1	*	20	22356	CLAMP Ø1.00 - S.S.	2
						21	29192	CLAMP GUARD - STEEL	1
						22	28551	PEDESTAL ASSY. - ULTRA	1

SUGGESTED REPLACEMENT PARTS