CALL TOLL FREE 877-742-2878 FOR SALES AND SUPPORT
Return to BurtProcess.com

HTO™ 80

1-1/2" x 1-1/4" End Suction Centrifugal Hot Oil Pump

HTO80 is a patented, unique centrifugal pump designed for high temperature applications, such as the plastics, chemical, food and processing industries. The pump can be used in horizontal or vertical positions and is available with or without an electric motor. It is designed to greatly reduce the temperature at the seal by utilizing ambient air temperature which greatly increases seal life.

Want to learn more about using pumps with heat transfer fluids? Click here to view “Using Pumps with Heat Transfer Fluids” an article featured in Process Heating Magazine written by MP Pumps’ Chief Engineer.

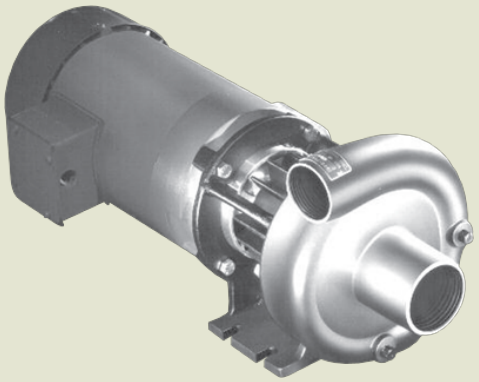

Application

- Industrial
- OEM

Drive Sleeve

- Hardened 303 stainless steel

Features

- Isolated air cooled seal chamber

SPECIFICATIONS:

Suction And Discharge	1-1/2" x 1-1/4" NPT or flat flange option
Materials Of Construction	Ductile iron
Flow	Up to 85 GPM
Head Feet	Up to 130'
Impeller	5.9" steel, enclosed
Motor	Up to 3 HP
Drive Options	Close coupled 56C, Close coupled 145TC, Pedestal, PumPAK® (without motor)
Seal	Carbon / silicon carbide / Viton
Temperature	650°F max

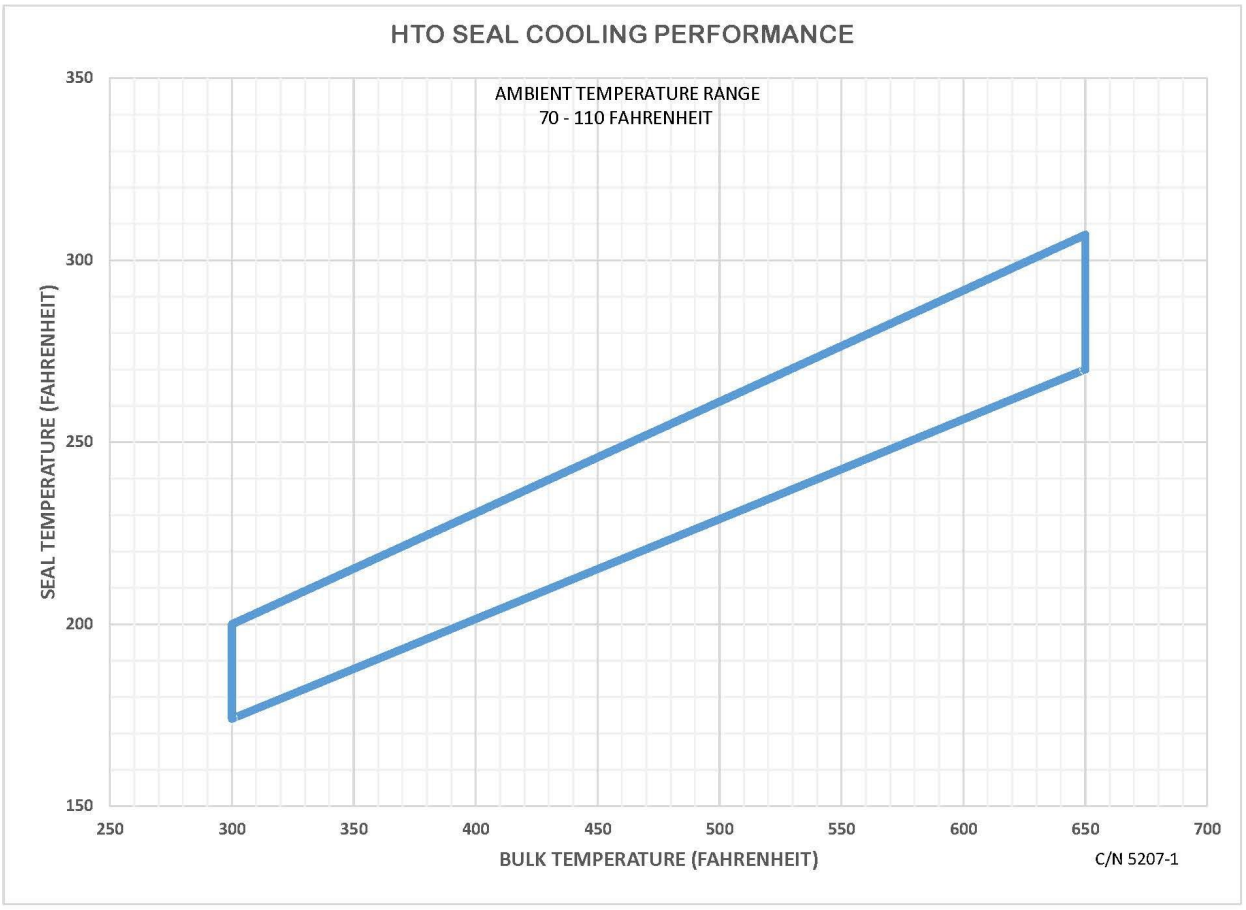

34800 BENNETT - FRASER, MI 48026-1686
(586) 293-8240 - FAX (586) 293-8469
(800) 563-8006 - www.mppumps.com

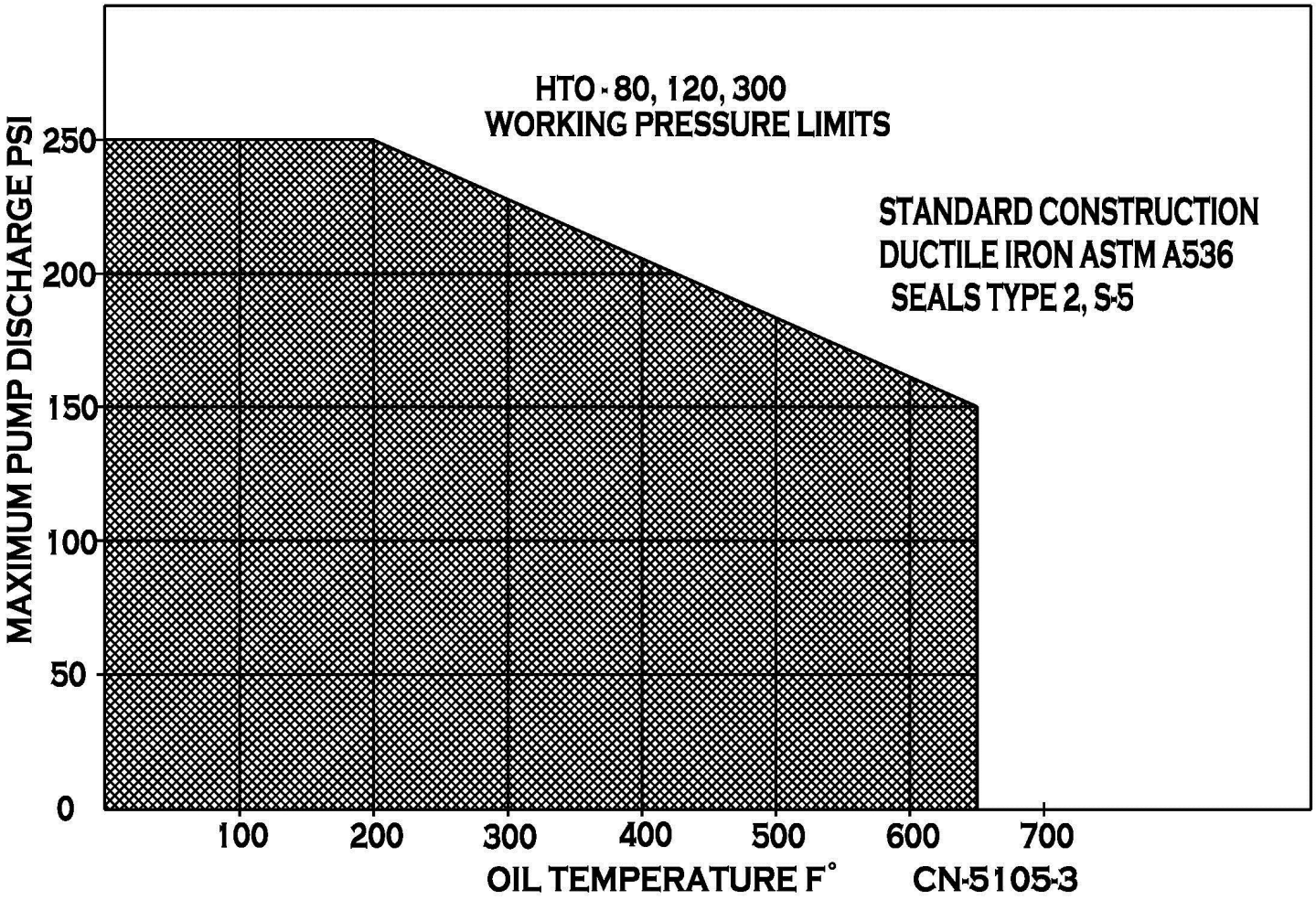

34800 BENNETT - FRASER, MI 48026-1686
(586) 293-8240 - FAX (586) 293-8469
(800) 563-8006 - www.mppumps.com

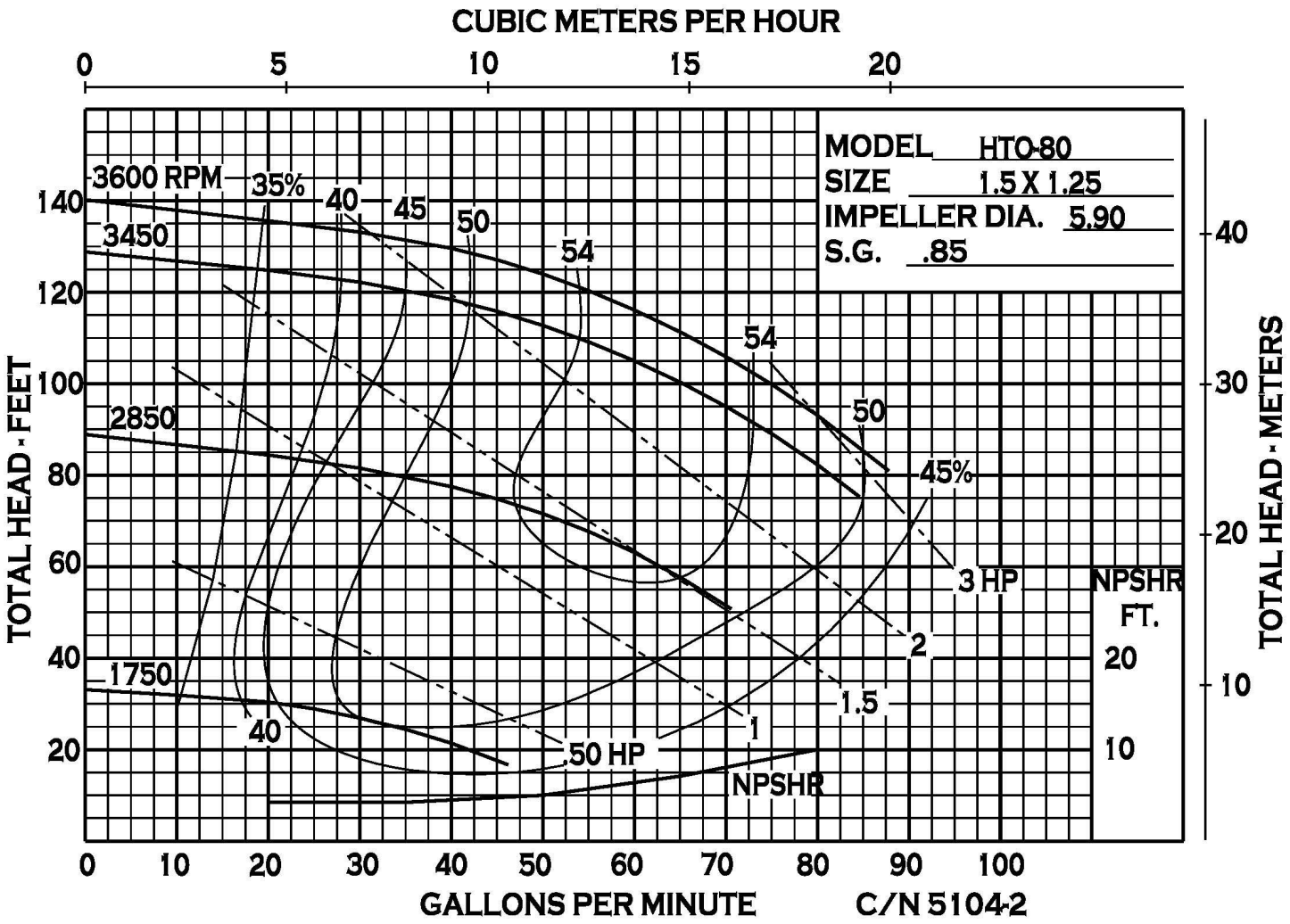

34800 BENNETT - FRASER, MI 48026-1686
(586) 293-8240 - FAX (586) 293-8469
(800) 563-8006 - www.mppumps.com

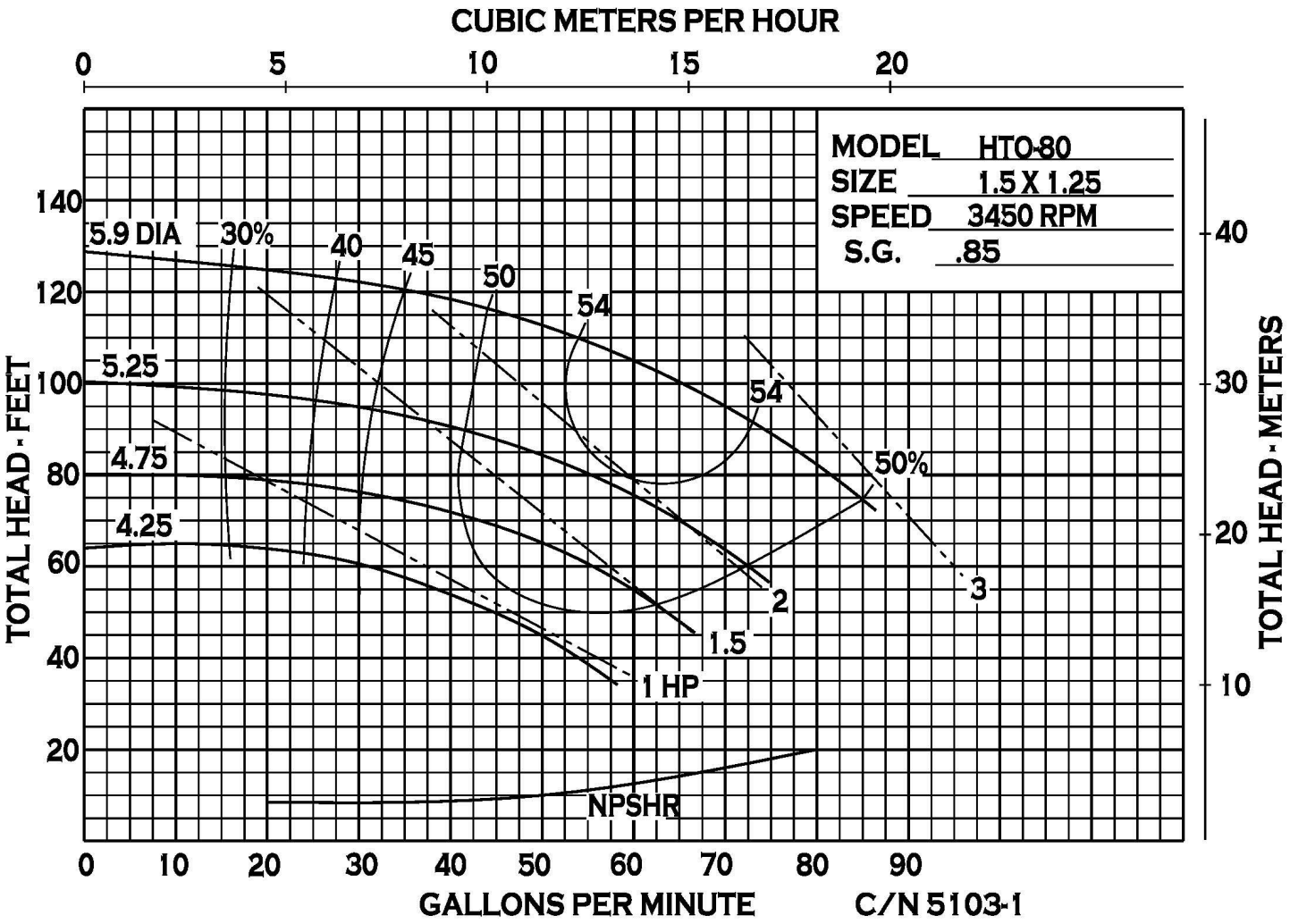

34800 BENNETT - FRASER, MI 48026-1686
(586) 293-8240 - FAX (586) 293-8469
(800) 563-8006 - www.mppumps.com

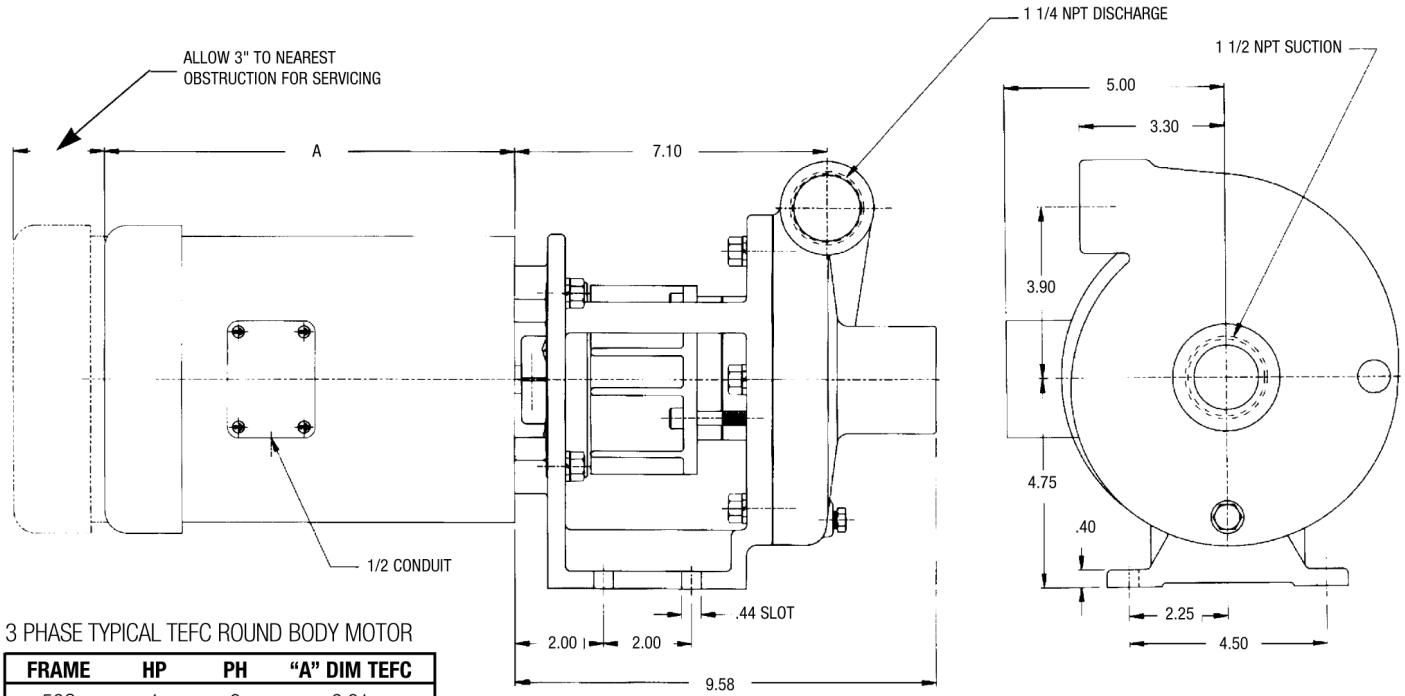

3 PHASE TYPICAL TEFC ROUND BODY MOTOR

FRAME	HP	PH	"A" DIM TEFC
56C	1	3	9.31
56C	1.5	3	9.94
56C	2	3	11.25
56C	3	3	12.12

Pump dimensions certifiable for construction purposes.
Motor dimensions dependent upon motor manufacturer.

34800 BENNETT - FRASER, MI 48026-1686
(586) 293-8240 - FAX (586) 293-8469
(800) 563-8006 - www.mppumps.com

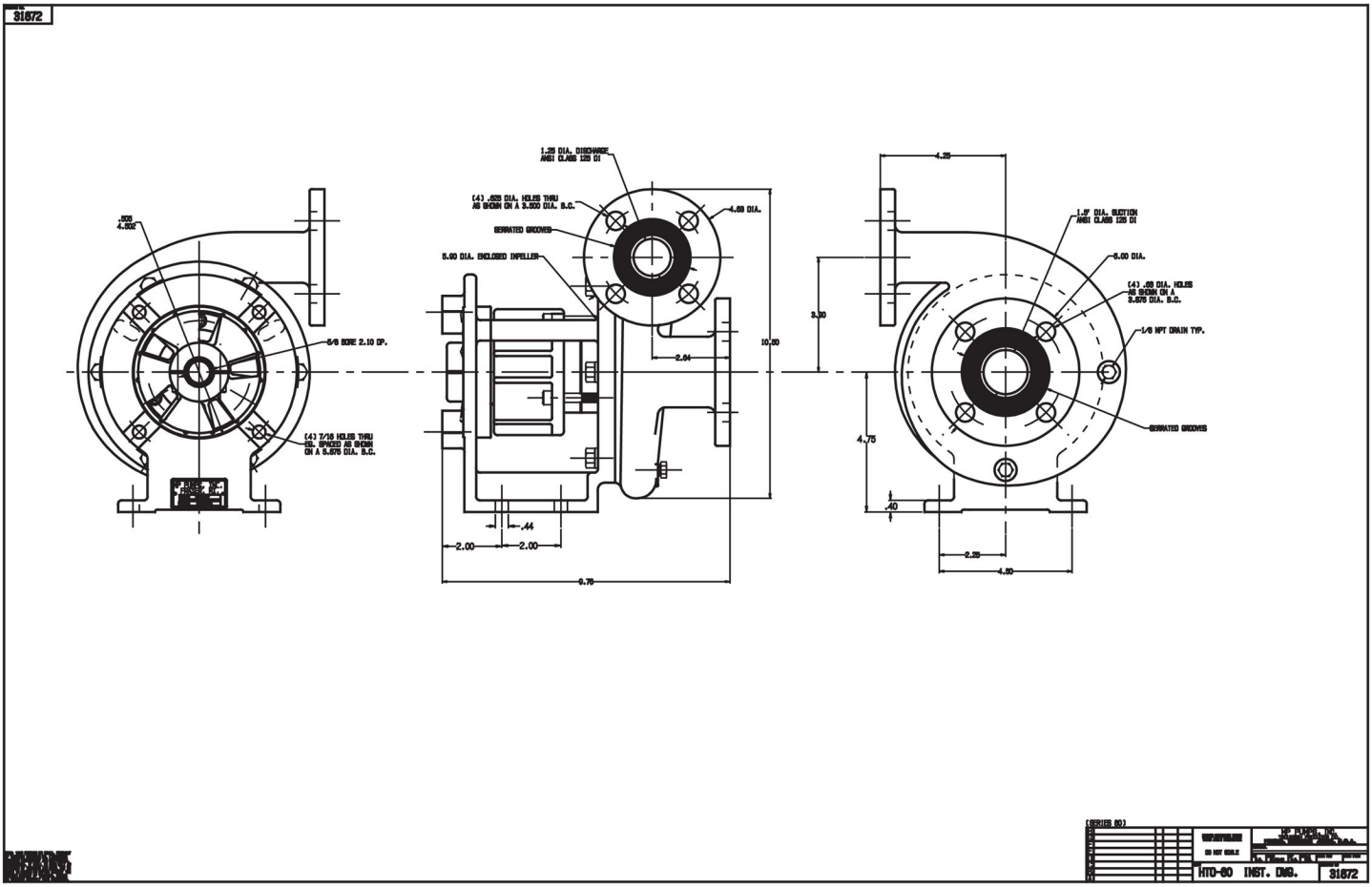

34800 BENNETT - FRASER, MI 48026-1686
(586) 293-8240 - FAX (586) 293-8469
(800) 563-8006 - www.mppumps.com

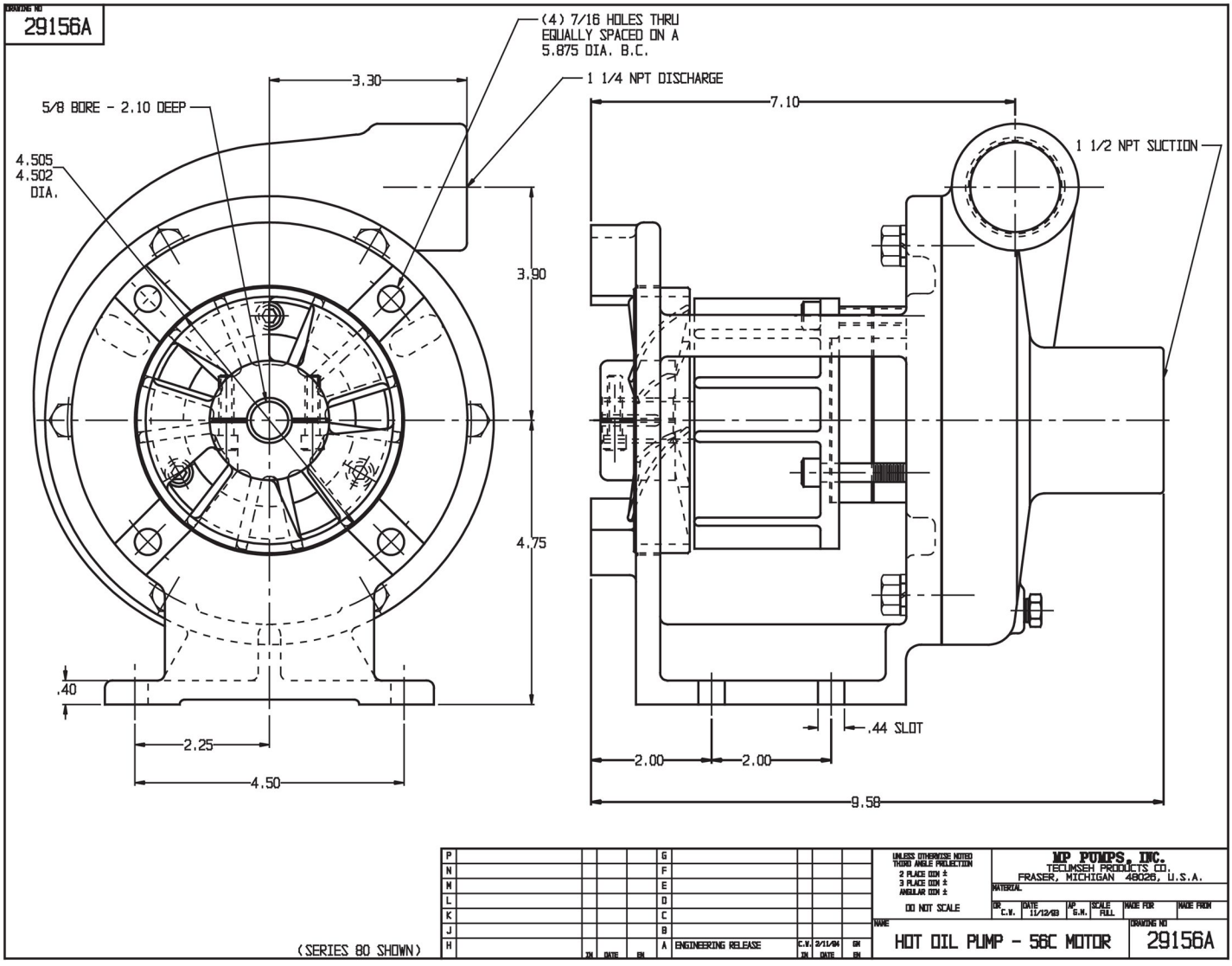

34800 BENNETT - FRASER, MI 48026-1686
(586) 293-8240 - FAX (586) 293-8469
(800) 563-8006 - www.mppumps.com

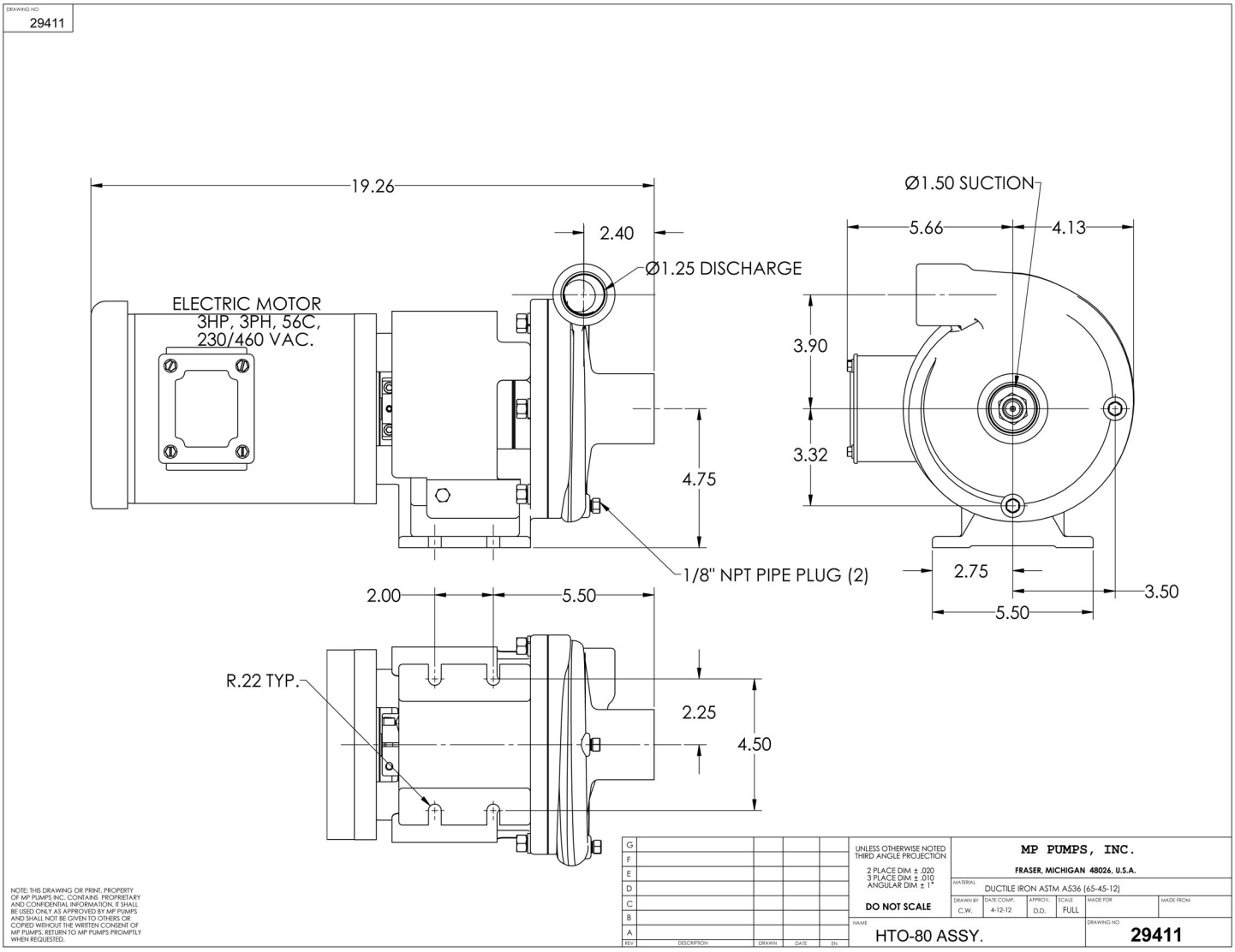

34800 BENNETT - FRASER, MI 48026-1686
(586) 293-8240 - FAX (586) 293-8469
(800) 563-8006 - www.mppumps.com

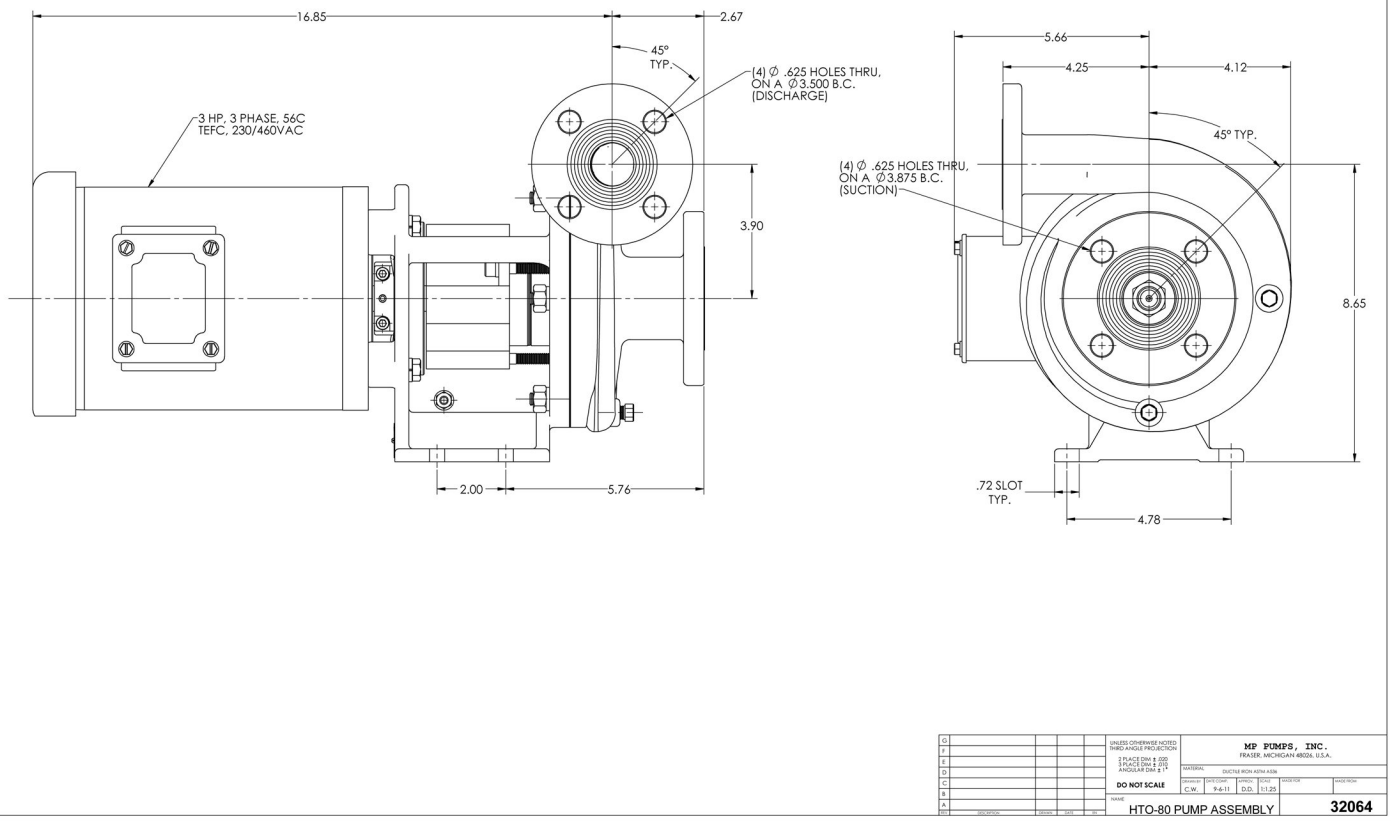

34800 BENNETT - FRASER, MI 48026-1686
(586) 293-8240 - FAX (586) 293-8469
(800) 563-8006 - www.mppumps.com

29156

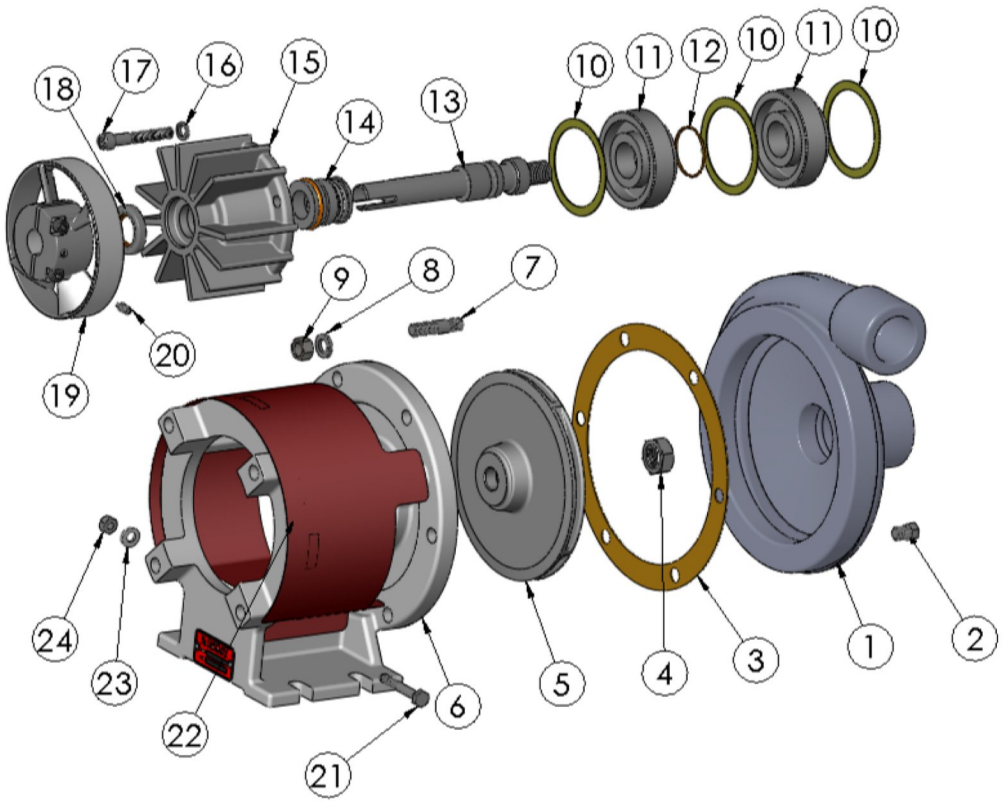

ITEM	PART NO.	DESCRIPTION	QTY.
1	25666	HOUSING- DUCTILE IRON	1
2	21585	PIPE PLUG- 1/8 NPT ZPS	2
* 3	31518	GASKET- HOUSING	1
4	22655	HEX JAM NUT ZPS - 5/8-18	1
5	25910	IMPELLER 5.90 DIA- STL.	1
6	29160	ADAPTOR- DUCTILE IRON	1
7	21261	STUD SS: 3/8-16 X 1.63"	6
8	21266	LOCKWASHER SS- 3/8"	6
9	21268	HEXNUT SS: 3/8-16	6
* 10	29165	GASKET- ISOLATOR	3
* 11	29158	ISOLATOR	2
* 12	29230	O-RING - VITON	1

ITEM	PART NO.	DESCRIPTION	QTY.
13	29166	DRIVE SLEEVE S.S. - 56C	1
* 14	29168	SEAL ASSY - 3/4 T-21 CAR/SIC	1
15	29162	SEAL HOUSING D - HTO80	1
16	29765	WASHER FLAT STL	3
17	29178	CAPSCREW STL: 5/16-18 X 2"	3
* 18	29167	LIP SEAL- VITON	1
19	29164	FAN CLAMP- DUCTILE IRON	1
20	33417	SET SCREW STL: 1/4-28	1
21	33810	CAPSCREW ZPS - 5/16-18 X 1.75	1
22	33273	SHIELD ZPS - HTO80 & 120	1
23	27261	WASHER STL - 7.2MM	1
24	21241	HEXNUT S.S. - 1/4-20	1

* RECOMMENDED REPLACEMENT PARTS

34800 BENNETT - FRASER, MI 48026-1686
(586) 293-8240 - FAX (586) 293-8469
(800) 563-8006 - www.mppumps.com

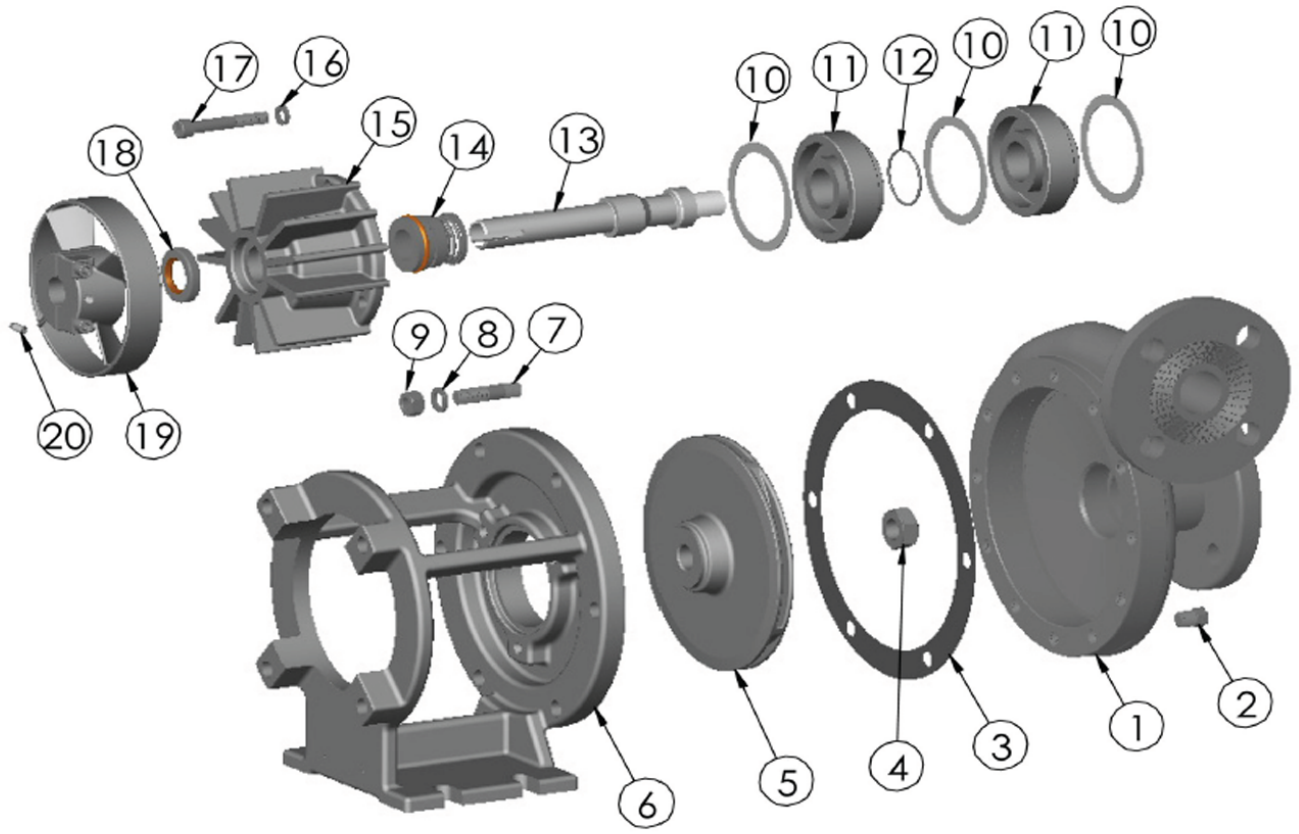

ITEM	PART NO.	DESCRIPTION	QTY.
1	31871	HOUSING- DUCTILE IRON	1
2	21585	PIPE PLUG- 1/8 NPT ZPS	2
3	31518	GASKET- HOUSING	1
4	22655	HEX JAM NUT: 5/8-18	1
5	25910	IMPELLER 5.90 DIA- DUCTILE IRON	1
6	29160	ADAPTOR- DUCTILE IRON	1
7	21261	STUD SS: 3/8-16 X 1.63"	6
8	21266	LOCKWASHER SS- 3/8"	6
9	21268	HEXNUT SS: 3/8-16	6
10	29165	GASKET- ISOLATOR	3

ITEM	PART NO.	DESCRIPTION	QTY.
11	29158	ISOLATOR	2
12	29230	O-RING: VITON	1
13	29166	DRIVE SLEEVE: 56C	1
14	29168	SEAL ASSEMBLY	1
15	29162	SEAL HOUSING- DUCTILE IRON	1
16	29765	WASHER STL	3
17	29178	CAPSCREW STL: 5/16-18	3
18	29167	LIP SEAL- VITON	1
19	29164	FAN CLAMP- DUCTILE IRON	1
20	33417	SET SCREW STL: 1/4-28	1