CALL TOLL FREE 877-742-2878 FOR SALES AND SUPPORT
Return to BurtProcess.com

HTW 120

2" x 1-1/2" End Suction Centrifugal Hot Water Pump

HTW 120 is a patented, unique centrifugal pump specifically designed for high temperature process manufacturing applications using hot water, ethylene glycol, propylene glycol and triethylene glycol. The Tempuflo HTW Series utilizes an isolated seal chamber, which is effectively cooled by both a cooling loop (heat exchanger) and by a fan clamp which couples the unit to the shaft of a standard NEMA C Face frame motor.

The isolator technology combined with the heat exchanger allows the seal cavity to reach a maximum and seal chamber temperature of 170°F (77°C) while the process temperature is at 400°F (204°C). This lower seal temperature greatly increases seal life, which means less down time for the end user.

Discharge port location can be provided as either Horizontal or Vertical position.

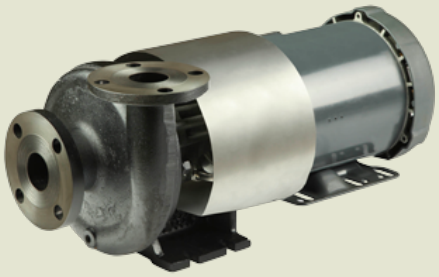

Application

- Industrial
- OEM

SPECIFICATIONS:

Suction And Discharge	2" x 1-1/2" NPT or 150# flat flange
Materials Of Construction	Ductile iron
Flow	Up to 200 GPM
Head Feet	Up to 135'
Impeller	5.06" Cast iron, enclosed
Motor	Up to 5 HP
Drive Options	Close coupled 145TC, Close coupled 184C, Pedestal, PumPAK® (without motor)
Seal	Carbon / silicon carbide / Viton

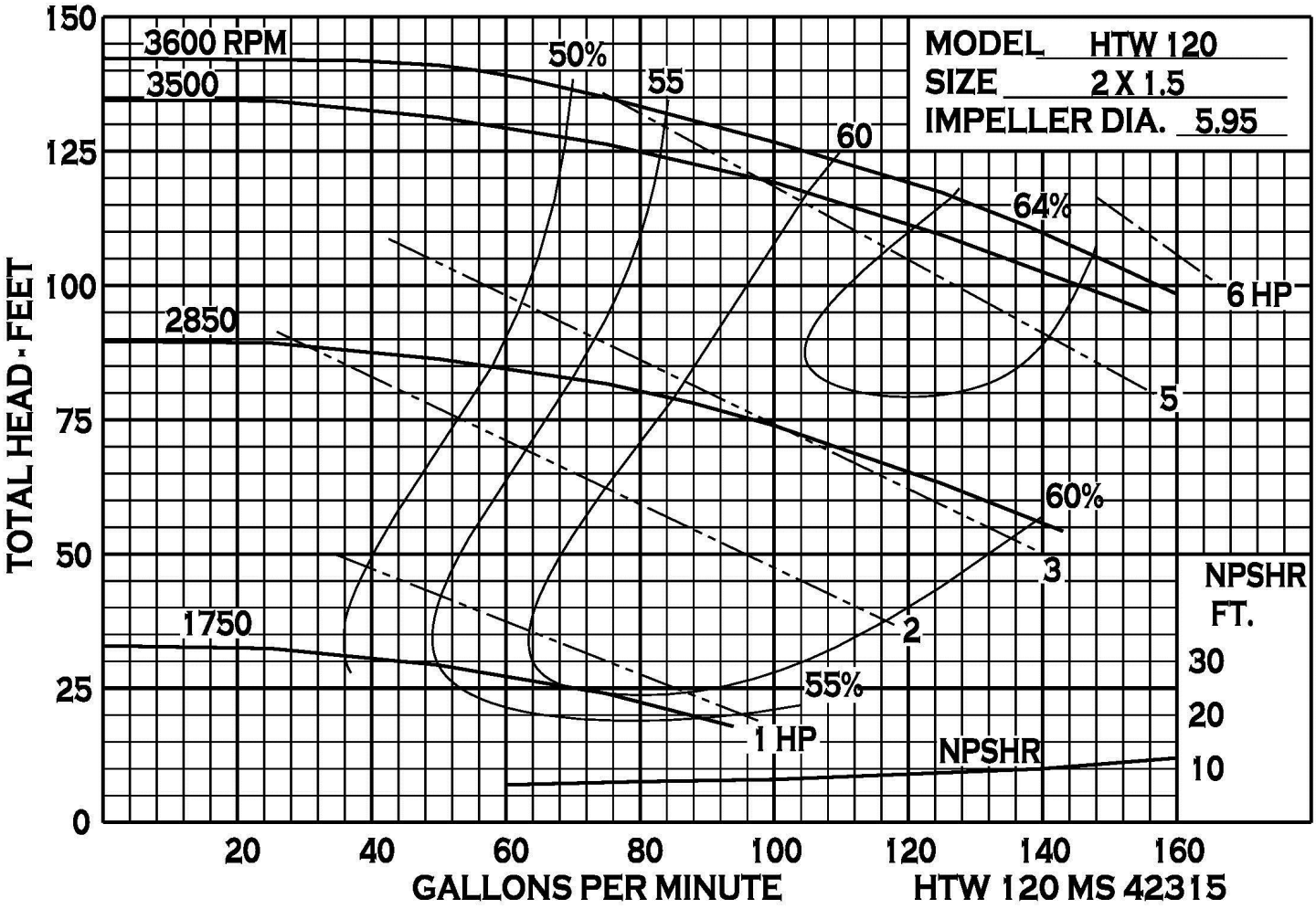

34800 BENNETT - FRASER, MI 48026-1686
(586) 293-8240 - FAX (586) 293-8469
(800) 563-8006 - www.mppumps.com

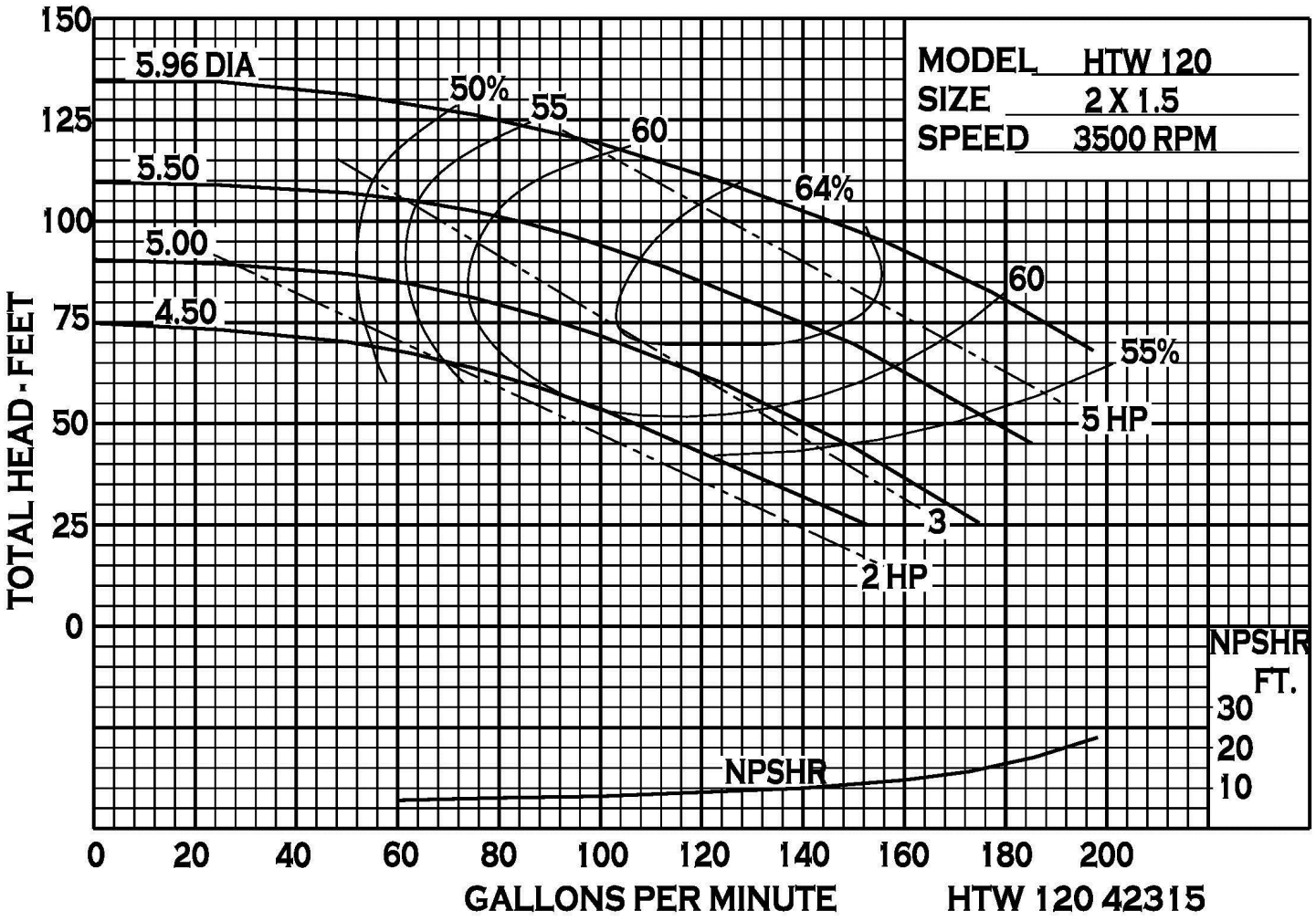

34800 BENNETT - FRASER, MI 48026-1686
(586) 293-8240 - FAX (586) 293-8469
(800) 563-8006 - www.mppumps.com

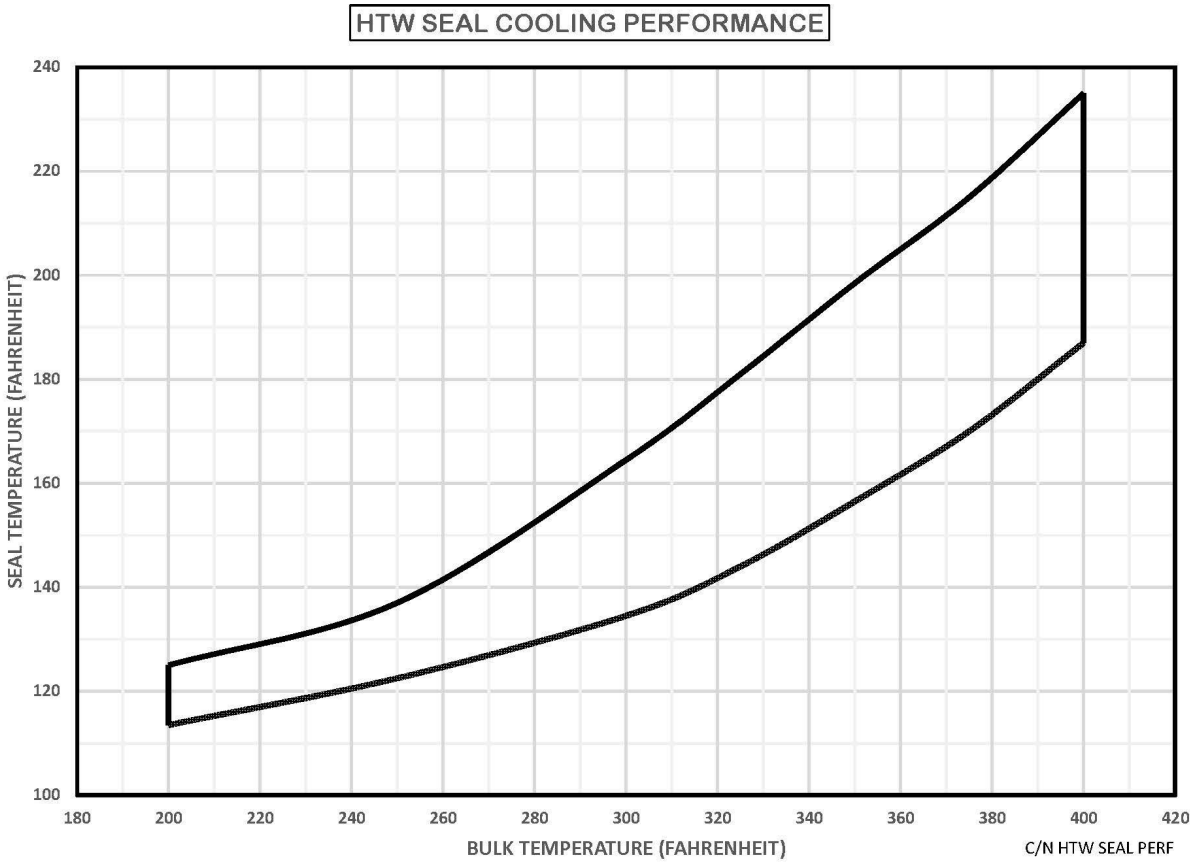

34800 BENNETT - FRASER, MI 48026-1686
(586) 293-8240 - FAX (586) 293-8469
(800) 563-8006 - www.mppumps.com

HTW Pressure Temperature Limits

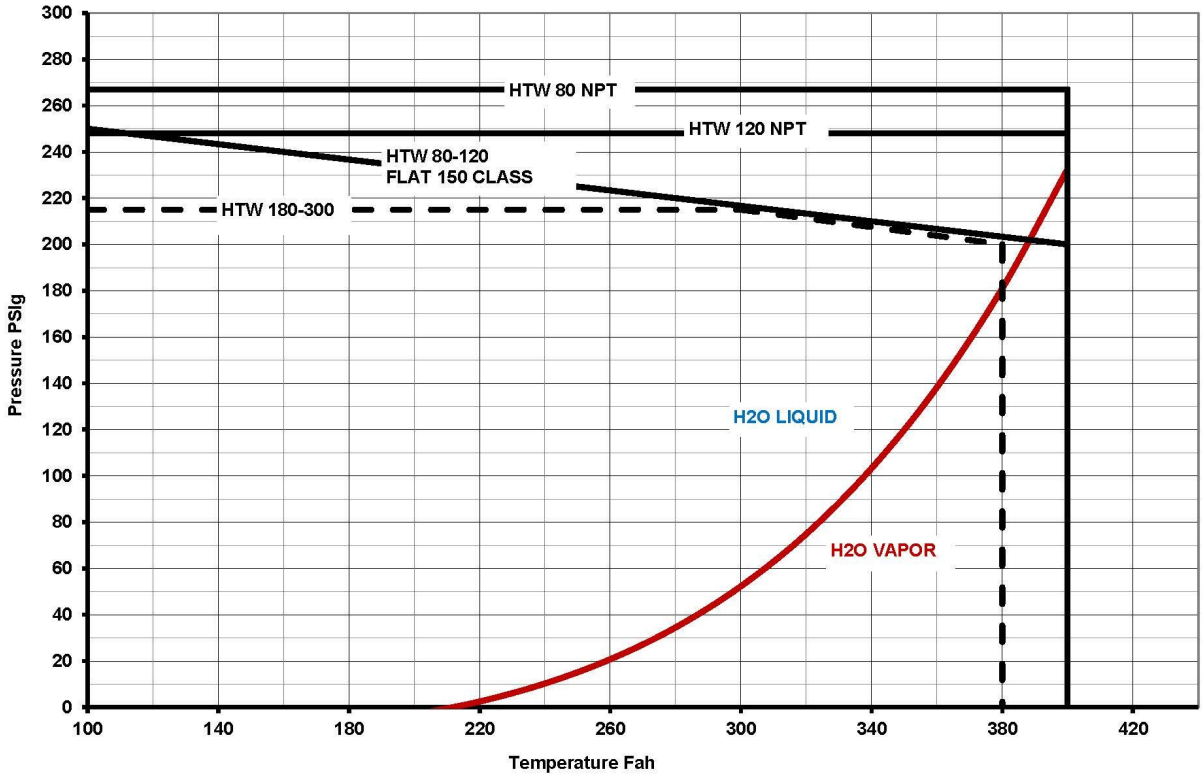

34800 BENNETT - FRASER, MI 48026-1686
(586) 293-8240 - FAX (586) 293-8469
(800) 563-8006 - www.mppumps.com

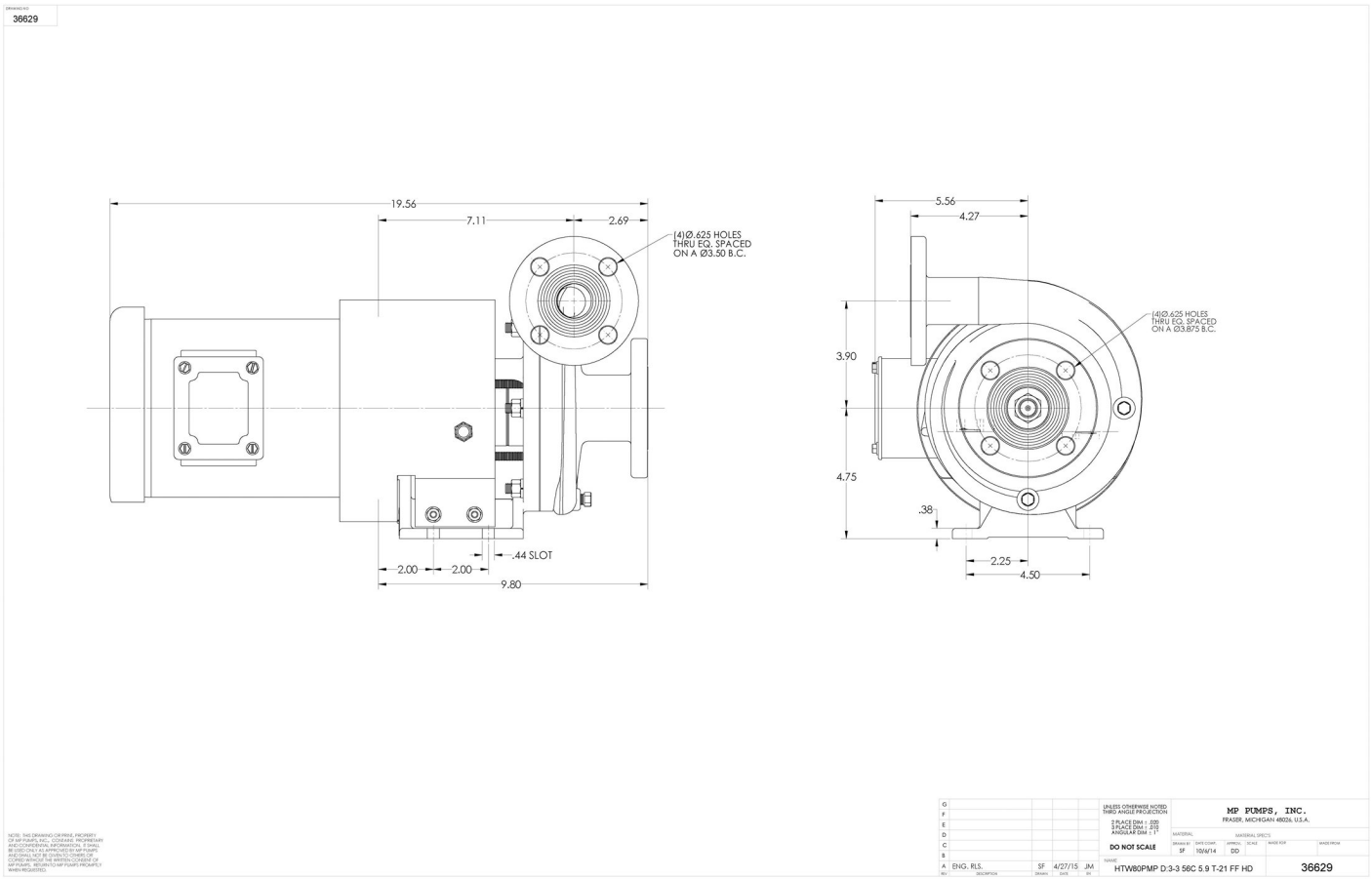
36629
19.56
7.11
2.69
(4)Ø.625 HOLES
THRU EQ. SPACED
ON A Ø3.50 B.C.
.44 SLOT
2.00
2.00
9.80
5.56
4.27
(4)Ø.625 HOLES
THRU EQ. SPACED
ON A Ø3.875 B.C.
3.90
4.75
.38
2.25
4.50
MP PUMPS, INC.
FRASER, MICHIGAN 48026, U.S.A.
DO NOT SCALE
ENG. RLS.
SF 4/27/15 JM
HTW80PMP D:3-3 56C 5.9 T-21 FF HD
36629

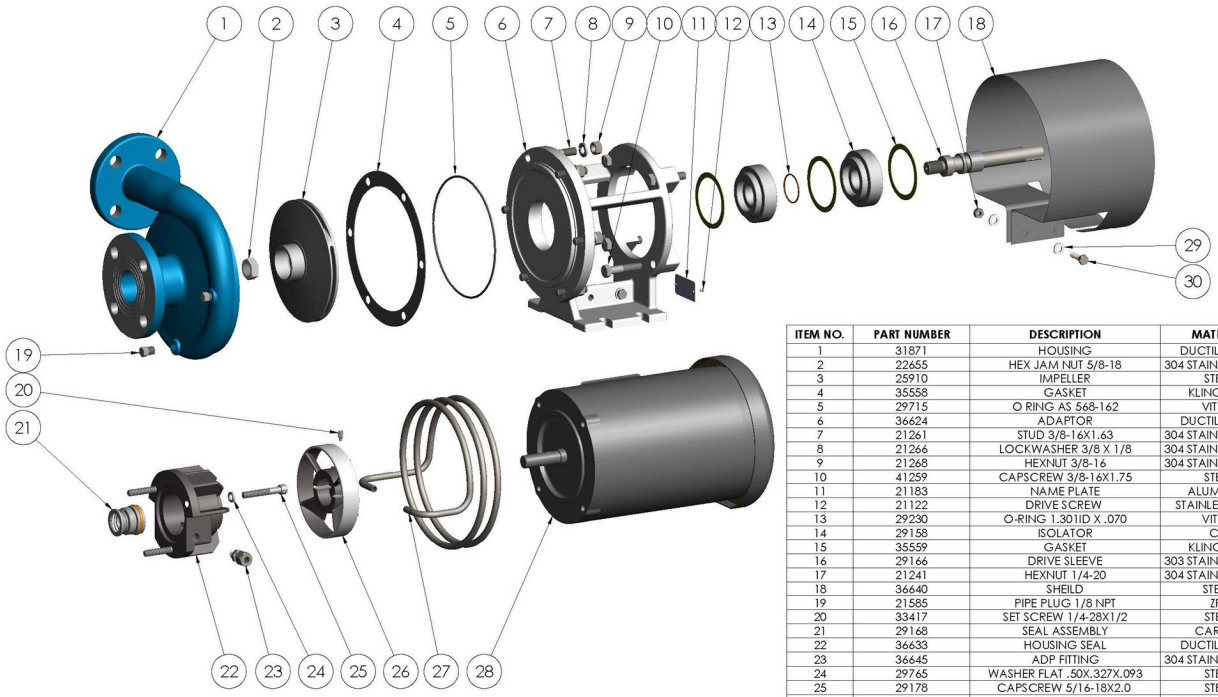

ITEM NO.	PART NUMBER	DESCRIPTION	MATERIAL	QTY.
1	31871	HOUSING	DUCTILE IRON	1
2	22655	HEX JAM NUT 5/8-18	304 STAINLESS STEEL	1
3	25910	IMPELLER	STEEL	1
4	35558	GASKET	KLINGERSIL	1
5	29715	O RING AS 568-162	VITON	1
6	36624	ADAPTOR	DUCTILE IRON	1
7	21261	STUD 3/8-16X1.63	304 STAINLESS STEEL	6
8	21266	LOCKWASHER 3/8 X 1/8	304 STAINLESS STEEL	6
9	21268	HEXNUT 3/8-16	304 STAINLESS STEEL	6
10	41259	CAPSCREW 3/8-16X1.75	STEEL	4
11	21183	NAME PLATE	ALUMINUM	1
12	21122	DRIVE SCREW	STAINLESS STEEL	2
13	29230	O-RING 1.301ID X .070	VITON	1
14	29158	ISOLATOR	CG	2
15	35559	GASKET	KLINGERSIL	3
16	29166	DRIVE SLEEVE	303 STAINLESS STEEL	1
17	21241	HEXNUT 1/4-20	304 STAINLESS STEEL	2
18	36640	SHEILD	STEEL	1
19	21585	PIPE PLUG 1/8 NPT	ZPS	2
20	33417	SET SCREW 1/4-28X1/2	STEEL	1
21	29168	SEAL ASSEMBLY	CAR/SIC	1
22	36633	HOUSING SEAL	DUCTILE IRON	1
23	36645	ADP FITTING	304 STAINLESS STEEL	2
24	29765	WASHER FLAT .50X.327X.093	STEEL	3
25	29178	CAPSCREW 5/16-18X2.0	STEEL	3
26	29164	CLAMP FAN	DUCTILE IRON	1
27	36641	HE COIL	304 STAINLESS STEEL	1
28	26197	ELECTRIC MOTOR 3HP, 3PH, 56C	STD.	1
29	27261	WASHER	STEEL	4
30	33563	CAPSCREW 1/4-20X1	304 STAINLESS STEEL	2

NOTE: THE DRAWING OR PRINT PROPERTY OF MP PUMPS, INC., CONTAINS PROPRIETARY AND CONFIDENTIAL INFORMATION. IT SHALL BE USED ONLY AS AUTHORIZED BY MP PUMPS AND SHALL NOT BE GIVEN TO OTHERS OR COPIED WITHOUT THE WRITTEN CONSENT OF MP PUMPS. RETURN TO MP PUMPS PROMPTLY WHEN REQUESTED.

UNLESS OTHERWISE NOTED THIRD ANGLE PROJECTION
2 PLACE DIM ± .020
3 PLACE DIM ± .010
ANGULAR DIM ± 1°
DO NOT SCALE

MP PUMPS, INC.
FRASER, MICHIGAN 48026, U.S.A.

MATERIAL | MATERIAL SPECS
DRAWN BY SF | DATE CHKD 10/8/14 | APPR'D DD | SCALE | SHEET TYPE | SHEET REV.

NAME: HTW80PMP D:3-3 56C 5.9 T-21 FF HD

36629

REV	DESCRIPTION	DRAWN	DATE	BY
A	ENG. RLS.	SF	4/27/15	JM